Installation and Operation

6,000 Pound Capacity
Portable Two-Post Lift

Safety

Your new lift was designed and built with safety in mind; however, your overall safety can be increased by proper training and thoughtful operation. DO NOT operate or repair this machine without reading and understanding this manual and the important safety instructions shown inside.

As the owner/operator of this equipment, it is your responsibility to forward this manual to all operators of this equipment and to be sure that they fully understand and comprehend it contents inside. Failure to operate this equipment as directed may result in injury or death.

Shipping Damage Claims

When this equipment is shipped, title passes to the purchaser upon receipt from the carrier. Consequently, claims for the material damaged in shipment must be made by the purchaser against the transportation company at the time shipment is received.

24-MONTH LIMITED WARRANTY

1. DURATION: From the date of purchase by the original purchaser. Any Dannmar MaxJax™ lift system: Two-Year warranty on the lift structure and other associated structural components; One-Year warranty on the power unit and hydraulic cylinders, and other assembly components such as valves, hoses, fittings etc. Against defects in material or workmanship under normal use and service, from the date of installation or from the date of shipment by Dannmar or a Dannmar distributor whichever comes first.

2. WHO GIVES THIS WARRANTY (WARRANTOR): Dannmar Inc., 646 Flinn Ave., Moorpark, CA 93021

3. WHO RECEIVES THIS WARRANTY (PURCHASER): The original purchaser (other than for purpose of resale).

4. WHAT PRODUCTS ARE COVERED BY THIS WARRANTY: Any Dannmar MaxJax lift system.

5. WHAT IS COVERED UNDER THIS WARRANTY: Manufacturer defects due to material and workmanship with the exceptions noted below.

6. WHAT IS NOT COVERED UNDER THIS WARRANTY:

A. ANY INCIDENTAL, INDIRECT, OR CONSEQUENTIAL LOSS, DAMAGE, OR EXPENSE THAT MAY RESULT FROM ANY DEFECT, FAILURE, OR MALFUNCTION OF DANNMAR INC PRODUCT.
B. Any failure that results from an accident, purchaser's abuse, neglect or failure to operate products in accordance with instructions provided in the owner's manual(s) supplied.
C. Pre-delivery service, i.e. assembly, oil, etc.
D. Items or service normally required to maintain the product: i.e. lubricants, rubber pads, hoses that become worn, other wear items, etc.
E. Additional items not covered under this warranty:
a. Any component damaged in shipment or any failure caused by installing or operating unit under conditions not in accordance with installation and operation guidelines or damaged by contact with tools or surroundings.
b. Pump or valve failure caused by rain, excessive humidity, corrosive environments or other contaminants.
c. Cosmetic defects that do not interfere with lift system functionality.
d. Damage due to incorrect voltage or improper wiring.

Other items not listed but considered general wear parts.
a. hoses worn or kinked
b. rubber lift contact pads

7. RESPONSIBILITIES OF WARRANTOR UNDER THIS WARRANTY: Repair or replace, at Warrantor's option, lift or component which is defective, has malfunctioned and/or failed to conform within duration of the warranty period. Dannmar Inc. will pay reasonable labor costs for the first 12 months only on parts returned as previously described.

8. RESPONSIBILITIES OF PURCHASER UNDER THIS WARRANTY:
A. Provide dated proof of purchase and maintenance records.
B. Lift or components must be delivered or shipped to the nearest Dannmar Authorized Service Center. Freight costs, if any, must be borne by the purchaser.
C. Use reasonable care in the operation and maintenance of the products as described in the owner's manual(s).

9. WHEN WARRANTOR WILL PERFORM REPAIR OR REPLACEMENT UNDER THIS WARRANTY: Repair or replacement will be scheduled and serviced according to the normal work flow at the servicing location, and depending on the availability of replacement parts.

THESE WARRANTIES DO NOT EXTEND TO ANY COSMETIC DEFECT NOT INTERFERING WITH EQUIPMENT FUNCTIONALITY OR ANY INCIDENTAL, INDIRECT, OR CONSEQUENTIAL LOSS, DAMAGE, OR EXPENSE THAT MAY RESULT FROM ANY DEFECT, FAILURE, OR MALFUNCTION OF A DANNMAR PRODUCT OR THE BREACH OR DELAY IN PERFORMANCE OF THE WARRANTY.

This warranty is exclusive and in lieu of all other warranties expressed or implied. Dannmar makes no warranty on components and/or accessories furnished to Dannmar by third parties. These are warranted only to the extent of the original manufacturers warranty to Dannmar. Dannmar makes no warranty on other items not listed but may be considered general wear parts. Dannmar reserves the right to make design changes or add improvements to its product line without incurring any obligation to make such changes on product sold previously. Warranty adjustments within the above stated policies are based on the model and serial number of the equipment. This data must be furnished with all warranty

IMPORTANT NOTICE

Do not attempt to install this lift if you have never been trained on basic automotive lift installation procedures. Never attempt to lift components without proper lifting tools such as forklift or cranes. Stay clear of any moving parts that can fall and cause injury. These instructions must be followed to insure proper installation and operation of your lift. Failure to comply with these instructions can result in serious bodily harm and void product warranty. Manufacturer will assume no liability for loss or damage of any kind, expressed or implied resulting from improper installation or use of this product.

PLEASE READ ENTIRE MANUAL PRIOR TO INSTALLATION.

DEFINITIONS OF HAZARD LEVELS

Identify the hazard levels used in this manual with the following definitions and signal words:

DANGER

Watch for this symbol: It Means: Immediate hazards which will result in severe personal injury or death.

WARNING

Watch for this symbol: It Means: Hazards or unsafe practices which could result in severe personal injury or death.

CAUTION

Watch for this symbol: It Means: Hazards or unsafe practices which may result in minor personal injury, product or property damage.

OWNER'S RESPONSIBILITY

To maintain the lift and user safety, the responsibility of the owner is to read and follow these instructions:

- Follow all installation and operation instructions.
- Make sure installation conforms to all applicable Local, State, and Federal Codes, Rules, and Regulations; such as State and Federal OSHA Regulations and Electrical Codes.
- Carefully check the lift for correct initial function.
- Read and follow the safety instructions. Keep them readily available for machine operators.
- Make certain all operators are properly trained, know how to safely and correctly operate the unit, and are properly supervised.
- Allow unit operation only with all parts in place and operating safely.
- Carefully inspect the unit on a regular basis and perform all maintenance as required.
- Service and maintain the unit only with authorized or approved replacement parts.
- Keep all instructions permanently with the unit and all decals on the unit clean and visible.

BEFORE YOU BEGIN

Receiving:
The shipment should be thoroughly inspected as soon as it is received. The signed bill of lading is acknowledgement by the carrier of receipt in good condition of shipment covered by your invoice. If any of the goods called for on this bill of lading are shorted or damaged, do not accept them until the carrier makes a notation on the freight bill of the shorted or damaged goods. Do this for your own protection.

NOTIFY THE CARRIER AT ONCE if any hidden loss or damage is discovered after receipt and request the carrier to make an inspection. If the carrier will not do so, prepare a signed statement to the effect that you have notified the carrier (on a specific date) and that the carrier has failed to comply with your request.

IT IS DIFFICULT TO COLLECT FOR LOSS OR DAMAGE AFTER YOU HAVE GIVEN THE CARRIER A CLEAR RECEIPT. File your claim with the carrier promptly. Support your claim with copies of the bill of lading, freight bill, invoice, and photographs, if available. Our willingness to assist in helping you process your claim does not make Dannmar responsible for collection of claims or replacement of lost or damaged materials.

TABLE OF CONTENTS

Contents — Page No.

Warranty / Serial Number Information 2
Definitions of Hazard Levels 3
Owner's Responsibility 3
Before You Begin 3
Installer/Operator Agreement/ Protective Equipment 5
Introduction 6
Safety / Warning Instructions 6
Tools Required 7
Step 1 / Selecting Site 7
Step 2 / Floor Requirements 7
Concrete Specifications 7
Description of Parts 8
Step 3 / Mounting the Hydraulic Power Unit 9
Step 4 / Installing the Hydraulic Cylinders 10
Step 5 / Site Layout - Floor Plan 11
Step 6 / Installation of Power Drop Anchors. 12-13
Step 7 / Connecting Hydraulic Lines 14
Step 8 / Installing the Lift Arms 14
Step 9 / Hydraulic Power Unit Set Up 15
Step 10 / Lift Start Up / Final Adjustments 15-16
Optional Foot-Guard Installation 16
Step 12 / Lift Operation 17-18
Safe Lift Operation 19-20
Step 13 / Lift Removal 21
Step 14 / Re-Installation 21
Step 15 / Installation of Motorcycle Adapters 22
Troubleshooting Guide 23-25
Parts Diagrams 26-27

INSTALLER / OPERATOR PLEASE READ AND FULLY UNDERSTAND. BY PROCEEDING YOU AGREE TO THE FOLLOWING.

♦ I have visually inspected the site where the lift is to be installed and verified the concrete to be in good condition and free of cracks or other defects. I understand that installing a lift on cracked or defective concrete could cause lift failure resulting in personal injury or death.

♦ I understand that a level floor is required for proper installation and level lifting.

♦ I understand that I am responsible if my floor is of questionable slope and that I will be responsible for all charges related to pouring a new level concrete slab if required and any charges.

♦ I understand that the lifts are supplied with concrete fasteners meeting the criteria of the American National Standard "Automotive Lifts - Safety Requirements for Construction, Testing, and Validation" ANSI/ALI ALCTV-1998, and that I will be responsible for all charges related to any special regional structural and/or seismic anchoring requirements specified by any other agencies and/or codes such as the Uniform Building Code (UBC) and/or International Building Code (IBC).

♦ I will assume full responsibility for the concrete floor and condition thereof, now or later, where the above equipment is to be installed. Failure to follow danger, warning, and caution instructions may lead to serious personal injury or death to operator or bystander or damage to property.

♦ I understand that Dannmar/ MaxJax lifts are designed to be installed in indoor locations only. Failure to follow installation instructions may lead to serious personal injury or death to operator or bystander or damage to property or lift.

⚠ DANGER

Failure to follow danger, warning, and caution instructions may lead to serious personal injury or death to operator or bystander or damage to property.

⚠ WARNING

Please read entire manual prior to installation. Do not operate this machine until you read and understand all the dangers, warnings and cautions in this manual. For additional copies or further information, contact:

Dannmar Equipment
646 Flinn Ave. Suite A
Moorpark, CA. 93021
Tel: 1-877-432-6627
Fax: 1-805-530-1909

INSTALLER / OPERATOR PROTECTIVE EQUIPMENT

Personal protective equipment helps makes installation and operation safer, however, it does not take the place of safe operating practices. Always wear durable work clothing during any installation and/or service activity. Shop aprons or shop coats may also be worn, however loose fitting clothing should be avoided. Tight fitting leather gloves are recommended to protect technician hands when handling parts. Sturdy leather work shoes with steel toes and oil resistant soles should be used by all service personnel to help prevent injury during typical installation and operation activities.

Eye protection is essential during installation and operation activities. Safety glasses with side shields, goggles, or face shields are acceptable. Back belts provide support during lifting activities and are also helpful in providing worker protection. Consideration should also be given to the use of hearing protection if service activity is performed in an enclosed area, or if noise levels are high.

⚠ THIS SYMBOL POINTS OUT IMPORTANT SAFETY INSTRUCTIONS WHICH IF NOT FOLLOWED COULD ENDANGER THE PERSONAL SAFETY AND/OR PROPERTY OR YOURSELF AND OTHERS AND CAN CAUSE PERSONAL INJURY OR DEATH. READ AND FOLLOW ALL INSTRUCTIONS IN THIS MANUAL BEFORE ATTEMPTING TO OPERATE THIS MACHINE.

INTRODUCTION

1. Carefully remove the crating and packing materials. **CAUTION!** Be careful when cutting steel banding material as items may become loose and fall causing personal harm or injury.

2. Check the voltage, phase and proper amperage requirements for the motor shown on the motor plate. Wiring should be performed by a certified electrician only.

IMPORTANT SAFETY INSTRUCTIONS !

Read these safety instructions entirely!

IMPORTANT NOTICE !

Do not attempt to install this lift if you have never been trained on basic automotive lift installation procedures.
Never attempt to lift components without proper lifting tools such as forklift or cranes.
Stay clear of any moving parts that can fall and cause injury.

1. **READ AND UNDERSTAND** all safety warning procedures before operating lift.

2. **KEEP HANDS AND FEET CLEAR**. Remove hands and feet from any moving parts. Keep feet clear of lift when lowering. Avoid pinch points.

3. **KEEP WORK AREA CLEAN**. Cluttered work areas invite injuries.

4. Consider work area environment. Do not expose equipment to rain. **DO NOT** use in damp or wet locations. Keep area well lighted.

5. **ONLY TRAINED OPERATORS** should operate this lift. All non-trained personnel should be kept away from work area. Never let non-trained personnel come in contact with, or operate lift.

6. **USE LIFT CORRECTLY**. Use lift in the proper manner. Never use lifting adapters other than what is approved by the manufacturer.

7. **DO NOT** override self-closing lift controls.

8. **REMAIN CLEAR** of lift when raising or lowering vehicle.

9. **CLEAR AREA** if vehicle is in danger of falling.

10. **ALWAYS INSURE** that the safeties are engaged before any attempt is made to work on or near vehicle.

11. **DRESS PROPERLY**. Non-skid steel-toe footwear is recommended when operating lift.

12. **GUARD AGAINST ELECTRIC SHOCK**. This lift must be grounded while in use to protect the operator from electric shock. Never connect the green power cord wire to a live terminal. This is for ground only.

13. **DANGER!** The power unit used on this lift contains high voltage. Disconnect power at the receptacle before performing any electrical repairs. Secure plug so that it cannot be accidentally plugged in during service.

14. **WARNING! RISK OF EXPLOSION**. This equipment has internal arcing or sparking parts which should not be exposed to flammable vapors. This machine should not be located in a recessed area or below floor level.

15. **MAINTAIN WITH CARE**. Keep lift clean for better and safer performance. Follow manual for proper lubrication and maintenance instructions. Keep control handles and/or buttons dry, clean and free from grease and oil.

16. **STAY ALERT**. Watch what you are doing. Use common sense. Be aware.

17. **CHECK FOR DAMAGED PARTS**. Check for alignment of moving parts, breakage of parts or any condition that may affect its operation. Do not use lift if any component is broken or damaged.

18. **NEVER** remove safety related components from the lift. Do not use lift if safety related components are damaged or missing.

TOOLS REQUIRED

- Rotary Hammer Drill or Similar
- 5/8” Masonry Bit
- 7/8” Masonry Bit
- 4 Foot Level
- Open-End Wrench Set: SAE/Metric
- Socket And Ratchet Set: SAE/Metric
- Hex-Key / Allen Wrench Set
- Large Crescent Wrench
- Hammer
- Chalk Line
- Medium Flat Screwdriver
- Tape Measure: 25 Foot Minimum

IMPORTANT NOTICE !

These instructions must be followed to insure proper installation and operation of your lift.
Failure to comply with these instructions can result in serious bodily harm and void product warranty.
Manufacturer will assume no liability for loss or damage of any kind, expressed or implied resulting from improper installation or use of this product.

PLEASE READ ENTIRE MANUAL PRIOR TO INSTALLATION !

STEP 1

(Selecting Site)

Before installing your new lift, check the following.

1. **LIFT LOCATION**: Always use architects plans when available. Check layout dimension against floor plan requirements making sure that adequate space if available.

2. **OVERHEAD OBSTRUCTIONS**: The area where the lift will be located should be free of overhead obstructions such as heaters, building supports, electrical lines etc.

3. **DEFECTIVE FLOOR**: Visually inspect the site where the lift is to be installed and check for cracked or defective concrete.

CAUTION

4. **OPERATING TEMPERATURE.** Operate lift only between temperatures of 41° -104° F.

5. Lift is designed for **INDOOR INSTALLATION ONLY.**

STEP 2

(Floor Requirements)

WARNING

This lift must be installed on a solid level concrete floor with no more than 3-degrees of slope. Failure to do so could cause personal injury or death.

A level floor is suggested for proper use and installation and level lifting. If a floor is of questionable slope, consider a survey of the site and/or the possibility of pouring a new level concrete slab.

DANGER

- **DO NOT** install or use this lift on any asphalt surface or any surface other than concrete.
- **DO NOT** install or use this lift on expansion seams or on cracked or defective concrete.
- **DO NOT** install or use this lift on a second / elevated floor without first consulting building architect.
- **DO NOT** install or use this lift outdoors.

MINIMUM CONCRETE SPECIFICATIONS

4” Min. Thickness / 3,000 PSI

DANGER

All models MUST be installed on 3000 PSI concrete only conforming to the minimum requirements shown above. New concrete must be adequately cured by at least 28 days minimum.

DANGER

When removing the lift from shipping angles pay close attention as the posts can slide and can cause injury. Prior to removing the bolts make sure the posts are held securely by a fork lift or some other heavy lifting devise.

PARTS INVENTORY

Be sure to take a complete inventory of parts prior to beginning installation.

Shipment Parts

2	Column Assemblies
4	Lift Arm Assemblies
1	Power Unit - 110-208V, 50/60HZ, 1-Ph.
1	Power Unit Cart

Parts Bag

10	5/8” x 2” Hex Bolt For Anchors
10	5/8” Flat Washers
10	5/8” x 11 Power Drop Recess Anchors
4	Male Quick-Disconnect Fitting
4	Female Quick-Disconnect Fitting
2	Hose Assemblies With 3/8” NPT Male-Thread Fittings
2	Pipe Reducer (3/8” NPT FEMALE - 1/4” NPT MALE)
4	3/8” x 3/8” Pipe Nipple
2	45-Degree Pipe Fitting (3/8” NPT FEMALE - 3/8” NPT MALE)
1	Long 3/8” NPT - 3/8” JIC 90-Degree Fitting
1	Long 90-Degree 3/8” x 3/8” O-Ring Fitting
8	5/16”-18 x 3/4” Hex Bolts (For Power Unit and Flow Divider)
8	5/16”-18 Hex Nuts (For Power Unit and Flow Divider)
8	5/16” Lock Washers (For Power Unit and Flow Divider)
8	5/16” Flat Washers (For Power Unit and Flow Divider)
4	5/16”-18 x 3” Hex Bolts (For Column Wheels)
4	5/16”-18 Nylon Hex Nuts (For Column Wheels)
12	C-Washers / Floor Mounting Shims
4	“C” Retainer Clips for Arms
4	Chrome Pull Rings for Arm Pins
4	3/8”-16 x 1” Hex Bolts (For Column Top Straps)
4	3/8”-16 Hex Nuts (For Column Top Straps)
4	3/8” Flat Washers (For Column Top Straps)
1	Rubber Power Unit Dampner Pad
2	4” Wheels For Power Unit Cart
2	Retainers for Power Unit Cart Wheels
4	3” Wheels For Columns
1	Roll - Teflon Tape

Parts Box

2	Column Top Straps
1	Flow Divider
4	Contact Lift Pads
4	Stackable Pad Adapters
4	Arm Pins
2	Lock Bars

Optional Motorcycle Adapter Kit

1	Adapter Frame Assembly
1	3/8” x 3/8” Pipe Nipple
1	Male Quick-Disconnect Fitting

STEP 3

(Mounting the Hydraulic Power Unit)

1. After installing the Cart Wheels, attach the Power Unit and Rubber Power Unit Dampener Pad to the Power Unit Cart using the four 5/16”-18 x 3/4” Hex Bolts, Nuts and Washers supplied. (See Fig 3.1)

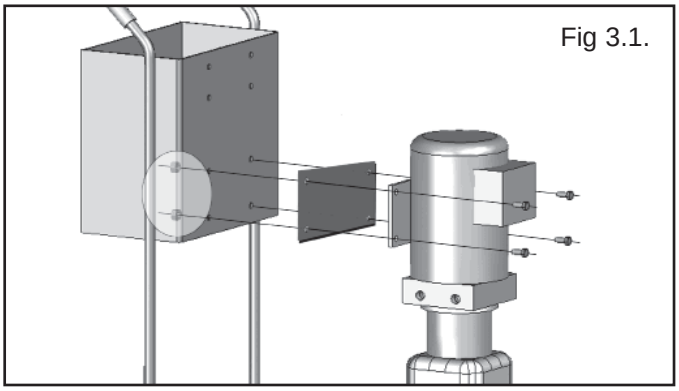

2. Attach the Hydraulic Flow Divider to the Power Unit Cart Using the four 5/16”-18 x 3/4” Hex Bolts, Nuts and Washers supplied. (See Fig. 3.2)

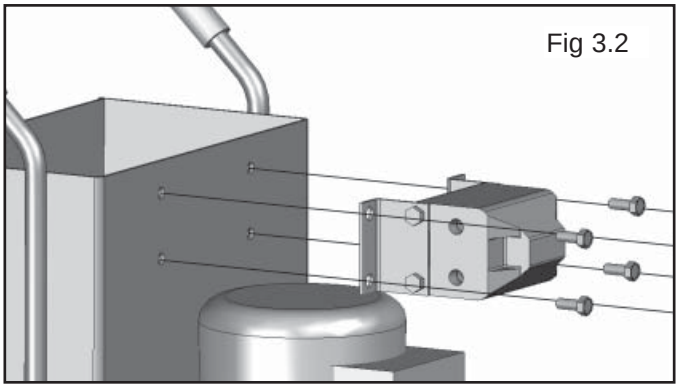

3. Remove the three plastic plugs from the Flow Divider. Install the 90-Degree Long 3/8” NPT Fitting and the 3/8” x 3/8” NPT Fittings to the Flow Divider as shown below. Use Teflon tape on pipe threads only. (See Fig 3.3)

Note: For single column operation Hydraulic Hose connections see Page 21.

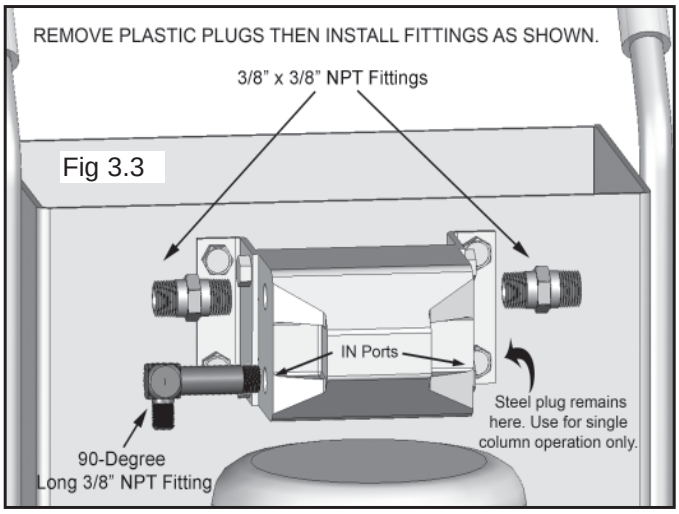

4. Thread the Male Quick Disconnect Fittings onto the Fittings using Teflon tap on the pipe threads. (See Fig. 3.4)

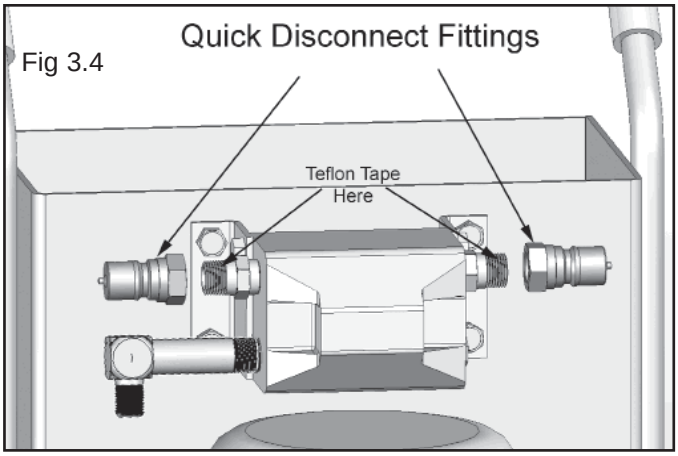

5. Remove the plastic plug from the Power Unit. Install the Long 90-Degree 3/8” x 3/8” O-Ring Fitting as shown below. (See Fig 3.5)

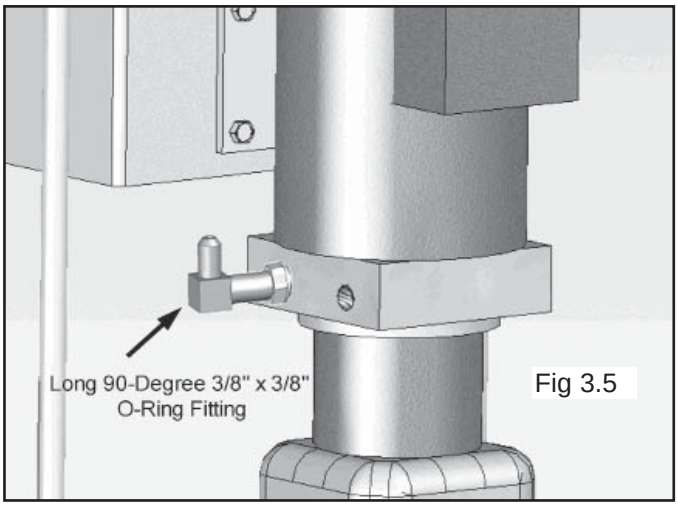

6. Attach the Short Power Unit Hydraulic Hose as shown. Do not use Teflon tape on the JIC Fittings. (See Fig. 3.6)

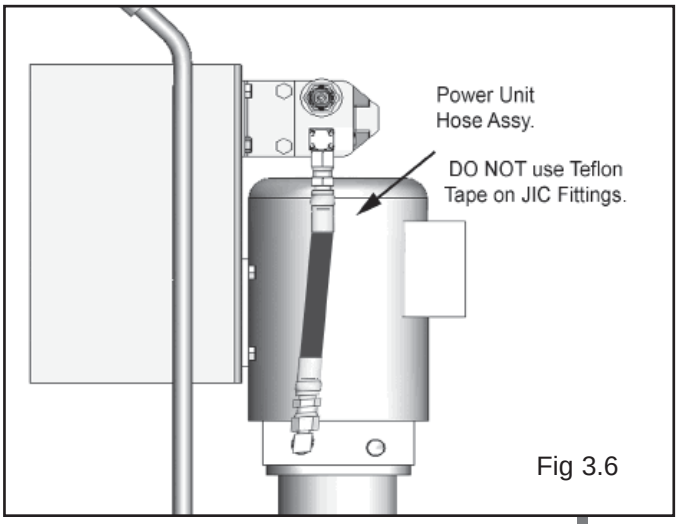

STEP 4

(Installing the Hydraulic Cylinders)

1. Install the Cylinder Fittings as shown using Teflon tap on the pipe threads. (See Fig. 4.1)

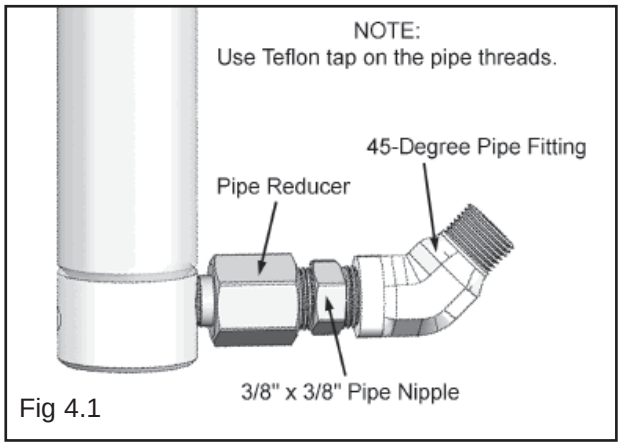

Fig 4.1

2. After installing the Column Wheels, turn the columns over and lay down open side up. Slide the Carriages upwards until centered midway in the columns. (See Fig 4.2)

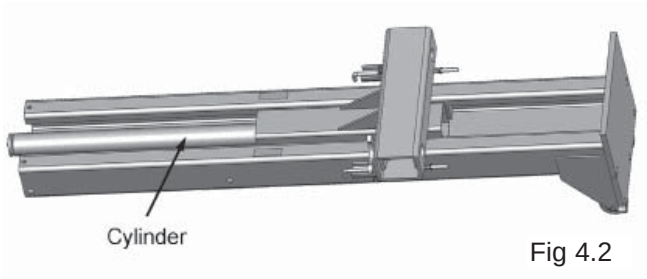

Fig 4.2

3. Install the cylinders through the Carriage Bottom Plate then through the Carriage Top Plate until the Cylinder Rings come in contact with the Carriage Bottom Plate. (See Fig 4.3)

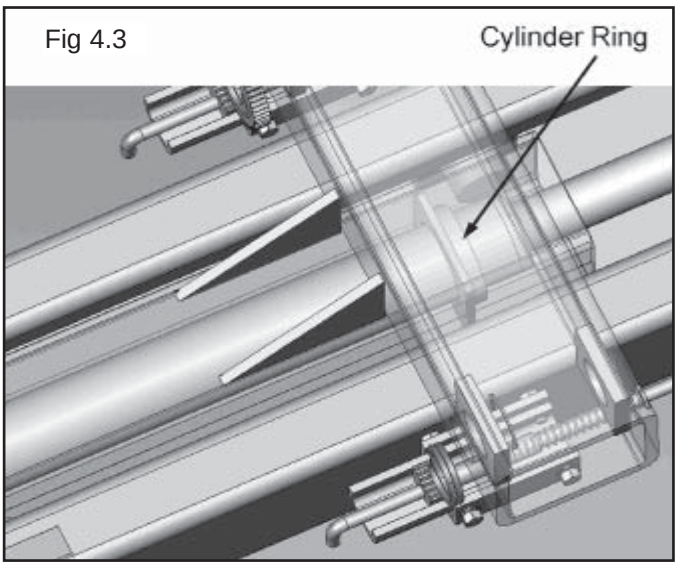

Fig 4.3

4. Position the Cylinder Fittings through the access hole located on the backside of the column. (See Fig 4.4)

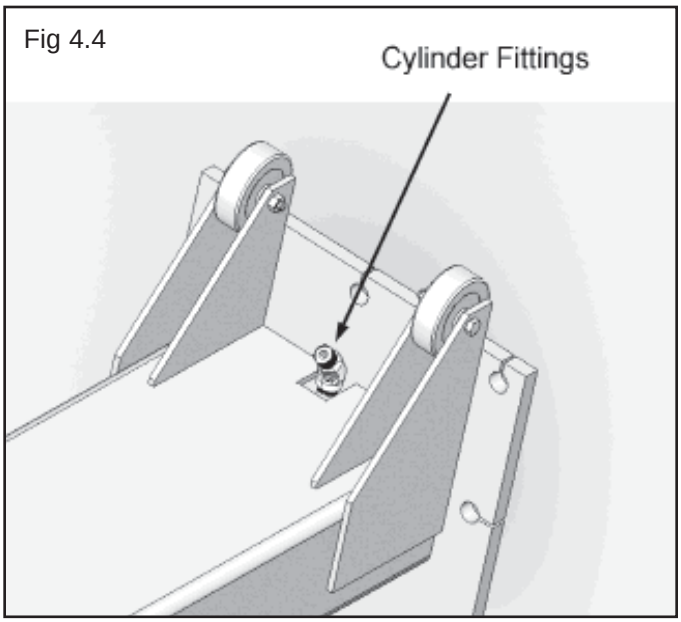

Fig 4.4

5. Install the Column Tie Bars using the 3/8”-16 x 1” Hex Bolts, Nuts and Washers. (See Fig 4.5)

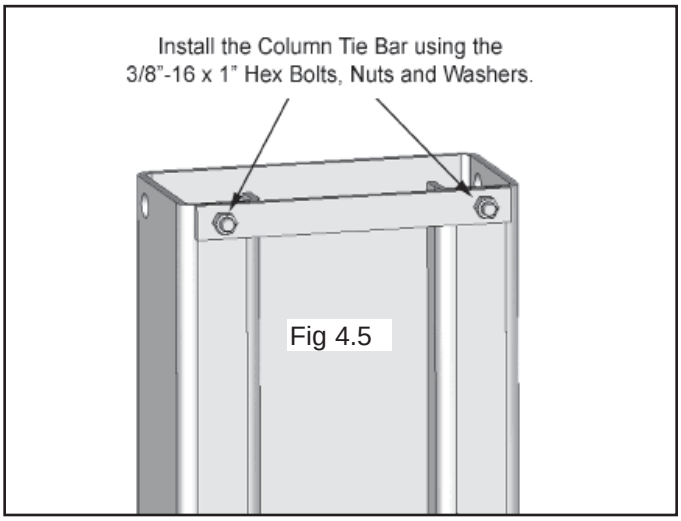

Fig 4.5

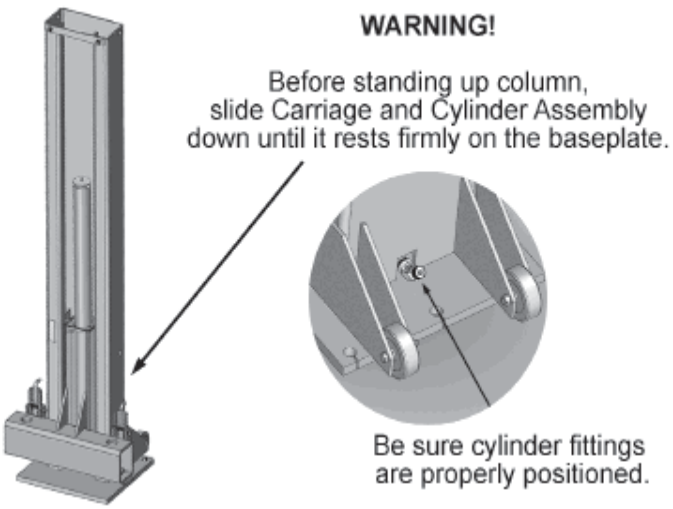

STEP 5

(Site Layout)

1. Based on the vehicles you will be servicing and the size of the shop space determine the desired width and location of the lift.

2. Once a location is determined, use a carpenters chalk line to layout a grid for the Post locations. Keep all dimensions and squareness within 1/8" or malfunctioning of the lift can occur.

3. **After the Post locations are properly marked, use a chalk or crayon to make an outline of the Columns on the floor** at each location using the Post Base Plates as a template.

4. **Double check** all dimensions and make sure that the layout is perfectly square. layout is perfectly square.

FLOORPLAN

Wide or narrow installation is possible – the lift can be installed at a width that suits the vehicles you will be raising. You may even choose to install additional anchors at varied column positions for adaptability to multiple vehicle configurations.

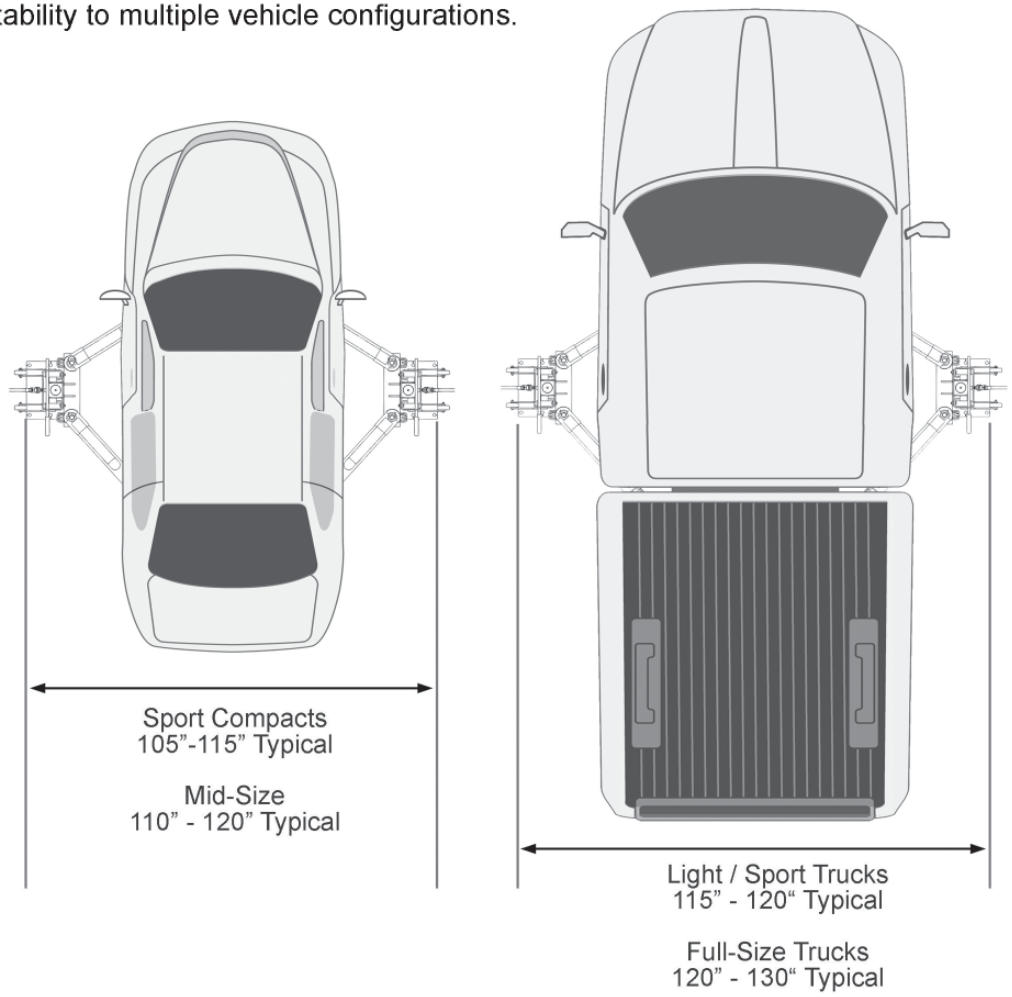

Use the Edge of the Base Plate to
Line up Posts along the Chalk Line

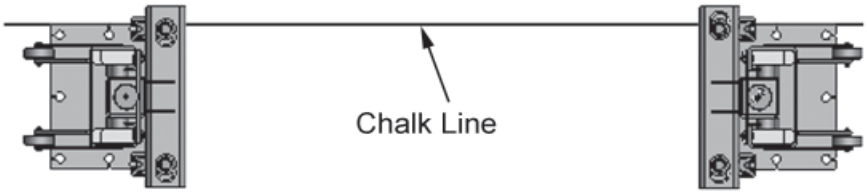

STEP 6

(Installation of Power Drop Anchors)

1. Before proceeding, double check location and measurements, Make certain that the Base Plates of each Column are aligned with the chalk / crayon lines.

FOLLOW PROCEDURE EXACTLY FOR PROPER FITMENT AND ALIGNMENT OF ANCHORS. THE HOLES MUST BE DRILLED ACCORDING TO THE HOLE LOCATION DIAGRAM SHOWN BELOW.

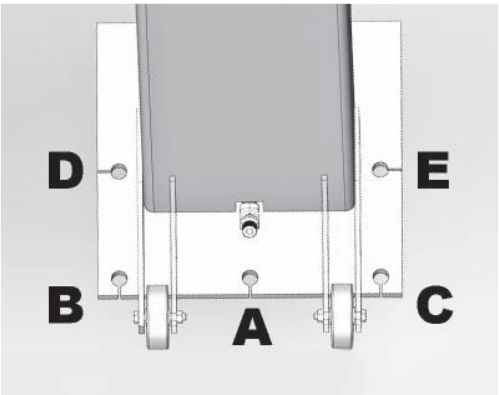

2. Using the base plate on the Column as a guide, hold the drill perpendicular to the concrete surface and drill **one pilot anchor hole at location "A"** in the concrete approximately 2" deep using a rotary hammer drill and **5/8" concrete drill-bit.**

3. Move the column out of the way.

4. Hold the drill perpendicular to the concrete surface then drill out the "**A" pilot hole** to a minimum depth of 5-1/2" deep using a rotary hammer drill and **7/8" concrete drill-bit.** (See Fig. 6.2)

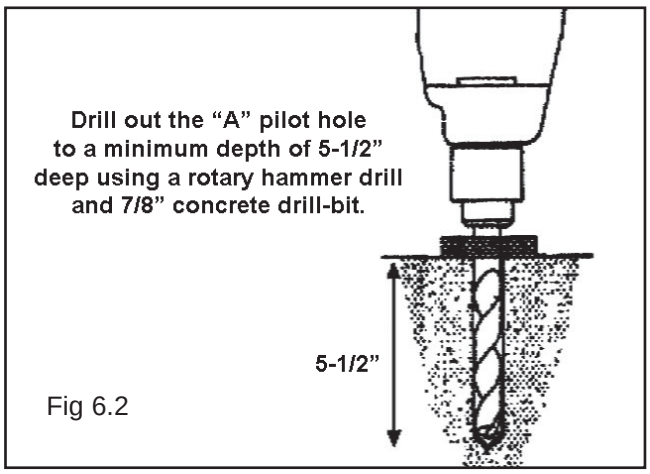

Fig 6.2

5. After drilling, thoroughly clean hole using dust broom or vacuum cleaner.

6. Thread the 5/8" x 2" Hex Bolt into the Power Drop Anchor body until 5/8" of threads shows between the bottom of Bolt Head and the top off the Power Drop Anchor. (See Fig. 6.3)

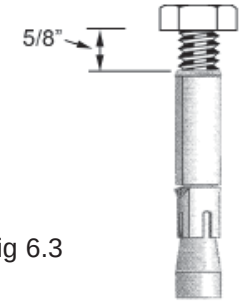

Fig 6.3

7. Tap Anchor Bolt assembly into the "A" hole until the Bolt Head rests against the Concrete Surface and the Power Drop Anchor rests approximately 5/8" below the surface of the concrete. (See Fig. 6.4)

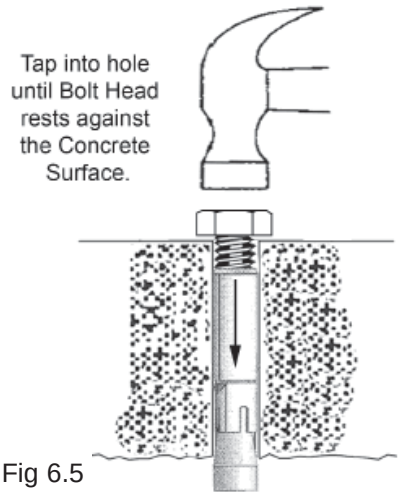

Fig 6.5

8. After the "A" Power Drop Anchor is installed, move the column back into position, lining up the Column with the floor markings and the "A" Base Plate hole positioned over the Power Drop Anchor.

9. Install a 5/8" x 2" Hex Bolt and Flat Washer then tighten the Column firmly to the floor until the Power Drop Anchor sets flush with the concrete surface. **DO NOT use an impact wrench for this procedure.** (See Fig. 6.6)

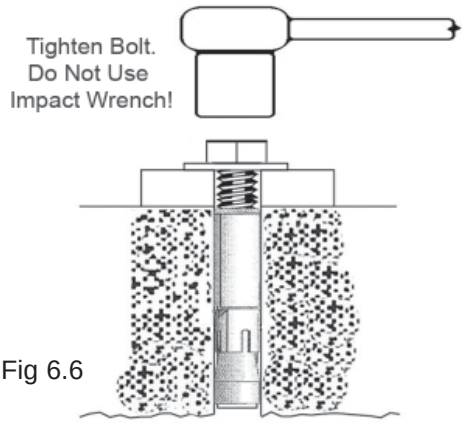

Fig 6.6

10. With the column firmly anchored, use the Base Plate as a guide, then drill pilot holes B, C, D & E approximately 2” deep using a rotary hammer drill and 5/8” concrete drill-bit.

11. Move the column out of the way.

12. Repeat previous steps 5 - 9 making sure the column Base Plate remains perfectly positioned over each individual pilot hole.

13. If shimming is required, insert the Shims as necessary under the Base Plate so that when the Anchor Bolts are tightened, the Columns will be plumb both side to side and front to rear. (See Fig. 6.7)

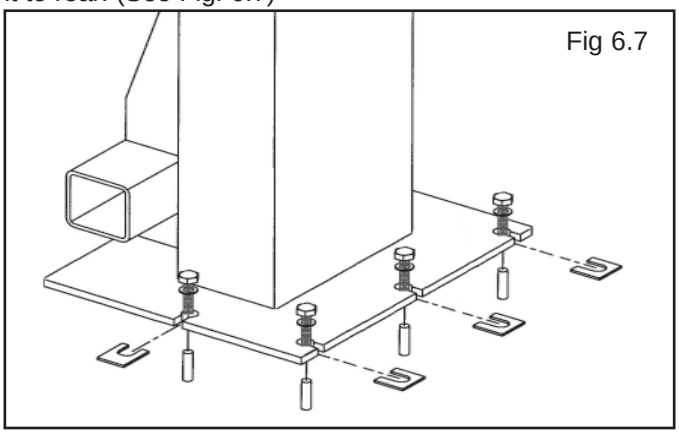

14. With the Shims and Anchor Bolts in place, tighten all Anchor Bolts tight to the base plate . Turn 3 to 3-3/4 Turns. **DO NOT** use an impact wrench for this procedure.
(See Fig. 6.8)

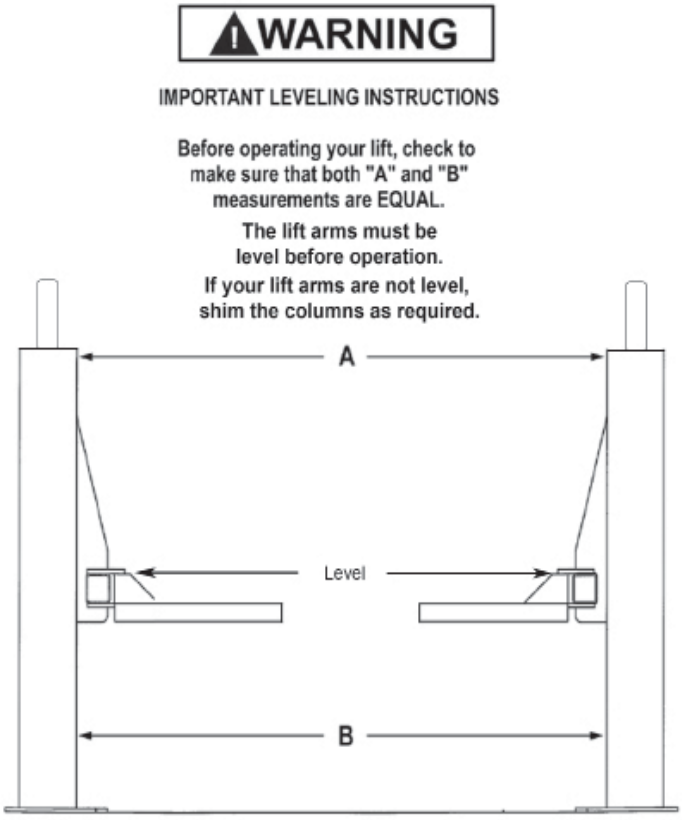

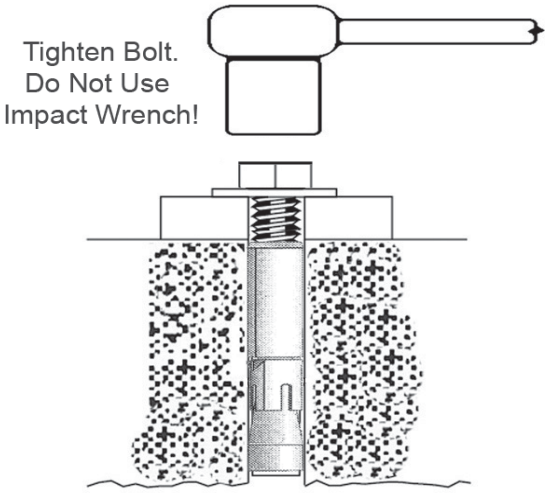

WARNING

Inspect all drop in anchors for proper setting and or damage each time the lift is re-installed. inspect the concrete for cracks defects and/or damage. do not reinstall the lift if any of the drop in anchors are defective or the concrete is cracked or defective.

WARNING

It may be necessary to shim the columns to ensure that the columns are plumb. The columns must be plumb and square or damage or injury may occur when using the lift. Do not exceed 1/8’ total shim thickness when using the supplied Drop in anchors.

NOTE:
IT WILL BE HELPFUL TO MARK ON THE BASE PLATE OR OTHERWISE NOTE THE LOCATION AND NUMBER OF SHIMS USED AT EACH DROP ANCHOR LOCATION TO ASSIST AT TIME OF REINSTALLATION.

STEP 7

(Connecting Hydraulic Lines)

1. Thread the Male Quick Disconnect Fittings onto the rear cylinder fittings using Teflon tap on the pipe threads. (See Fig. 7.1)

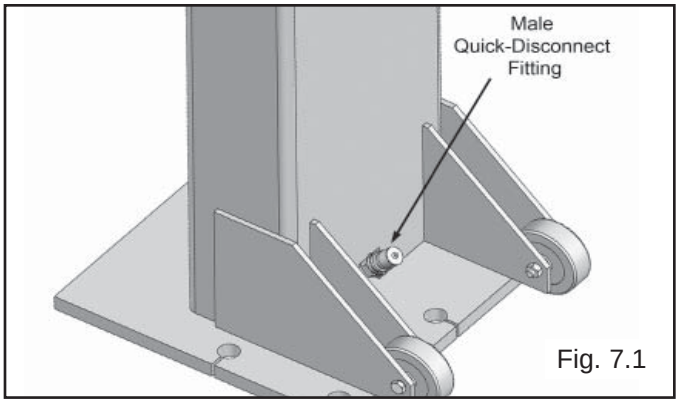

Fig. 7.1

2. Install the Female Quick-Disconnect Fittings at each hose end. (See Fig. 7.2)

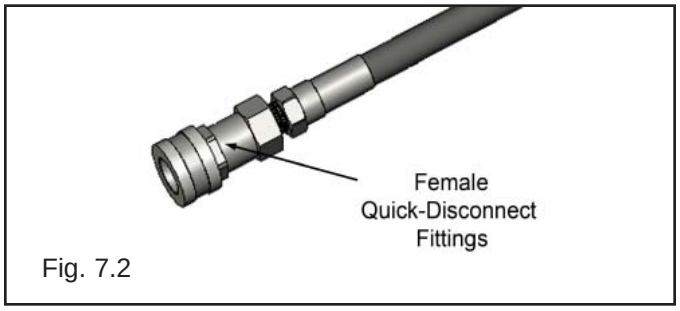

Fig. 7.2

3. Recheck all fitting connections to make sure they are properly tightened before proceeding.

4. Position the Power Unit Stand at the front or rear of the vehicle.

5. Connect one end of each Cylinder Hose Assembly to the Quick Disconnect fitting at the base of each Cylinder. (See Fig. 7.3)

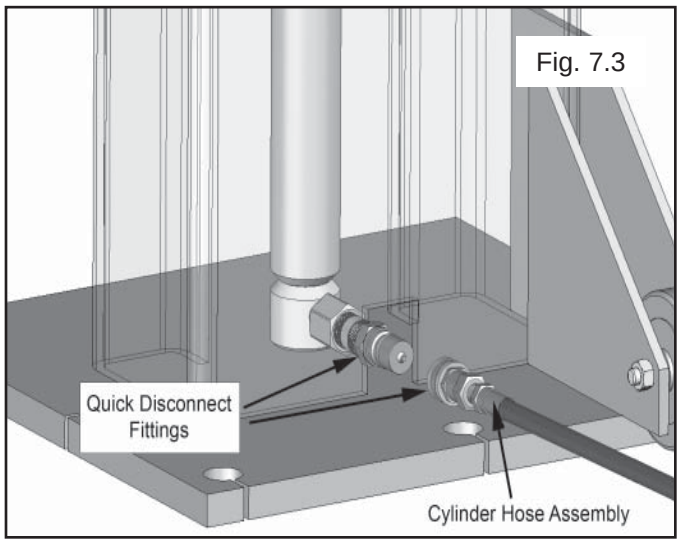

Fig. 7.3

4.Connect the other end of the Hoses to the Upper Quick Disconnect fittings on the Flow Divider. (See Fig. 7.4)

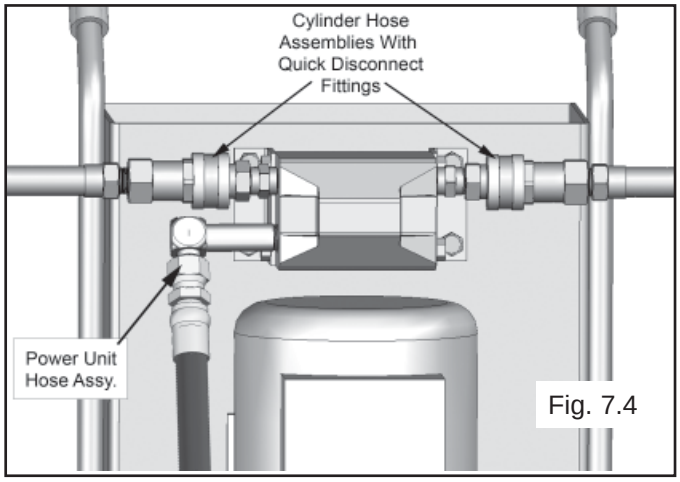

Fig. 7.4

STEP 8

(Installing the Lift Arms)

1. Place the Lift Arm Assembly on the Lift Heads. Install the Lift Head Pins into the Lift Head and through the holes in the Arm Assembly. (See Fig. 8.1 / 8.2)

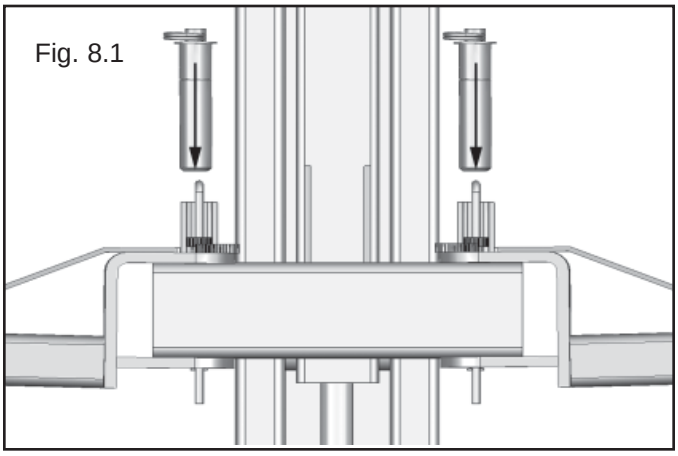
Fig. 8.1

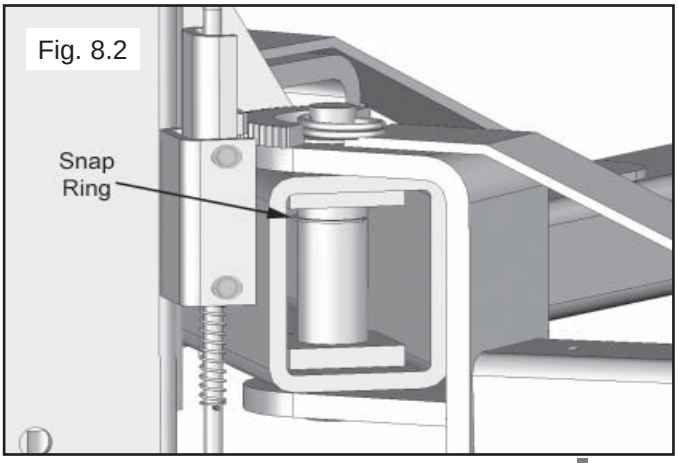

Fig. 8.2

STEP 9

(Hydraulic Power Unit Set Up)

1. Fill the Power Unit Reservoir with 7 quarts of DEXRON TYPE III ATF. Make sure the funnel used to fill the Power Unit is clean.

2. The standard Power Unit for your lift is 110 volt, 60HZ, single phase. The lift should be plugged into a dedicated circuit with a 30 Amp Circuit breaker.

⚠ WARNING

All wiring must be performed by a certified electrician only. SEE WIRING INSTRUCTIONS AFFIXED TO MOTOR FOR PROPER WIRING INSTRUCTIONS.

⚠ DANGER

RISK OF EXPLOSION!

This equipment has internal arcing or parts that may spark and should not be exposed to flammable vapors. Motor should not be located in a recessed area or below floor level.

IMPORTANT

♦ **NEVER** expose motor to rain or other damp environments. **DAMAGE TO MOTOR CAUSED BY WATER IS NOT COVERED UNDER WARRANTY**

♦ DO NOT run Power Unit with no oil. Damage to pump can occur.

♦ Operate lift only between temperatures 41°- 104° F.

♦ Improper electrical hook-up can damage motor and will not be covered under warranty.

♦ Use a separate breaker for each Power Unit.

⚠ DANGER

Protect each circuit with time delay fuse or circuit breaker.

♦ For 110-120 volt, 1-phase, use 30 amp breaker.
♦ For 208-230 volt, 1-phase, use 25 amp breaker.
♦ For 208-230 volt, 3-phase, use 20 amp breaker.
♦ For 380-440 volt, 3-phase, use 15 amp breaker.

STEP 10

(Lift Start Up / Final Adjustments)

CAUTION!

During the START-UP procedure, observe all operating components and check for proper installation and adjustment. DO NOT attempt to raise vehicle until a thorough operational check has been completed.

1. Spray the inside of the Columns where the Slide Blocks glide with a light lubricant or WD-40. (See Fig. 10.1)

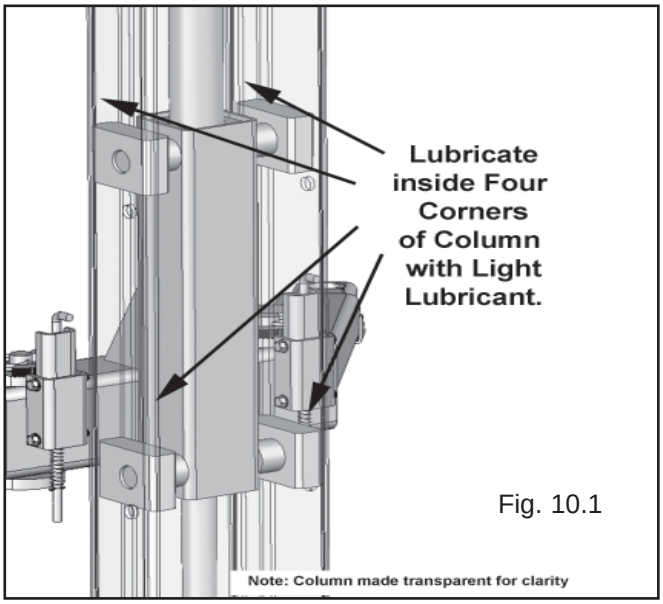

Fig. 10.1

2. Remove both Safety Lock Bars from the Columns.

3. Test the Power Unit by pressing the push-button switch. If the motor sounds like it is operating properly, raise the lift a few inches and check all hose connections for leaks. If the motor gets hot or sounds peculiar, stop and check all electrical connections.

4. Continue pressing the raise button until the lift starts to move.

⚠ WARNING

♦ **KEEP HANDS AND FEET CLEAR**.
♦ Remove hands and feet from any moving parts.
♦ Keep feet clear of lift when lowering.
♦ Avoid pinch points.

5. Raise the lift half way until the lift arms are approximately 24” off the floor.

6. Loosen the bolts on the Arm Restraints. Adjust the Arm Restraints so the gears mesh firmly and smoothly. Tighten the Arm Restraint Bolts. Apply a small amount of grease to the gears. (See Fig. 10.2)

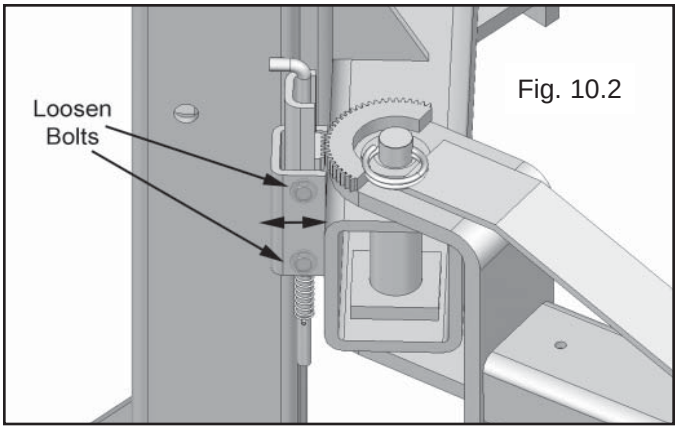

Fig. 10.2

STEP 11
(Bleeding)

1.With the lift in an elevated position, the hoses connected and the oil reservoir full, LOOSEN the Bleeder Screws located at the top of each Hydraulic Cylinder using a 3/16" Allen wrench. DO NOT completely remove the Bleeder Screws. Watch and listen as trapped air escapes the Cylinders and fluid beings to weep from the screw area. Once steady fluid appears, re-tighten the Bleeder Screw. (See Fig. 11.1)

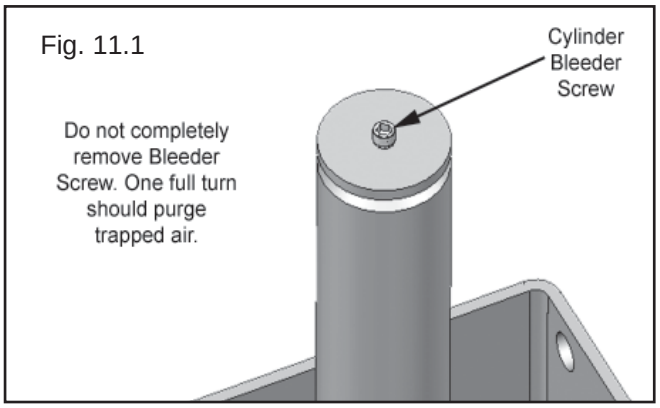

Fig. 11.1

WARNING

The lift will move down when bleeding
make sure all equipment, personnel , hands and feet
are clear before bleeding

2. Press the power unit RAISE button until both cylinders reach their full stroke. **DO NOT** continue pressing the RAISE button after lift reaches full height - damage to motor and/or flow divider can occur if continued.

3. Repeat the Bleeding Procedure.

4. Press the LOWERING HANDLE inwards until the lift lowers completely to the floor. REPEAT the above procedure until the lift maintains level lifting and lowering.

POST-INSTALLATION CHECK-OFF

- Columns Properly Shimmed And Stable
- Anchor Bolts Tightened
- Pivot / Sheave Pins Properly Attached
- Tie Bar Straps Installed and Bolts Tight
- Electric Power Supply Confirmed
- Safety Lock Bars Removed
- Check For Hydraulic Leaks
- Oil Level Full
- Lubrication of Critical Components
- Check For Overhead Obstructions
- Lift Arms Level
- Arm Restraints Properly Adjusted
- All Screws, Bolts, and Pins Secured
- Surrounding Area Clean
- Operation and Safety Manuals on Site.

WARNING

DO NOT use lift if an unlevel lifting condition occurs at the arm pad locations that is greater than 3-degrees or 1.5". If an unbalanced condition occurs, Follow the bleeding instructions shown on this page or consult factory. The lift must be re-leveled, shimmed and bled each time the lift is reinstalled.
Failure to follow these instructions can result in serious injury or death.

OPTIONAL FOOT GUARD INSTALLATION

1. Install the Foot Guards to the outside of the 4 Lift Arm Assemblies. Tighten the Hex Head Bolts.

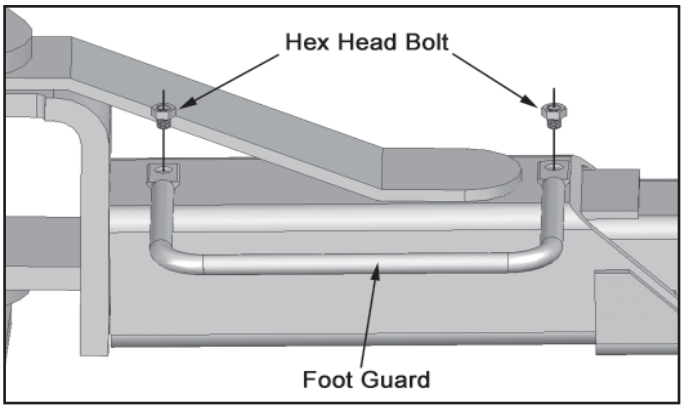

STEP 12

(Operation)

To Raise Lift;

1. Load vehicle onto the lift using Vehicle Lifting Guide to determine proper lifting points. (See Fig. 12.1)

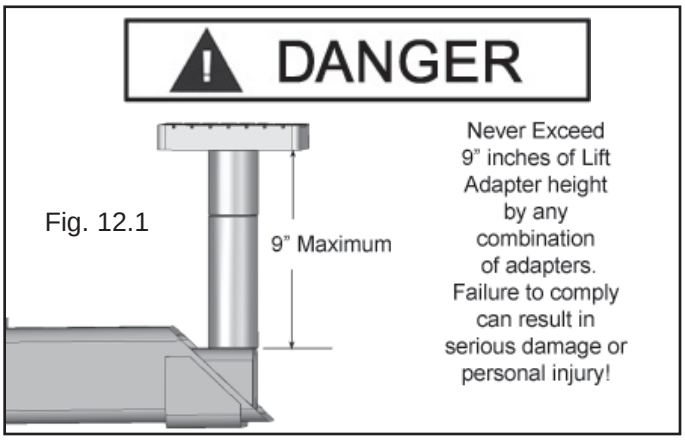

Fig. 12.1

2. **NEVER** use lift pad assemblies without rubber slip over pads in place.

3. Set parking brake or use wheel chock to hold vehicle in position.

4. Before raising vehicle, be sure all personnel are clear of the lift and surrounding area. Pay careful attention to overhead clearances.

5. Raise the lift to the desired height by pressing the Push Button on the power unit.

6. After vehicle is raised to the desired height, pass the Safety Lock Bars through each column then **lower lift onto the Lock Bars.** **ALWAYS INSURE SAFETY LOCK BARS ARE INSTALLED** before entering work area. (See Fig. 12.2)

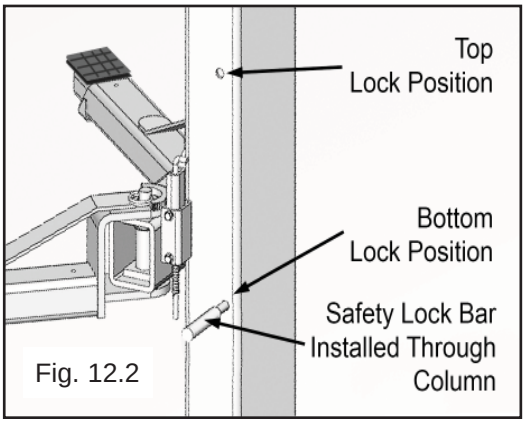

Fig. 12.2

DANGER

Visually confirm that safety lock bars are installed before entering work area.

To Lower Lift;

1. Before lowering vehicle, be sure all personnel are clear of the lift and surrounding area. Pay careful attention to overhead clearances. Insure all tools and equipment have been cleared from under the lift.

2. Raise the lift off of the Safety Lock Bars by pressing the push button on the power unit. Make sure you raise the lift by at least one inch to allow adequate clearance for the Safety Bars to be removed. Remove Lock Bars.

3. Push the LOWERING HANDLE on the power unit until the lift has descended completely.

WARNING

When lowering the lift PAY CAREFUL ATTENTION that all personnel and objects are kept clear. ALWAYS keep a visual line of site on the lift AT ALL TIMES. ALWAYS make sure that BOTH LOCK BARS are removed.

WEEKLY MAINTENANCE

1. Lubricate all moving parts with general purpose oil or WD-40.
2. Check all connections, bolts and pins to insure proper mounting.

MONTHLY MAINTENANCE

1. Make a visual inspection of ALL MOVING PARTS and check for excessive signs of wear.
2. Check condition of lift pads and adapters.
3. Check condition of arm restraints. Adjust as necessary.
4. Replace ALL FAULTY PARTS before lift is put back into operation.

WARNING

- **NEVER EXCEED THE RATED CAPACITY** of lift.
- **DO NOT USE LIFT** if any component is found to be defective or worn.
- **NEVER OPERATE LIFT** with any person or equipment below.
- **ALWAYS STAND CLEAR** of lift when lowering or raising.
- **ALWAYS INSURE SAFETY LOCKS ARE ENGAGED** before entering work area.
- **NEVER LEAVE LIFT IN ELEVATED CONDITION** unless all Safety Locks are engaged.

TO RAISE LIFT

- ALWAYS follow the bleeding instructions outlined in the manual PRIOR to using your lift.
- Read Operating and Safety manuals before using lift.
- Always lift vehicle according to manufacturer's recommended lifting points.
- Position vehicle between columns. Adjust swing arms so that vehicle is positioned with the center of gravity midway between pads.
- Position lift contact pads at manufacturers recommended lifting points.
- Use truck adapters as needed. Never exceed 6" of pad/adapter height.
- Raise lift by pressing RAISE BUTTON on power unit until contact pads make contact with the underside of vehicle.
- Recheck to make sure vehicle is secure.
- Raise vehicle to desired working height then press power unit
- LOWERING HANDLE until lift carriages rest onto nearest safety lock position.
- Maintain visual contact with vehicle and surrounding area at all times while raising lift.
- STOP IMMEDIATELY if load shifts or becomes unlevel.
- Always ensure safety lock bar(s) are installed before any attempt is made to work on or near vehicle.
- Always ensure contact pads are making full contact with vehicle before attempting to work on or near vehicle.

TO LOWER LIFT

- Raise lift by pressing RAISE BUTTON on power unit. Elevate lift at least one inch to allow adequate clearance to remove lock bar(s).
- Remove both safety lock bar(s).
- Be sure tool trays, stands or personnel are removed from under vehicle.
- Lower vehicle by pressing power unit lowering handle until lift has descended completely.
- Maintain visual contact with vehicle and surrounding area at all times while lowering lift.
- STOP IMMEDIATELY if load shifts or becomes unlevel.
- Before removing vehicle from lift area, position lift arms to provide unobstructed exit.
- NEVER, drive over lift arms.

REQUIRED MONTHLY MAINTENANCE

- ALWAYS consult operation manual for factory recommended maintenance.
- Check arm restraints for proper operation.
- Check all bolts and pins to ensure proper mounting.
- Visually inspect safety lock bar(s).
- Visually inspect concrete floor. DO NOT USE LIFT if concrete foundation shows signs of deterioration.
- Inspect all anchor bolts.
- Inspect all lift pads, replace if necessary.

WARNING

- DO NOT USE LIFT if an unlevel lifting condition occurs at the arm pad locations that is greater than 3-degrees or 1.5".
- WARNING: If anchor bolts are loose, or any component of the lift is found to be defective, DO NOT USE LIFT!
- Install and inspect all quick connect/disconnect hose ends before any attempt is made to raise vehicle.
- Securely tighten all anchor bolts prior to operation.
- Never operate the lift with any person or equipment below.
- Never exceed rated capacity.
- Always ensure safety lock bar(s) are engaged before any attempt is made to work on or near vehicle.
- Never leave lift in an elevated position unless the safety lock bar(s) are engaged.
- Do not permit electric motor to get wet! Motor damage caused by dampness is not covered under warranty.

NEVER LIFT ANY VEHICLE IN ANY MANNER WITH LESS THE ALL FOUR (4) ARMS. RATED CAPACITY OF EACH LIFT ARM IS NO GREATER THAT ONE FOURTH (1/4) OF THE OVERALL LIFT CAPACITY.

SAFE LIFT OPERATION

Automotive and truck lifts are critical to the operation and profitability of your business. The safe use of this and other lifts in your shop is critical in preventing employee injuries and damage to customer's vehicles. By operating lifts safely you can insure that your shop is profitable, productive and safe. Safe operation of automotive lifts requires that only trained employees should be allowed to use the lift.

TRAINING SHOULD INCLUDE, BUT NOT LIMITED TO:

- Proper positioning of the vehicle on the lift. (See manufacturers loading requirements.)
- Use of the operating controls.
- Understanding the lift capacity.
- Proper use of jack stands or other load supporting devices.
- Proper use, understanding and visual identification of safety lock devices and their operation.
- Reviewing the safety rules.
- Proper housekeeping procedures (lift area should be free of grease, oil, tools, equipment, trash, and other debris).
- A daily inspection of the lift should be completed prior to its use. Safety devices, operating controls, lift arms and other critical parts should be inspected prior to using the lift.
- All maintenance and repairs of the lift should be completed by following the manufacturer's requirements. Lift repair parts should meet or exceed OEM specifications. Repairs should only be completed by a qualified lift technician.
- The vehicle manufacturer's recommendations should be used for spotting and lifting the vehicle.

LIFT OPERATION / SAFETY

- It is important that you know the load limit. Be careful that you do not overload the lift . If you are unsure what the load limit is, check the data plate found on one of the lift columns or contact the manufacturer.
- The center of gravity should be followed closely to what the manufacturer recommends.
- Always make sure you have proper overhead clearance. Additionally, check that attachments, (vehicle signs, campers, antennas, etc. are not in the way.
- Be sure that prior to the vehicle being raised, the doors, trunk, and hood are closed securely.
- Prior to being raised, make sure there is no one standing closer than six feet from the lift.
- After positioning the vehicle on the lift runways, set the emergency brake, make sure the ignition is off, the doors are closed, overhead obstructions are cleared, and the transmission is in neutral.
- Double check that the automatic chock devices are in position and then when the lift is raised, observe the chocks.
- Put pads or adapters in the right position under the contact points that have been recommended.
- The lift should be raised just until the vehicle's wheels are about one foot off the ground. If contact with the vehicle is uneven or it appears that the vehicle is not sitting secure, carefully lower the lift and readjust.
- Always consider potential problems that might cause a vehicle to slip, i.e., heavy cargo, undercoating, etc.
- Pay attention when walking under a vehicle that is up on the hydraulic lift.

SAFE LIFT OPERATION

- **DO NOT** leave the controls while the lift is still in motion.
- **DO NOT** stand directly in front of the vehicle or in the bay when vehicle is being loaded or driven into position.
- **DO NOT** go near vehicle or attempt to work on the vehicle when being raised or lowered.
- **REMAIN CLEAR** of lift when raising or lowering vehicle.
- **DO NOT** rock the vehicle while on the lift or remove any heavy component from vehicle that may cause excessive weight shift.
- **DO NOT** lower the vehicle until people, materials, and tools are clear
- **ALWAYS INSURE** that the safety lock bars are installed before any attempt is made to work on or near vehicle.
- Some vehicle maintenance and repair activities may cause the vehicle to shift. Follow the manufacturer's guidelines when performing these operations. The use of jack stands or alternate lift points may be required when completing some repairs.
- **READ AND UNDERSTAND** all safety warning procedures before operating lift.
- **KEEP HANDS AND FEET CLEAR**. Remove hands and feet from any moving parts. Keep feet clear of lift when lowering. Avoid pinch points.
- **ONLY TRAINED OPERATORS** should operate this lift. All non-trained personnel should be kept away from work area. Never let non-trained personnel come in contact with, or operate lift.
- **USE LIFT CORRECTLY**. Use lift in the proper manner. Never use lifting adapters other than what is approved by the manufacturer.
- **DO NOT** override self-closing lift controls.
- **CLEAR AREA** if vehicle is on danger of falling.
- **STAY ALERT**. Watch what you are doing. Use common sense. Be aware.
- **CHECK FOR DAMAGED PARTS**. Check for alignment of moving parts, breakage of parts or any condition that may affect its operation. Do not use lift if any component is broken or damaged.
- **NEVER** remove safety related components from the lift. Do not use lift if safety related components are damaged or missing.
- When the lift is being lowered, make sure everyone is standing at least six feet away.
- Be sure there are no jacks, tools, equipment, left under the lift before lowering.
- Always lower the vehicle down slowly and smoothly.

STEP 13

(Lift Removal)

1. Depress the lowering valve on the Power Unit.

2. Ensure that the lift is lowered all the way to the ground.

3. Disconnect the Power Unit from the power source. and/or ensure that the power to the Circuit is shut off to prevent accidental powering on of the lift while disassembling.

4. Disconnect the Cylinder Hoses from the Cylinder. Hoses can be coiled and stored in the Power Unit cart.

WARNING

Before removing cylinder hoses, always ensure that hydraulic pressure has been relieved from the system by depressing the lowering valve until the lift is fully lowered or the raised load is fully settled onto the safety lock bars.

Never connect or disconnect hoses with the lift in an elevated non-locked position.

DANGER

Do not perform any maintenance or installation of any components with out first ensuring that electrical power has been disconnected at the source or panel and cannot be re-energized until all maintenance and/or installation procedures are completed.

5. Be careful to clean up any spilled hydraulic fluid that may drip from the hose assemblies.

6. Place the Safety Lock Bars in the top column holes.

7. Remove the Lift Arm Assemblies.

8. Loosen the Anchor Bolts . Be careful not to disturbed the lift Column until ready to move the Column.

9. Move the Column to your storage area. Secure with straps or other device to prevent any accidental tipping or movement of the columns during storage.

STEP 14

(Re-Installation)

1. Clear installation area of debris, tools and equipment.

2. Blow out the mounting holes with compressed air.

3. Inspect the drop in anchors for proper setting and the concrete for defects and /or damage.

4. Line up the holes of the Base Plates with the holes. Re-shim the lift as required to ensure the lift is installed level.

5. With the Shims and Anchor Bolts in place, tighten all Anchor Bolts tight to the base plate . Turn 3 to 3-3/4 Turns. **DO NOT** use an impact wrench for this procedure.

6. Follow all procedures as outlined in Steps 8 - 12.

POST-INSTALLATION CHECK-OFF

- Columns Properly Shimmed And Stable
- Anchor Bolts Tightened
- Pivot / Sheave Pins Properly Attached
- Tie Bar Straps Installed and Bolts Tight
- Electric Power Supply Confirmed
- Safety Lock Bars Removed
- Check For Hydraulic Leaks
- Oil Level Full
- Lubrication of Critical Components
- Check For Overhead Obstructions
- Lift Arms Level
- Arm Restraints Properly Adjusted
- All Screws, Bolts, and Pins Secured
- Surrounding Area Clean

WARNING

Inspect all drop in anchors for proper setting and or damage each time the lift is re-installed. Inspect the concrete for cracks defects and/or damage. Do not reinstall the lift if any of the drop in anchors are defective or the concrete is cracked or defective.

DANGER

The lift must be re-leveled, shimmed and blead each time the lift is reinstalled. Failure to do so may result in Injury or death.

STEP 15

(Installation of Motorcycle Adapters)

1. Lower the lift all the way to the ground.

2. Swivel both arms towards the center line of the lift until they are parallel.

3. Fully extend both arms. (See Fig. 15.1)

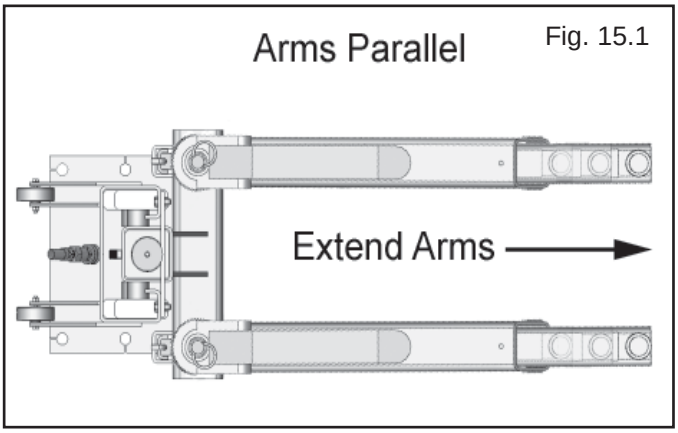

Fig. 15.1

4. Align the Motorcycle Adapters and lower onto the lift arms. Ensure it rests firmly on top of the lift arms. (See Fig. 15.2)

Fig. 15.2

5. Disconnect both cylinder hoses from the Flow Control Valve. (See Fig. 15.3)

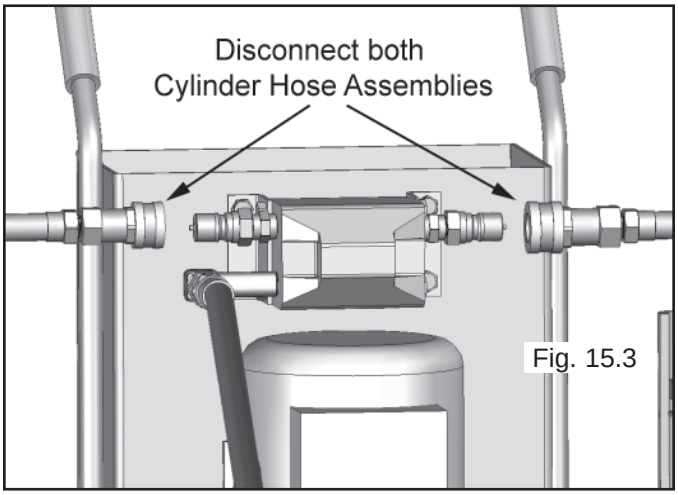

Fig. 15.3

6. Remove steel plug from the lower Flow Control Valve port. Install the 3/8" x 3/8" Pipe Nipple and Quick Disconnect fitting into the lower port using Teflon Tape and tighten. (See Fig. 15.4 / 15.5)

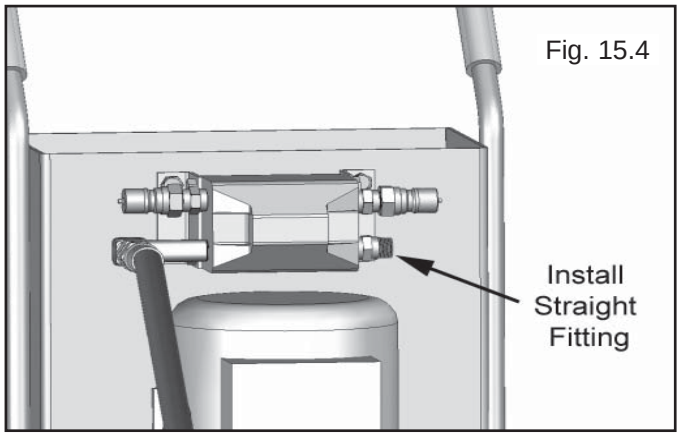

Fig. 15.4

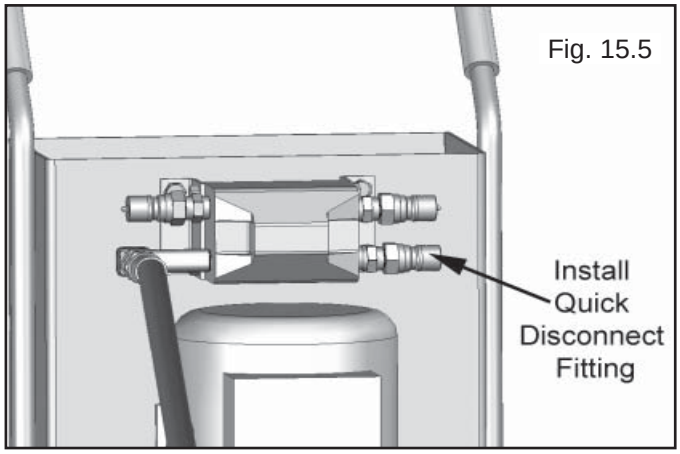

Fig. 15.5

7. Reconnect a single lift hose to the lower quick disconnect fitting for single column operation. (See Fig. 15.6)

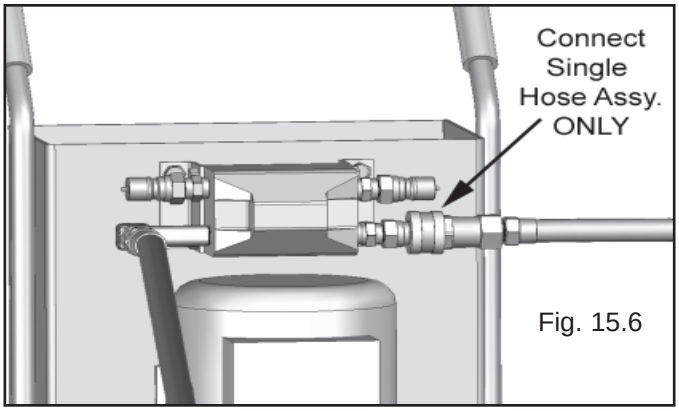

Fig. 15.6

WARNING

NOTE: During Single Column Operation be sure to disconnect both Hoses and reconnect only one Hose assembly to the Lower Port on the Flow Control Valve or damage to the lift or personnel injury may result.

LIFT WILL NOT RAISE

POSSIBLE CAUSE

1. Air in oil, (1,2,8,13)
2. Cylinder binding, (9)
3. Cylinder leaks internally, (9)
4. Motor run backward under pressure, (11)
5. Lowering valve leaks, (3,4,6,10,11)
6. Motor runs backwards, (7,14,11)
7. Pump damaged, (10,11)
8. Pump won't prime, (1,8,13,14,3,12,10,11)
9. Relief valve leaks, (10,11)
10. Voltage to motor incorrect, (7,14,11)

REMEDY	***INSTRUCTION***
1. Check for proper oil level.	The oil level should be up to the bleed screw in the reservoir with the lift all the way down.
2. Bleed cylinders.	See Installation Manual
3. Flush- Release valve to get rid of. . . . . possible contamination	Hold release handle down and start unit allowing it to run for 15 seconds.
4. Dirty oil.	Replace oil with clean Dexron ATF.
5. Tighten all fasteners.	Tighten fasteners to recommended torques.
6. Check for free movement of release.	If handle does not move freely, replace bracket or handle assembly.
7. Check motor is wired correctly.	Compare wiring of motor to electrical diagram on drawing.
8. Oil seal damaged or cocked	Replace oil seal around pump shaft.
9. See Installation Manual	Consult Lift Manufacturer.
10. Replace with new part	Replace with new part.
11. Return unit for repair	Return unit for repair.
12. Check pump-mounting bolts	Bolts should be 15 to 18 ft. lbs.
13. Inlet screen clogged	Clean inlet screen or replace.
14. Check wall outlet voltages and wiring	Make sure unit and wall outlet are wired properly.

MOTOR WILL NOT RUN

POSSIBLE CAUSE

1. Fuse blown, (5,2,1,3,4)
2. Limit switch burned out, (1,2,3,4)
3. Microswitch burned out, (1,2,3,4)
4. Motor burned out, (1,2,3,4,6)
5. Voltage to motor incorrect, (2,1,8)

REMEDY	***INSTRUCTION***
1. Check for correct voltage	Compare supply voltage with voltage on motor name tag. Check that the wire is sized correctly. N.E.C. table 310-12 requires AWG 10 for 25 Amps.
2. Check motor is wired correctly	Compare wiring of motor to electrical diagram on drawing.
3. Don't use extension cords	According to N.E.C. : " The size of the conductors… should be such that the voltage drop would not exceed 3% to the farthest outlet for power…" Do not run motor at 115 VAC – damage to the motor will occur.
4. Replace with new part	Replace with new part.
5. Reset circuit breaker/fuse	Reset circuit breaker/fuse.
6. Return unit for repair	Return unit for repair.
7. See Installation Manual	See Installation Manual.
8. Check wall outlet voltage and wiring	Make sure unit and wall outlet is wired properly. Motor must run at 208/230 VAC.

LIFT LOWERS SLOWLY OR NOT AT ALL

POSSIBLE CAUSE

1. Cylinders binding, (1)
2. Release valve clogged, (5,4,2,3)
3. Pressure fitting too long, (6)

REMEDY	***INSTRUCTION***
1. See Installation Manual	Consult Lift Manufacturer.
2. Replace with new part	Replace with new part.
3. Return for repair	Return for repair.
4. Check oil.	Use clean 10-WT hydraulic oil or Dexron-III automatic transmission fluid only. If ATF is contaminated, replace with clean ATF and clean entire system.
5. Clean release valve	Wash release valve in solvent and blow out with air.
6. Replace fitting with short thread lead	Replace fitting with short thread lead.

WILL NOT RAISE LOADED LIFT

POSSIBLE CAUSE

1. Air in oil, (1,2,3,4)
2. Cylinder binding, (5)
3. Cylinder leaks internally, (5)
4. Lift overloaded, (6,5)
5. Lowering valve leaks, (7,8,1,5,9)
6. Motor runs backwards, (10,12,9)
7. Pump damaged, (5,9)
8. Pump won't prime, (1,2,3,4,5,11,9)
9. Relief valve leaks, (8,5,9)
10. Voltage to motor incorrect, (10,12,5)

REMEDY	***INSTRUCTION***
1. Check oil level	The oil level should be up to the bleed screw in the reservoir with the lift all the way down.
2. Check/Tighten inlet tubes	Replace inlet hose assembly.
3. Oil seal damaged or cocked	Replace oil seal and install.
4. Bleed cylinders	See Installation Manual.
5. See Installation Manual	Consult Lift Manufacturer.
6. Check vehicle weight	Compare weight of vehicle to weight limit of the lift.
7. Flush release valve	Hold release handle down and start unit allowing it to run for 15 seconds.
8. Replace with new part	Replace with new part.
9. Return unit for repair	Return unit for repair.
10. Check motor is wired correctly	Compare wiring of motor to electrical diagram on power unit drawing.
11. Inlet screen clogged	Clean inlet screen or replace.
12. Check wall outlet voltage and wiring	Make sure unit and wall outlet is wired properly.

REVISION				
REV	DESCRIPTION	DATE	EDITED BY	ECO#
A	PRODUCTION RELEASE	09/22/2008	GJZ	00242

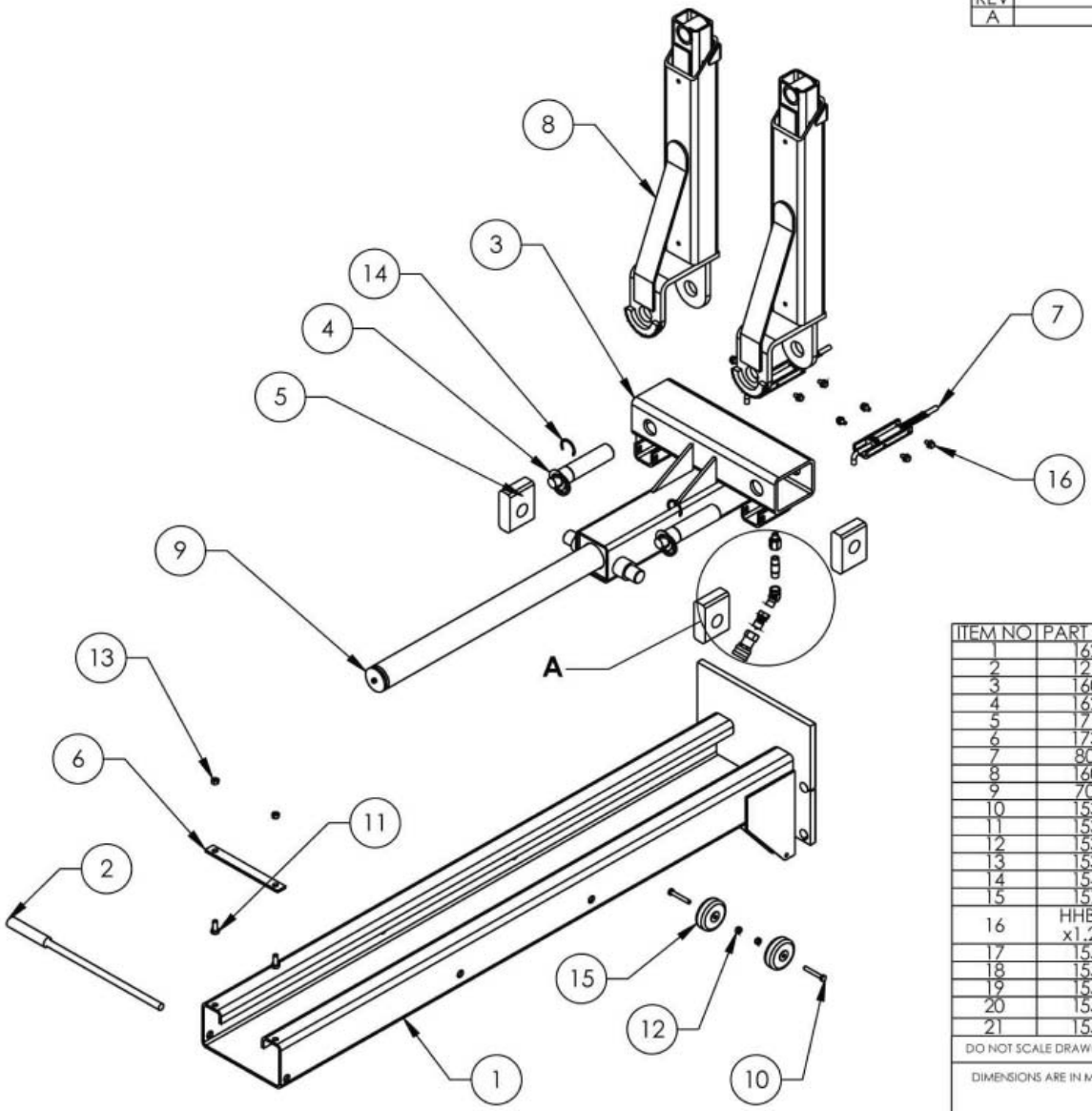

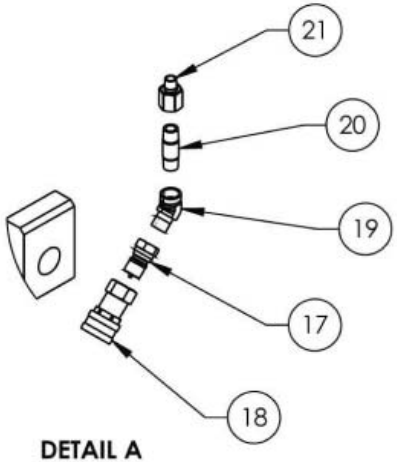

DETAIL A
SCALE 2 : 15

ITEM NO	PART NUMBER	DESCRIPTION	QTY	REV
1	620178	POST WELDMENT	1	A
2	1215145	SAFETY PIN ASSEMBLY	1	A
3	1600049	LIFT HEAD WELDMENT	1	A
4	1620180	LIFT HEAD PIN WELDMENT	2	A
5	1716012	SLIDE BLOCK	4	A
6	1736138	POST STRAP	1	A
7	800168	ARM LOCK ASSEMBLY	2	PRE-004
8	1600068	ARM WELDMENT	2	A
9	700200	CYLINDER ASSEMBLY Ø2.0 x 42	1	A
10	1530094	HHB M8 x 1.25 x 55mmL	2	-
11	1530738	HEX HEAD BOLT M10 x 1.5 x 25	2	-
12	1535001	NUT M8 x 1.25 NL	2	-
13	1535013	NUT M10 x 1.5 NL	2	-
14	1540281	CRESCENT SNAP RING 5103-150	2	-
15	1575009	WHEEL	2	A
16	HHB SF M8 x1.25 x 12	SERRATED HEX FLANGE CAP SCREW	8	-
17	1550014	3/8'-18 NPT M QUICK-DISC. COUPLING	1	-
18	1550015	3/8'-18 NPT F QUICK-DISC. COUPLING	1	-
19	1550027	FTG 45FLB-06 NPT x -06 NPT	1	-
20	1550016	3/8-18 NPT M To M Nipple 2"Long	1	-
21	1550017	Reducer, 3/8-18 NPT F-1/4-18 NPT M	1	-

DO NOT SCALE DRAWING

DIMENSIONS ARE IN MM

	NAME	DATE
DRAWN	GJZ	09/22/2008
CHECKED	TM	02/20/2009

THIRD ANGLE PROJECTION

MATERIAL: ---

SIZE: ---

PROPRIETARY AND CONFIDENTIAL
THE INFORMATION CONTAINED IN THIS DRAWING IS THE SOLE PROPERTY OF **DANNMAR INC.** ANY REPRODUCTION IN PART OR AS A WHOLE WITHOUT THE WRITTEN PERMISSION OF **DANNMAR INC.** IS PROHIBITED.

TITLE: PART DWG. 1

SIZE	DWG. NO.	REV
A	5215146	A

SCALE: 1:15

SHEET 1 OF 2

NEXT ASSEMBLY
5260123

NOTE: UNLESS OTHERWISE SPECIFIED.
1. ASSEMBLE ITEMS AS SHOWN

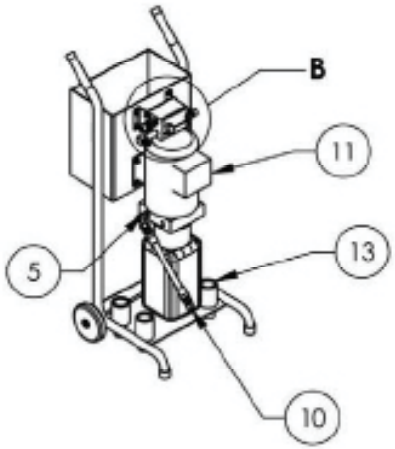

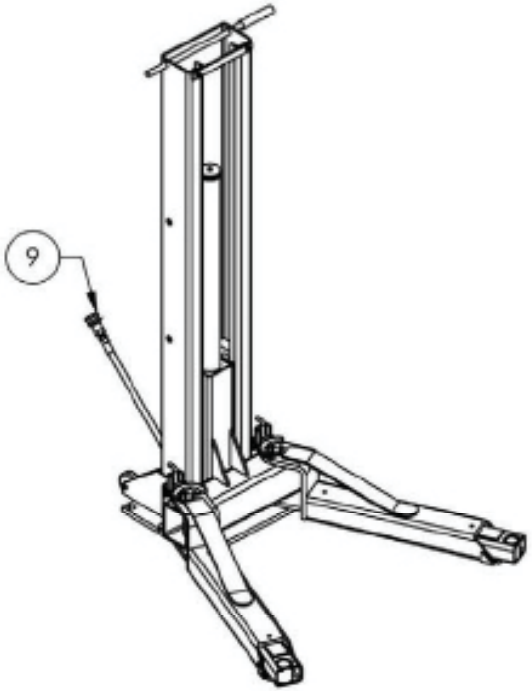

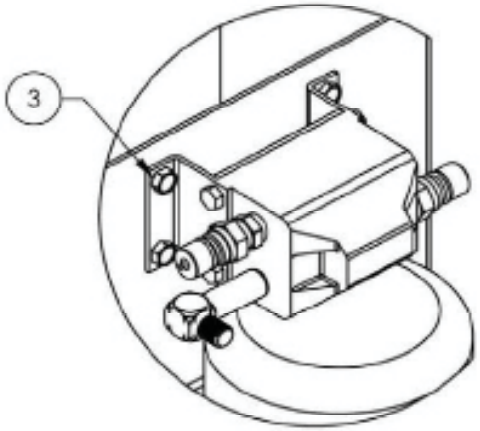

DETAIL B
SCALE 1 : 4

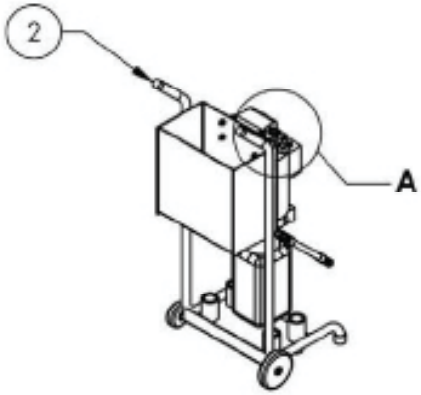

OPTIONAL CRADLE AND SCREW PAD ADAPTERS

Adjustable Frame Cradle Pads

Screw Pad Adapter

Frame Cradle Pad

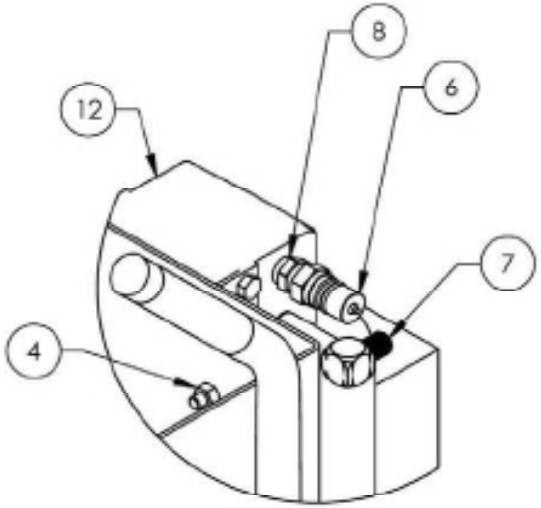

DETAIL A
SCALE 1 : 4

Optional Equipment and service parts available through your Authorized Dannmar Equipment Dealer.

TITLE: PART DWG. 2		
SIZE A	DWG. NO. 5260123	REV A
SCALE: 1:20		SHEET 2 OF 2

DANNMAR EQUIPMENT
646 Flinn Ave. Suite A
Moorpark, CA. 93021
Tel: 1-877-432-6627
Fax: 1-805-530-1909

www.maxjaxusa.com
www.dannmar.com