Model	Year	MG	SG	Illustration	Restrictions	UPD	6:58	27.10.2023
928	1978	1	01	101-000		738		

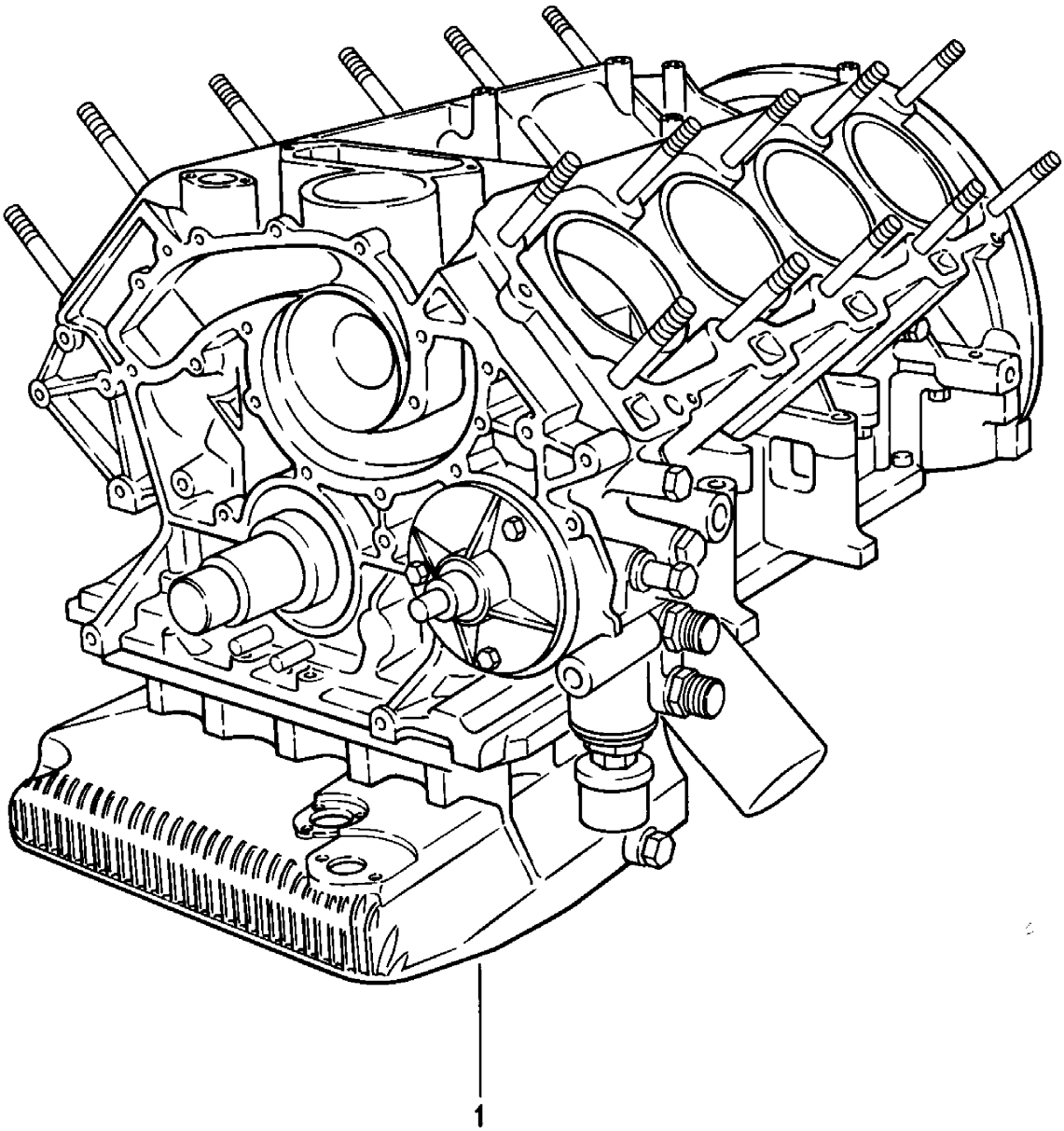

Model	Year	MG	SG	Illustration	Restrictions	UPD	6:58	27.10.2023
928	1978	1	01	101-000		738		

Pos	Part Number	Description	Remark	Qty	Model
		Replacement engine **Ready for installation**			
-	928 100 921 01	**Replacement engine** **D >> - MJ 1979** **Discontinued part**		1	2801
-	928 100 922 02	**Replacement engine** **D >> - MJ 1979** **Discontinued part**	AUT.	1	2802
-	928 100 925 09	**Replacement engine** **D - MJ 1980>>** **Discontinued part**		1	2809
-	928 100 926 10	**Replacement engine** **D - MJ 1980>>** **Discontinued part**	AUT.	1	2810
-	928 100 911 02	**Short block** **D - MJ 1980>>**		1	2811
-	928 100 911 02	**Short block** **D - MJ 1980>>**	AUT.	1	2812
-		**Short block** **with:** **Crankshaft** **piston** **oil pump** **oil sump**			
1	928 100 911 00	**Short block** **D >> - MJ 1979**		1	-04 2801
(1)	928 100 911 01	**Short block** **D - MJ 1980>>**		1	2809,2810
(1)	928 100 911 02	**Short block**		1	2811,2812

Model	Year	MG	SG	Illustration	Restrictions	UPD	6:58	27.10.2023
928	1978	1	01	101-005		738		

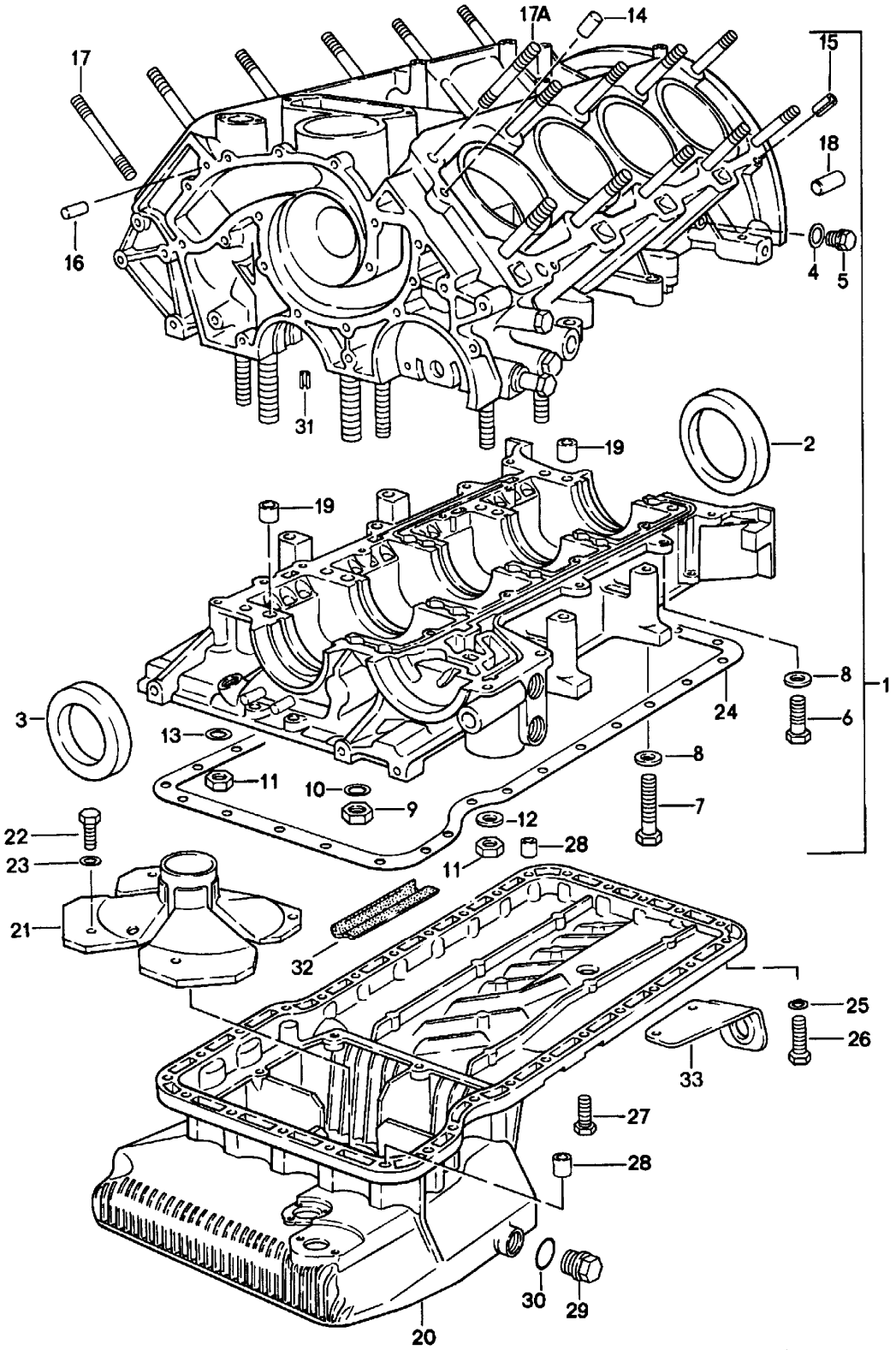

Model	Year	MG	SG	Illustration	Restrictions	UPD	6:58	27.10.2023
928	1978	1	01	101-005		738		

Pos	Part Number	Description	Remark	Qty	Model
		Crankcase housing			
1	928 101 905 01	cylinder block with pistons Mounting 1 D >> - MJ 1979	Closed	1	-04 2801
(1)	928 101 906 00	cylinder block with pistons Mounting 1	Open	1	2809,2810
(1)	928 101 906 01	cylinder block with pistons Mounting 1 D - MJ 1980>>	Closed	1	2809,2810
(1)	928 101 907 01	Crankcase housing with: piston Mounting 1		1	2811,2812
(1)	928 101 907 AX	Crankcase housing with: piston Mounting 1	Closed	1	2811,2812
2	999 113 264 40	Radial shaft seal 90 X 110 X 12 Discontinued part		1	
2	999 113 461 40	Radial shaft seal 90 X 110 X 12 Discontinued part		1	
2	999 113 426 40	Radial shaft seal 90 X 110 X 12 Discontinued part		1	
2	999 113 426 41	Radial shaft seal 90 X 110 X 12 Gasket set for engine see illustration:	198-000	1	
3	999 113 263 40	Shaft oil seal D >> - MJ 1980		1	
3	999 113 263 40	Shaft oil seal 60 X 85 X 10 D - MJ 1981>>		1	
4	900 123 055 30	seal ring		2	
5	N 029 703 1	sealing plug M 12 X 1,5 X 16		2	
6	900 075 099 02	Hexagon bolt M 8 X 30 Discontinued part		6	

Model	Year	MG	SG	Illustration	Restrictions	UPD	6:58	27.10.2023
928	1978	1	01	101-005		738		

Pos	Part Number	Description	Remark	Qty	Model
6	900 075 099 03	Hexagon bolt M 8 X 30		6	
7	N 010 361 4	Hexagon bolt M 8 X 65 Discontinued part		10	
7	N 010 361 13	Hexagon bolt M 8 X 65		10	
8	900 025 007 02	Washer A 8,4 Discontinued part		16	
8	900 025 007 03	Washer A 8,4		16	
9	N 011 020 8	Hexagon nut M 12 X 1,5 Discontinued part		10	
9	900 034 036 01	Hexagon nut M 12 X 1,5		10	
10	928 101 301 02	Washer		10	
11	N 011 010 13	Hexagon nut M 10		12	
12	900 025 008 09	Washer A 10,5 Discontinued part		2	
12	900 025 008 04	Washer A 10,5		2	
12	900 025 008 0E	Washer A 10,5	yellow	2	
13	928 101 303 00	Washer		10	
14	999 012 034 00	Cylinder pin 8 M 6 X 12		4	
15	900 095 072 01	Spring pin 6 X 12		2	
16	N 013 199 1	Cylinder pin 6 X 12		2	
17	928 101 187 06	Threaded pin 193 MM		18	
17A	928 101 186 04	Threaded pin 142 MM		2	
18	900 012 070 00	Cylinder pin 12 X 18		2	
19	928 101 195 02	dowel sleeve D >> - MJ 1980		2	

Model	Year	MG	SG	Illustration	Restrictions	UPD	6:58	27.10.2023
928	1978	1	01	101-005		738		

Pos	Part Number	Description	Remark	Qty	Model
(19)	928 101 195 03	dowel sleeve D - MJ 1981>>		1	
20	928 101 208 00	oil sump only in conj. with: 944.107.197.00 also use:	 928 107 167 00 999 701 591 40 900 075 015 02	1	
21	928 107 139 04	Surge lock		1	
22	999 072 005 09	Hexagon nut M 6 X 12 Discontinued part		4	
22	999 072 005 01	Hexagon bolt M 6 X 12		4	
23	900 025 014 02	Washer B 6,4		4	
24	928 101 207 00	gasket for oil sump Repair set for maintenance see illustration:	 198-000	1	
25	999 025 108 02	Washer B 6,4 X 14 No longer use the part here		25	
26	900 075 135 02	Hexagon bolt M 6 X 28 No longer use the part here		25	
26	900 075 347 02	Bolt with washer M 6 X 28 Z1		25	
27	900 075 333 02	Bolt with washer M 6 X 25 Z2 Discontinued part		5	
27	900 075 333 01	Bolt with washer M 6 X 25 Z2		5	
28	928 101 189 00	Centre sleeve		2	
29	911 107 176 03	sealing plug M >> 801 0299 M >> 801 5333 M >> 821 0679 M >> 821 5652		1	
29	944 107 197 01	sealing plug only in conj. with: 928.101.201.10		1	
30	900 123 118 30	seal ring Repair set for maintenance see illustration: engine oil see illustration:	 198-000 198-005	1	

Model	Year	MG	SG	Illustration	Restrictions	UPD	6:58	27.10.2023
928	1978	1	01	101-005		738		

Pos	Part Number	Description	Remark	Qty	Model
31	N 013 315 1	spring pin 5 X 10 D - MJ 1982>> - MJ 1982		1	
32	928 604 121 00	insulating piece		1	
33	928 423 221 01	Bracket II		1	

Model	Year	MG	SG	Illustration	Restrictions	UPD	6:59	27.10.2023
928	1978	1	02	102-000		738		

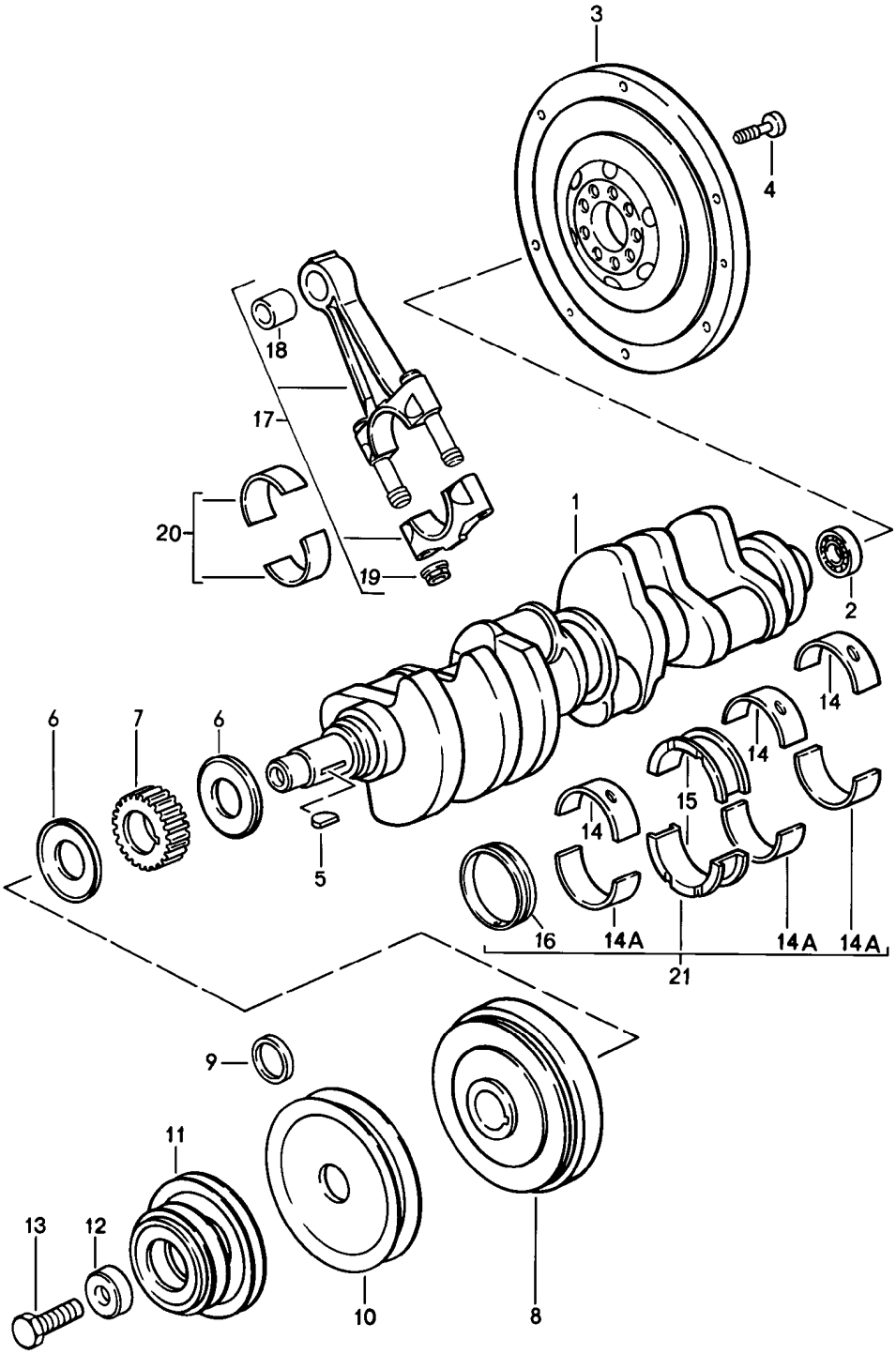

Model	Year	MG	SG	Illustration	Restrictions	UPD	6:59	27.10.2023
928	1978	1	02	102-000		738		

Pos	Part Number	Description	Remark	Qty	Model
		Crankshaft conrod			
1	928 102 011 21	Crankshaft Discontinued part		1	
1	928 102 011 28	Crankshaft		1	
2	928 102 111 02	grooved ball bearing		1	
3	928 102 202 04	flywheel D >> - MJ 1979		1	
(3)	928 102 202 10	flywheel D - MJ 1980>> Discontinued part		1	
3	928 102 202 10	flywheel D - MJ 1982>> - MJ 1982		1	2809,2810
(3)	928 102 075 00	flywheel Discontinued part	AUT.	1	
(3)	928 102 075 00	flywheel	AUT.	1	
4	928 102 151 01	Socket head bolt		9	
5	900 118 014 00	woodruff key		1	
6	928 102 125 02	shouldered washer		2	
7	928 105 125 03	gear vibration damper		1	
8	928 102 120 14	vibration damper Black D >> - MJ 1979		1	-04 2801
(8)	928 102 120 15	vibration damper red		1	2811,2812
(8)	928 102 120 16	vibration damper blue		1	-12 2809 "S..","AUS"
8	928 102 120 17	vibration damper Grey D - MJ 1980>>		1	2809,2810
9	928 102 126 00	Shim		1	
(10)	928 102 115 00	v-belt pulley M >> 818 1765 M >> 818 9378	 AUT.	1	-04 2801
(10)	928 102 118 00	v-belt pulley M 818 1766 >> M 818 9379 >> D >> - MJ 1979	 AUT.	1	

Model	Year	MG	SG	Illustration	Restrictions	UPD	6:59	27.10.2023
928	1978	1	02	102-000		738		

Pos	Part Number	Description	Remark	Qty	Model
10	928 102 118 03	v-belt pulley D - MJ 1980>>		1	
11	928 102 116 05	v-belt pulley D >> - MJ 1981		1	
11	928 102 139 02	pulley for Alternator 928.603.114.00 D - MJ 1982>>		1	
12	928 102 124 01	pressure washer		1	
13	900 083 036 02	Hexagon bolt Discontinued part		1	
13	900 083 036 01	Hexagon bolt		1	
14	928 101 115 02	crankshaft bearing shell		X	
	08/77-07/82001	crankshaft bearing shell			
14	928 101 115 50	crankshaft bearing shell	0.25 u.s. upper 2,4,5	X	
14	928 101 115 60	crankshaft bearing shell	0.5 u.s. upper 2,4,5	X	
14A	928 101 115 03	crankshaft bearing shell		X	
	08/77-07/82001	crankshaft bearing shell			
14A	928 101 115 51	crankshaft bearing shell	0.25 u.s. lower 2,4,5	X	
14A	928 101 115 61	crankshaft bearing shell	0.5 u.s. lower 2,4,5	X	
15	928 101 133 03	bearing shell 3		2	
15	928 101 133 53	bearing shell 3	0.25 u.s.	X	
15	928 101 133 57	bearing shell 3	0.25 u.s.	X	
15	928 101 133 63	bearing shell 3	0.5 u.s.	X	
15	928 101 133 64	bearing shell 3	0.5 u.s.	X	
16	928 101 117 08	Bearing bush		1	
16	928 101 117 58	Bearing bush	0.25 u.s.	1	

Model	Year	MG	SG	Illustration	Restrictions	UPD	6:59	27.10.2023
928	1978	1	02	102-000		738		

Pos	Part Number	Description	Remark	Qty	Model
16	928 101 117 68	Bearing bush	0.5 u.s.	1	
17	928 103 004 00	conrod		8	
-	928 103 173 03	bolt - connecting rod		8	
18	928 103 133 00	bush - connecting rod		8	
19	928 103 172 02	Nut		16	
20	928 103 143 02	connecting rod bearing shell Discontinued part		16	
20	928 103 143 05	connecting rod bearing shell		16	
	08/77-07/82002	red			
20	928 103 143 52	connecting rod bearing shell	0.25 u.s.	16	
20	928 103 143 57	connecting rod bearing shell D >> - MJ 1980 Discontinued part	0.25 u.s.	16	
20	928 103 143 57	connecting rod bearing shell D - MJ 1981>>	0.25 u.s.	X	
21	928 101 901 01	1 set: crankshaft bearings crankshaft bearing Engine with: Mounting 1	 2-part	1	
21	928 101 901 51	1 set: crankshaft bearings crankshaft bearing Engine with: Mounting 1	0.25 u.s. 2-part	1	
21	928 101 901 61	1 set: crankshaft bearings crankshaft bearing Engine with: Mounting 1	0.5 u.s. 2-part	1	
21	928 101 901 02	1 set: crankshaft bearings Engine with: Mounting 1	 Closed	1	
21	928 101 901 52	1 set: crankshaft bearings Engine with: Mounting 1	0.25 u.s. Closed	1	

Model	Year	MG	SG	Illustration	Restrictions	UPD	6:59	27.10.2023
928	1978	1	02	102-000		738		

Pos	Part Number	Description	Remark	Qty	Model
21	**928 101 901 62**	**1 set: crankshaft bearings** **Engine** **Mounting** **1**	**0.5 u.s.** **Closed**	**1**	

Model	Year	MG	SG	Illustration	Restrictions	UPD	6:59	27.10.2023
928	1978	1	02	102-005		738		

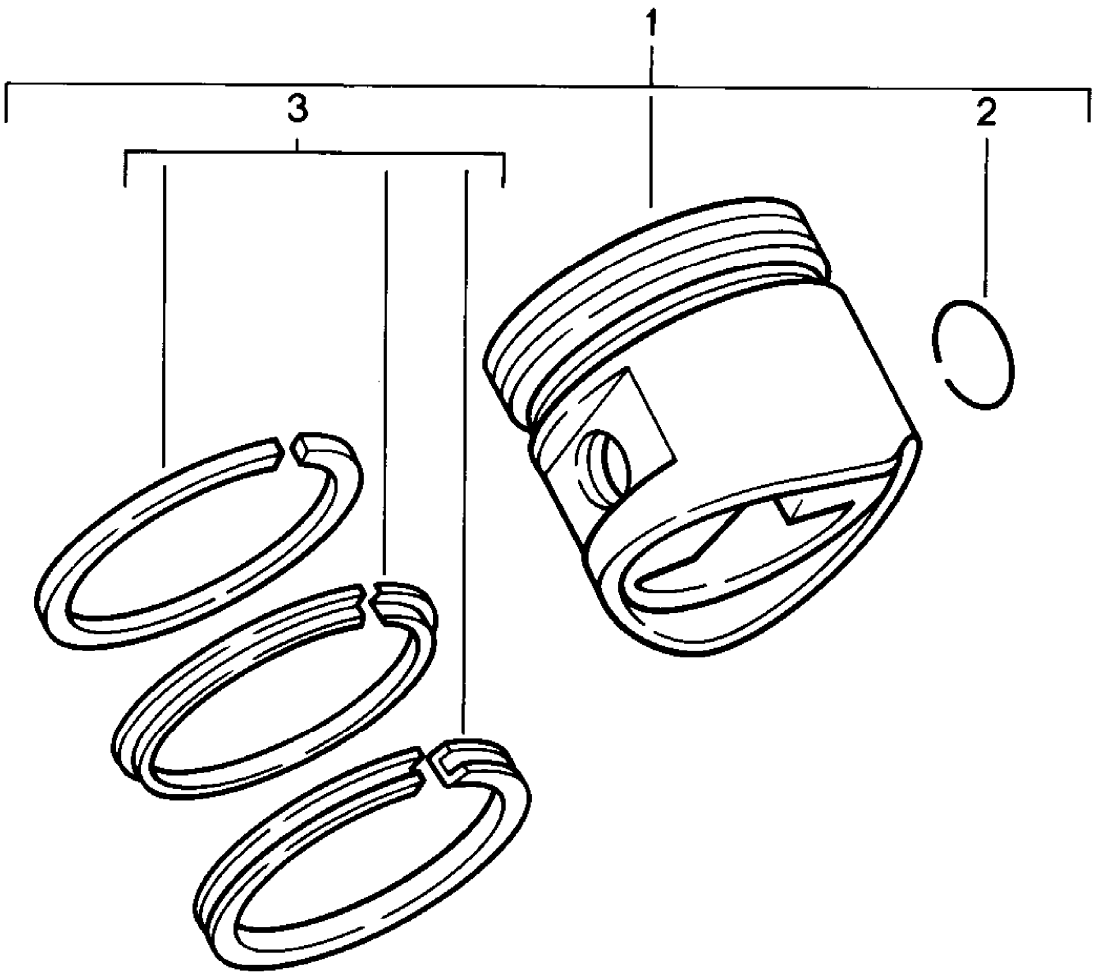

Model	Year	MG	SG	Illustration	Restrictions	UPD	6:59	27.10.2023
928	1978	1	02	102-005		738		

Pos	Part Number	Description	Remark	Qty	Model
		piston piston ring			
1	928 103 074 03	piston 95,00 MM Dimension group 0	- KS -	8	-04 2801
(1)	928 103 074 13	piston 95,00 MM Dimension group 1	- KS -	X	-04 2801
(1)	928 103 074 23	piston 95,00 MM Dimension group 2	- KS -	X	-04 2801
(1)	928 103 074 53	piston 95,50 MM Dimension group 0	- KS -	X	-04 2801
(1)	928 103 074 63	piston 95,50 MM Dimension group 1	- KS -	X	-04 2801
(1)	928 103 074 73	piston 95,50 MM Dimension group 2	- KS -	X	-04 2801
(1)	928 103 074 58	piston 96,00 MM Dimension group 0	- KS -	X	-04 2801
(1)	928 103 088 00	piston 95,00 MM Dimension group 0 D - MJ 1980>>	- KS -	8	2809,2810
(1)	928 103 088 10	piston 95,00 MM Dimension group 1 D - MJ 1980>>	- KS -	X	2809,2810
(1)	928 103 088 20	piston - KS - 95,00 MM Dimension group 2 D - MJ 1980>>		X	2809,2810
(1)	928 103 088 50	piston 95,50 MM Dimension group 0 D - MJ 1980>>	- KS -	X	2809,2810

Model	Year	MG	SG	Illustration	Restrictions	UPD	6:59	27.10.2023
928	1978	1	02	102-005		738		

Pos	Part Number	Description	Remark	Qty	Model
(1)	928 103 088 60	piston 95,50 MM Dimension group 1 D - MJ 1980>>	- KS -	X	2809,2810
(1)	928 103 088 70	piston 95,50 MM Dimension group 2 D - MJ 1980>>	- KS -	X	2809,2810
(1)	928 103 086 00	piston MAHLE 97,00 MM Dimension group 0		8	2811,2812
(1)	928 103 086 10	piston MAHLE 97,00 MM Dimension group 1		X	2811,2812
(1)	928 103 086 20	piston MAHLE 97,00 MM Dimension group 2		X	2811,2812
(1)	928 103 086 50	piston MAHLE 97,50 MM Dimension group 0		X	2811,2812
(1)	928 103 086 60	piston MAHLE 97,50 MM Dimension group 1		X	2811,2812
(1)	928 103 086 70	piston MAHLE 97,50 Dimension group 2		X	2811,2812
(1)	928 103 086 55	piston MAHLE 98,00 MM Dimension group 0		X	2811,2812
(1)	928 103 086 65	piston MAHLE 98,00 MM Dimension group 1		X	2811,2812
(1)	928 103 086 75	piston MAHLE 98,00 MM Dimension group 2		X	2811,2812
2	N 012 277 1	snap ring		16	
3	928 103 902 00	1 set: piston rings 95,00 MM D >> - MJ 1979		X	-04 2801

Model	Year	MG	SG	Illustration	Restrictions	UPD	6:59	27.10.2023
928	1978	1	02	102-005		738		

Pos	Part Number	Description	Remark	Qty	Model
(3)	928 103 903 00	1 set: piston rings 95,50 MM D >> - MJ 1979		X	-04 2801
(3)	928 103 904 00	1 set: piston rings 96,00 MM D >> - MJ 1979		X	-04 2801
(3)	928 103 905 04	1 set: piston rings 95,00 MM D - MJ 1980>>		X	
(3)	928 103 905 05	1 set: piston rings 95,50 MM D - MJ 1980>>		X	
(3)	928 103 905 06	1 set: piston rings 96,00 MM D - MJ 1980>>		X	
(3)	928 103 906 11	1 set: piston rings 97,00 MM		X	2811,2812
(3)	928 103 906 12	1 set: piston rings 97,50 MM		X	2811,2812

Model	Year	MG	SG	Illustration	Restrictions	UPD	6:59	27.10.2023
928	1978	1	03	103-000		738		

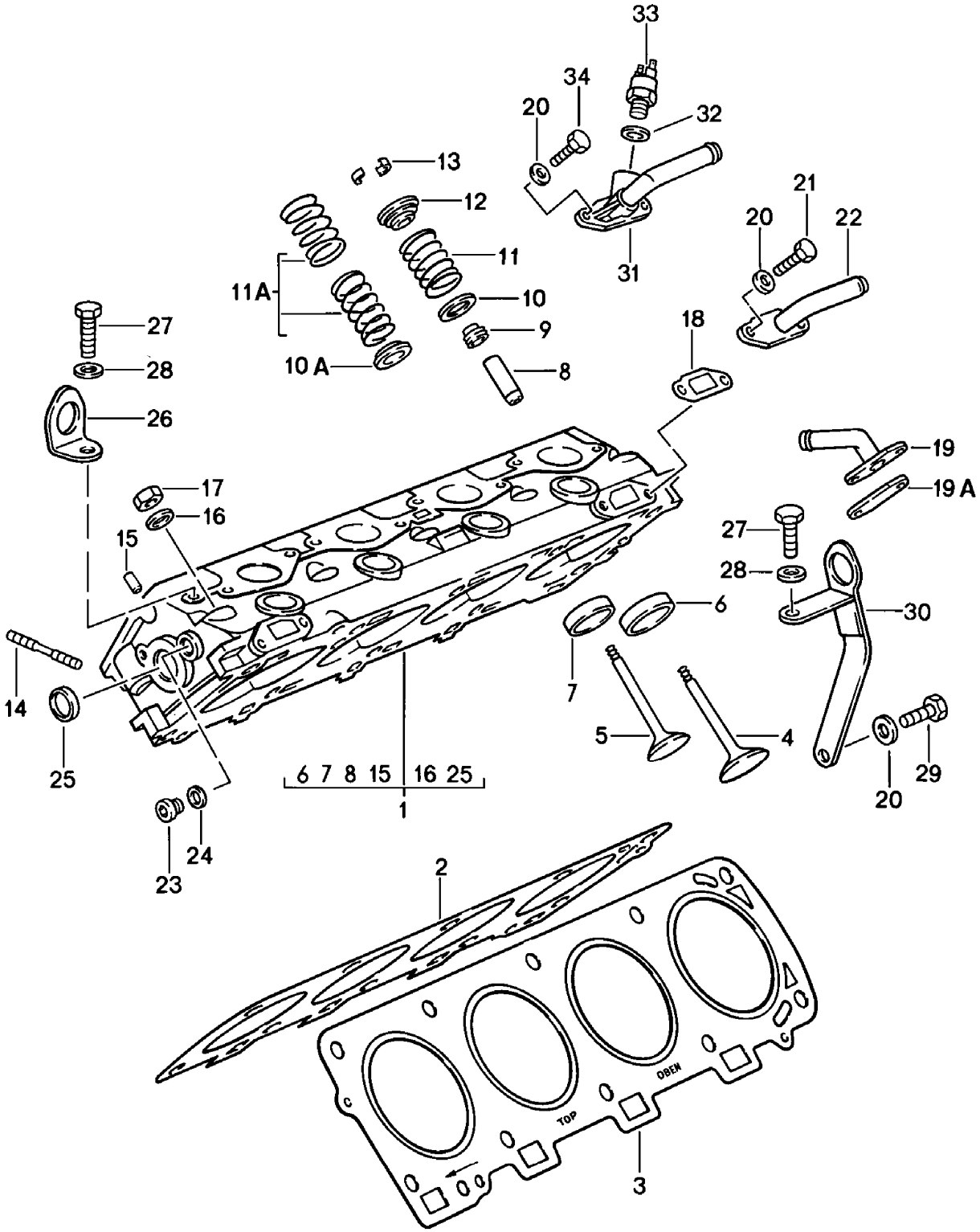

Model	Year	MG	SG	Illustration	Restrictions	UPD	6:59	27.10.2023
928	1978	1	03	103-000		738		

Pos	Part Number	Description	Remark	Qty	Model
		Cylinder head			
1	928 104 046 04	Cylinder head		2	-04 2801
1	928 104 046 DX	Cylinder head		2	-04 2801
(1)	928 104 053 01	Cylinder head		2	2809,2810
(1)	928 104 055 05	Cylinder head		2	2811,2812
2	928 104 371 12	Cylinder head gasket Discontinued part Repair set for maintenance see illustration:	right 198-000	1	-04 -18 2801,2809, 2810,2813
2	928 104 371 12	Cylinder head gasket (asbestos free)	right	1	-04 -18 2801,2804, 2809,2810, 2813
2	928 104 361 07	Cylinder head gasket Discontinued part	right	1	2811,2812
2	928 104 361 07	Cylinder head gasket (asbestos free)	right	1	2811,2812
2	928 104 361 15	Cylinder head gasket (asbestos free) for Cylinder head Processed	right	1	2811,2812
3	928 104 372 12	Cylinder head gasket Discontinued part	left	1	-04 -18 2801,2809, 2810,2813
3	928 104 372 12	Cylinder head gasket (asbestos free)	left	1	-04 -18 2801,2809, 2810,2813
3	928 104 362 07	Cylinder head gasket Discontinued part	left	1	2811,2812
3	928 104 362 07	Cylinder head gasket (asbestos free)	left	1	2811,2812
3	928 104 362 15	Cylinder head gasket (asbestos free) for Cylinder head Processed	left	1	2811,2812
4	928 105 413 00	Inlet valve		8	-04 -18 2801,2809, 2810,2813

Model	Year	MG	SG	Illustration	Restrictions	UPD	6:59	27.10.2023
928	1978	1	03	103-000		738		

Pos	Part Number	Description	Remark	Qty	Model
(4)	928 105 409 02	Inlet valve		8	2811,2812
5	928 105 417 03	exhaust valve		8	-04 -18 2801,2809, 2810,2813
(5)	928 105 410 00	exhaust valve		8	2811,2812
6	928 104 338 55	Valve seat ring (inlet) oversize D >> - MJ 1979 Discontinued part	Inlet	8	-04 2801
(6)	928 104 338 55	Valve seat ring (inlet) oversize D - MJ 1980>>	Inlet	8	-18 2809,2810, 2813
(6)	944 104 331 51	Valve seat ring (inlet) oversize	Inlet	8	2811,2812
7	928 104 336 55	Valve seat ring (outlet) oversize D >> - MJ 1979 Discontinued part	Outlet	8	-04 2801
(7)	928 104 336 55	Valve seat ring (outlet) oversize D - MJ 1980>>	Outlet	8	-18 2809,2810, 2813
(7)	944 104 333 50	Valve seat ring (outlet) oversize	Outlet	8	2811,2812
8	928 104 328 51	Valve guide 1. oversize		16	-04 -18 2801,2809, 2810,2813
(8)	944 104 328 51	Valve guide 1. oversize		16	2811,2812
(8)	944 104 328 51	Valve guide 1. oversize		16	2811,2812
9	911 104 193 03	Valve stem seal		16	-04 -18 2801,2809, 2810,2813
9	928 104 193 03	Valve stem seal Discontinued part		16	2811,2812
9	928 104 193 12	Valve stem seal Discontinued part		16	2811,2812
(9)	928 104 193 13	Valve stem seal Discontinued part		16	2811,2812

Model	Year	MG	SG	Illustration	Restrictions	UPD	6:59	27.10.2023
928	1978	1	03	103-000		738		

Pos	Part Number	Description	Remark	Qty	Model
(9)	964 104 111 07	Valve stem seal		16	2811,2812
10	928 105 461 01	Washer D >> - MJ 1979		X	-04 2801
(10)	928 105 468 01	Washer 0,5 MM D - MJ 1980>>		X	-18 2809,2810, 2813
(10)	928 105 468 01	Washer 0,5 MM M >> 821 0515 M >> 821 5502		16	2811,2812
(10)	928 105 468 03	Washer 0,5 MM M 821 0516 >> M 821 5503 >> D - MJ 1981>>		X	2811,2812
(10)	928 105 470 01	Washer 1,0 MM D - MJ 1980>>		X	-18 2809,2810, 2813
(10)	928 105 470 01	Washer 1,0 MM M >> 821 0515 M >> 821 5502		X	2811,2812
(10)	928 105 470 03	Washer M 821 0516 >> M 821 5503 >> D - MJ 1981>>		X	2811,2812
10A	928 105 469 02	Washer		16	-04 -18 2801,2809, 2810,2813
10A	928 105 469 02	Washer M >> 821 0515 M >> 821 5502		16	2811,2812
(10A)	928 105 469 06	Washer M 821 0516 >> M >> 82C 0553 D >> - MJ 1981 Discontinued part		16	2811,2812
-		M 821 5503 >> M >> 82C 5592			
(10A)	928 105 469 06	Washer M 82C 0554 >> M 82C 5593 >> D - MJ 1982>> - MJ 1982		16	2811,2812

Model	Year	MG	SG	Illustration	Restrictions	UPD	6:59	27.10.2023
928	1978	1	03	103-000		738		

Pos	Part Number	Description	Remark	Qty	Model
(10A)	928 105 469 52	Washer 1. oversize		X	2811,2812
(10A)	928 105 469 62	Washer 2. oversize		X	2811,2812
11	928 105 341 05	Valve spring D >> - MJ 1979		16	-04 2801
11A	928 105 903 00	1 set of valve springs D - MJ 1980>>		16	-18 2809,2810, 2813
(11A)	928 105 905 00	1 set of valve springs M >> 821 0515 M >> 821 5502		16	2811,2812
(11A)	928 105 905 02	1 set of valve springs M 821 0516 >> M >> 82C 0553 M 821 5503 >> M >> 82C 5592 Discontinued part		16	2811,2812
(11A)	928 105 905 09	1 set of valve springs M 821 0516 >> M 821 5503 >>		16	2811,2812
12	928 105 424 02	spring disc D >> - MJ 1979		16	-04 2801
(12)	928 105 449 01	spring disc D - MJ 1980>>		16	-18 2809,2810, 2813
(12)	928 105 449 01	spring disc M >> 821 0515 M >> 821 5502		16	2811,2812
(12)	928 105 449 04	spring disc M 821 0516 >> M >> 82C 0553 M 821 5503 >> M >> 82C 5592 Discontinued part		16	2811,2812
(12)	928 105 449 04	spring disc M 821 0516 >> M 821 5503 >>		16	2811,2812
13	901 105 417 00	cotter, split		32	
14	999 062 044 02	Threaded pin M 8 X 30		16	
15	900 012 016 00	Cylinder pin		4	

Model	Year	MG	SG	Illustration	Restrictions	UPD	6:59	27.10.2023
928	1978	1	03	103-000		738		

Pos	Part Number	Description	Remark	Qty	Model
15	900 302 019 00	Cylinder pin		4	
16	928 101 301 02	Washer		20	
17	N 011 020 8	Hexagon nut M 12 X 1,5 Discontinued part		20	
17	900 034 036 01	Hexagon nut M 12 X 1,5		20	
18	928 106 197 02	Seal 1,5 MM		X	
19	928 104 223 00	Connector union D >> - MJ 1979	left	1	
19A	928 104 214 00	End cap D - MJ 1980>>	left	1	
20	900 025 007 02	Washer Discontinued part		5	
20	900 025 007 03	Washer		5	
21	900 075 079 02	Hexagon bolt M 8 X 22		4	
22	928 104 221 00	Connector union	right	1	
23	900 219 004 02	sealing plug		2	
24	900 123 018 30	seal ring		2	
25	900 036 005 02	End cap		4	
26	928 101 411 00	Transport handle		1	
27	N 010 253 7	Hexagon bolt M 10 X 22		2	
28	900 025 008 09	Washer Discontinued part		2	
28	900 025 008 04	Washer		2	
28	900 025 008 0E	Washer	yellow	2	
29	900 075 085 02	Hexagon bolt M 8 X 20		1	
30	928 101 412 01	Transportation shackle		1	
31	928 104 025 05	Connector union M >> 80C 0053 M >> 80C 5051 M >> 82C 0050 M >> 82C 5052		1	2809,2810, 2811,2812

Model	Year	MG	SG	Illustration	Restrictions	UPD	6:59	27.10.2023
928	1978	1	03	103-000		738		

Pos	Part Number	Description	Remark	Qty	Model
(31)	928 104 025 05	Connector union M 80C 0054 >> M 80C 5052 >> M 82C 0051 >> M 82C 5053 >>		1	2809,2810, 2811,2812
32	900 123 007 30	seal ring A 14 X 18		1	
33	928 605 104 00	temperature switch		1	
34	N 010 242 12	Hexagon bolt M 8 X 25		2	

Model	Year	MG	SG	Illustration	Restrictions	UPD	6:59	27.10.2023
928	1978	1	03	103-005		738		

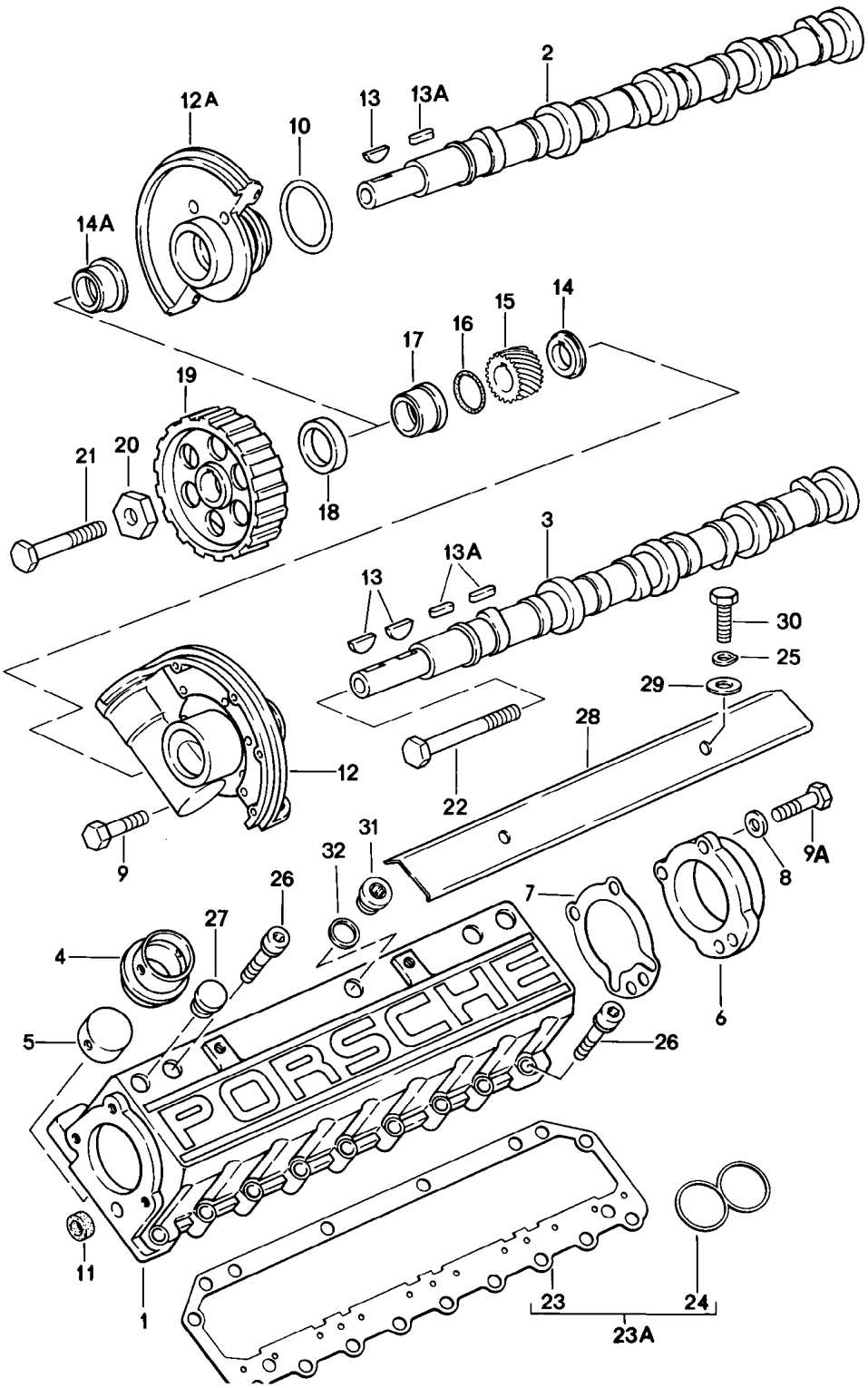

Model	Year	MG	SG	Illustration	Restrictions	UPD	6:59	27.10.2023
928	1978	1	03	103-005		738		

Pos	Part Number	Description	Remark	Qty	Model
		Camshaft			
1	928 105 251 00	Camshaft housing without: bush for Hydraulic tappet D - MJ 1981>>		2	
1	928 105 250 07	Camshaft housing See technical information GRP.1 NR. 11 D >> - MJ 1980 Discontinued part		2	
2	928 105 155 07	Camshaft D >> - MJ 1979	right Cylinders 1-4	1	-04 2801
(2)	928 105 173 01	Camshaft D - MJ 1980>>	right Cylinders 1-4	1	-18 2809,2810, 2813
(2)	928 105 187 03	Camshaft	right Cylinders 1-4	1	2811,2812
3	928 105 156 07	Camshaft D >> - MJ 1979	left Cylinder 5-8	1	-04 2801
(3)	928 105 174 01	Camshaft D - MJ 1980>>	left Cylinder 5-8	1	-18 2809,2810, 2813
(3)	928 105 188 03	Camshaft	left Cylinder 5-8	1	2811,2812
4	928 105 206 06	bush D >> - MJ 1980		16	
5	928 105 311 06	Hydraulic tappet Discontinued part		16	
5	928 105 311 08	Hydraulic tappet		16	
6	928 105 153 04	Cover		2	
7	928 105 189 02	Seal		2	
8	N 011 524 7	Washer Discontinued part		6	
8	N 011 524 27	Washer		6	
9	900 075 333 02	Bolt with washer M 6 X 25 Z2 Discontinued part		6	
9	900 075 333 01	Bolt with washer M 6 X 25 Z2		6	

Model	Year	MG	SG	Illustration	Restrictions	UPD	6:59	27.10.2023
928	1978	1	03	103-005		738		

Pos	Part Number	Description	Remark	Qty	Model
9A	900 075 016 02	Hexagon bolt M 6 X 22 Discontinued part		6	
9A	900 075 016 03	Hexagon bolt M 6 X 22		6	
10	999 701 425 40	O-ring 52 X 4		2	2801,2802, 2803,2804
(10)	999 701 602 40	O-ring 50 X 5 See technical information GRP.1 NR.5		2	
11	928 105 184 00	seal ring Discontinued part		2	
11	928 105 184 01	seal ring		2	
12	928 105 136 04	camshaft bearing	left	1	
12A	928 105 119 04	camshaft bearing	right	1	
13	N 012 710 1	woodruff key D >> - MJ 1979		3	
13A	900 117 050 00	feather key D - MJ 1980>>		3	
14	928 105 131 01	spacer bush	left	1	
14A	928 105 139 02	spacer bush	right	1	
15	928 105 543 02	Drive wheel		1	
16	999 701 592 40	O-ring 23 X 2		2	
17	928 105 143 02	Spacer pipe		1	
18	999 113 282 40	Shaft oil seal		2	
19	928 105 545 04	camshaft gear		2	
20	928 105 565 00	Spacer		2	
21	N 010 470 7	Hexagon bolt M 10 X 70 Discontinued part		1	
21	N 010 470 1	Hexagon bolt M 10 X 70		1	
22	900 074 224 08	Hexagon bolt M 10 X 95		1	

Model	Year	MG	SG	Illustration	Restrictions	UPD	6:59	27.10.2023
928	1978	1	03	103-005		738		

Pos	Part Number	Description	Remark	Qty	Model
23A	928 105 901 00	Seal Camshaft housing M >> 801 0160 M >> 801 5140 M >> 821 0255 M >> 821 5222 Discontinued part		2	2809,2810, 2811,2812, 2815,2816, 2817,2818
23	944 105 199 03	Seal		2	
23	928 105 199 12	Seal Discontinued part		2	
23	944 105 199 03	Seal (asbestos free) M 801 0161 >> M 801 5141 >> M 821 0256 >> M 821 5223 >> Repair set for maintenance see illustration:	198-000	2	2809,2810, 2811,2812, 2815,2816, 2817,2818
24	928 105 427 01	O-ring Discontinued part		8	
24	928 105 427 02	O-ring		8	
24	928 105 427 02	O-ring (asbestos free) M >> 801 0160 M >> 801 5140 M >> 821 0255 M >> 821 5222		8	2809,2810, 2811,2812, 2815,2816, 2817,2818
25	N 012 226 5	Spring washer		4	
26	900 067 214 02	Socket head bolt Discontinued part		30	
26	900 067 214 01	Socket head bolt		30	
27	928 105 149 03	Sealing cap D >> - MJ 1979		12	
28	928 105 255 00	Heat shield D >> - MJ 1979		2	

Model	Year	MG	SG	Illustration	Restrictions	UPD	6:59	27.10.2023
928	1978	1	03	103-005		738		

Pos	Part Number	Description	Remark	Qty	Model
29	900 223 003 02	Washer 6,4 D >> - MJ 1979		4	
30	999 072 005 09	Hexagon nut M 6 X 12 D >> - MJ 1979 Discontinued part		4	
30	999 072 005 01	Hexagon bolt M 6 X 12		4	
31	900 219 009 30	sealing plug M 18 X 1,5 D - MJ 1980>>		12	
32	900 123 044 30	seal ring A 18 X 22 D - MJ 1980>>		12	

Model	Year	MG	SG	Illustration	Restrictions	UPD	7:00	27.10.2023
928	1978	1	03	103-010		738		

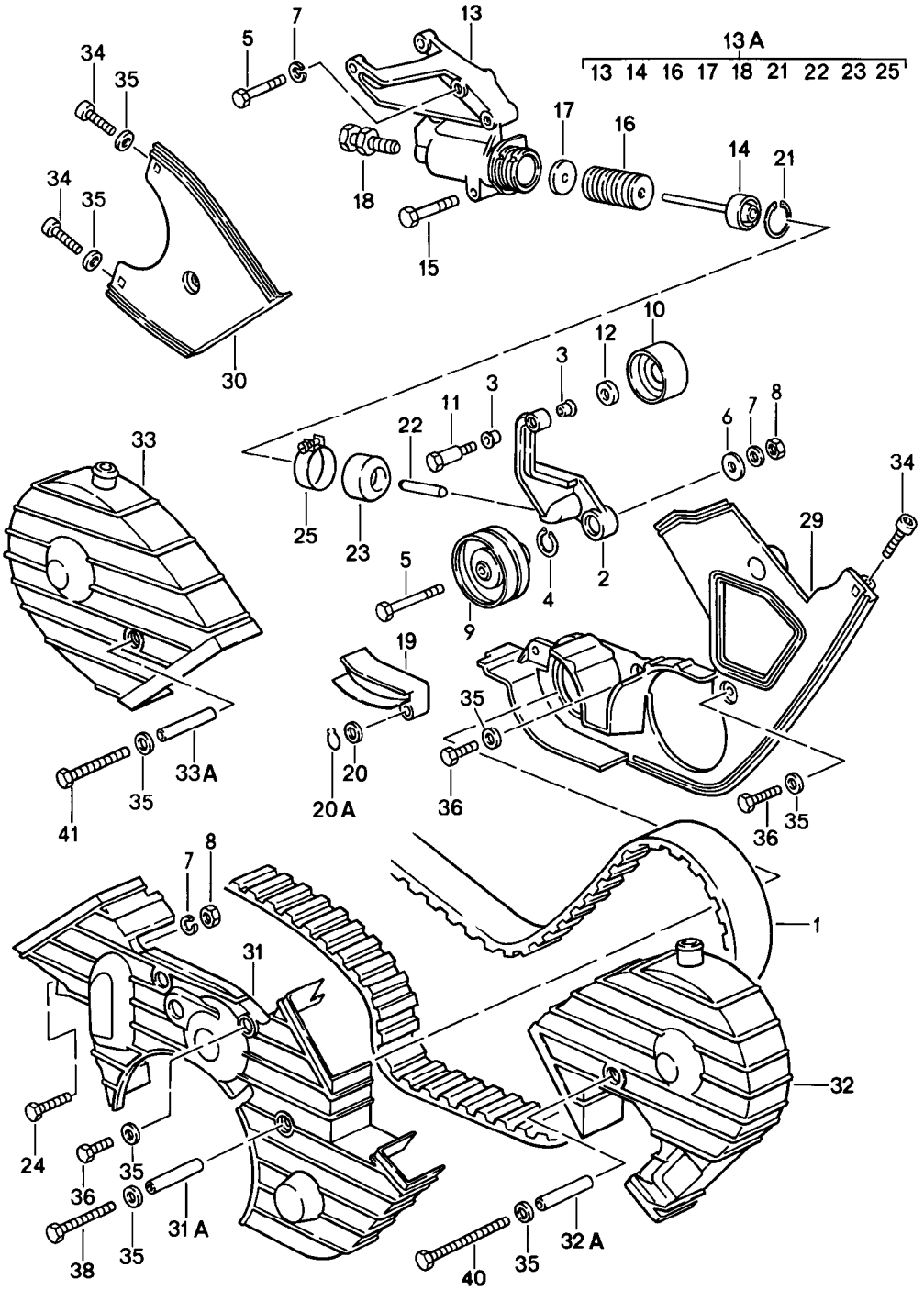

Model	Year	MG	SG	Illustration	Restrictions	UPD	7:00	27.10.2023
928	1978	1	03	103-010		738		

Pos	Part Number	Description	Remark	Qty	Model
		Camshaft toothed belt			
-		See technical information GRP. 1NR. 13/17			
1	928 105 157 00	toothed belt		1	
2	928 105 540 03	bracket for tensioning roller		1	
2	928 105 489 00	bracket for tensioning roller		1	2843, 2844 2845, 2846
3	999 924 002 40	bush D >> - MJ 1981		2	
3	999 924 003 40	bush D - MJ 1982>> - MJ 1982		2	
4	N 042 364 1	Securing ring 20 X 1,75		1	
5	900 074 139 02	Hexagon bolt M 8 X 55		3	
5	900 074 139 03	Hexagon bolt M 8 X 55		3	
6	999 025 068 07	Washer		1	
7	N 012 241 8	Spring washer		5	
7	900 025 007 02	Washer Discontinued part		1	
7	900 025 007 03	Washer		1	
8	900 076 025 02	Hexagon nut Discontinued part		1	
8	900 076 064 02	Hexagon nut		1	
9	928 105 512 05	Tensioning roller		1	
10	928 105 571 00	track roller		1	
11	928 105 570 00	Bearing screw D >> - MJ 1981		1	
11	928 105 570 03	bearing pin D - MJ 1982>> - MJ 1982		1	
12	928 105 572 00	Washer		1	
13	928 105 066 02	Belt tensioner damper only in conj. with: See item:	 928 105 489 00 2	1 1	2843, 2844 2845, 2846
13A	928 105 046 04	Belt tensioner damper (complete) Discontinued part		1	

Model	Year	MG	SG	Illustration	Restrictions	UPD	7:00	27.10.2023
928	1978	1	03	103-010		738		

Pos	Part Number	Description	Remark	Qty	Model
13A	928 105 046 06	Belt tensioner damper (complete) Discontinued part		1	
13A	928 105 036 02	Belt tensioner damper (complete) only in conj. with: See item:	928 105 489 00 2	1	
15	900 074 135 02	Hexagon bolt M 8 X 62		1	
16	928 105 539 03	spring disc Discontinued part		35	
16	928 105 539 02	spring disc		35	
17	928 105 163 01	support washer		1	
18	928 105 075 02	adjusting screw		1	
19	928 105 567 01	slide rail		1	
20	900 234 003 02	fitted washer 8 X 14 X 1 Discontinued part		2	
20	900 234 003 01	fitted washer 8 X 14 X 1		2	
20A	N 012 408 2	Securing ring 8 X 0,8		2	
21	999 041 030 01	Securing ring		1	
22	928 105 551 00	push rod		1	
23	928 105 552 02	caster wheel Discontinued part		1	
23	928 105 552 09	caster wheel		1	
24	900 074 134 02	Hexagon bolt M 8 X 45		1	
25	999 512 322 02	Hose clamp S 44/9		1	
29	928 105 147 01	Cover Discontinued part		1	
29	928 105 147 03	Toothed belt guard		1	
30	928 105 148 00	Toothed belt guard		1	
31	928 105 144 01	Toothed belt guard	center	1	
31A	928 105 445 00	Spacer pipe 44,5 MM		1	
32	928 105 145 04	Toothed belt guard		1	

Model	Year	MG	SG	Illustration	Restrictions	UPD	7:00	27.10.2023
928	1978	1	03	103-010		738		

Pos	Part Number	Description	Remark	Qty	Model
32A	928 105 443 00	Spacer pipe 82,5 MM		1	
33	928 105 146 03	Toothed belt guard		1	
33A	928 105 444 00	Spacer pipe 57,5 MM		1	
34	900 067 008 02	Socket head bolt M 6 X 12 Discontinued part		3	
34	900 067 008 03	Socket head bolt M 6 X 12		3	
35	N 011 524 7	Washer A 6,4 Discontinued part		14	
35	N 011 524 27	Washer A 6,4		14	
36	900 075 014 02	Hexagon bolt M 6 X 18 Discontinued part		5	
36	900 075 014 03	Hexagon bolt M 6 X 18		5	
38	N 040 307 1	Hexagon bolt M 6 X 73		1	
39	900 223 003 02	Washer B 6,4		5	
40	900 074 262 02	Hexagon bolt M 6 X 98 Discontinued part		1	
40	900 074 262 0C	Hexagon bolt M 6 X 98		1	
41	900 074 164 02	Hexagon bolt M 6 X 70 Discontinued part		1	
41	900 074 164 03	Hexagon bolt M 6 X 70		1	

Model	Year	MG	SG	Illustration	Restrictions	UPD	7:00	27.10.2023
928	1978	1	04	104-000		738		

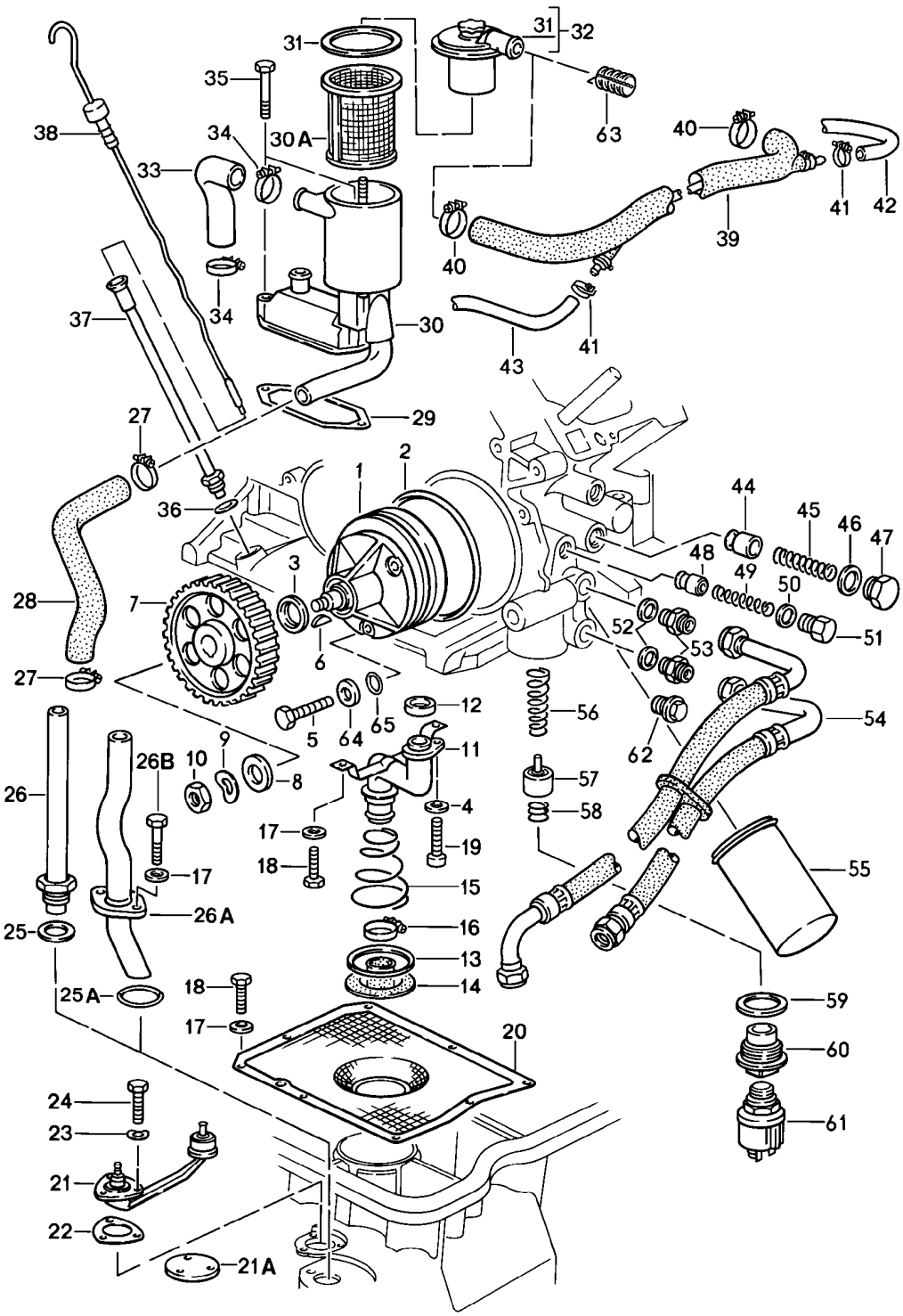

Model	Year	MG	SG	Illustration	Restrictions	UPD	7:00	27.10.2023
928	1978	1	04	104-000		738		

Pos	Part Number	Description	Remark	Qty	Model
		Engine (oil press./lubrica.)			
1	928 107 018 06	oil pump M >> 801 0292 M >> 801 5326 M >> 821 0657 M >> 821 5629		1	2801,2802, 2803,2804, 2809,2810, 2811,2812, 2815,2816, 2817,2818
1	928 107 018 07	oil pump M 801 0293 >> M 801 5327 >> M 821 0658 >> M 821 5630 >>		1	2809,2810, 2811,2812, 2815,2816, 2817,2818
2	999 701 633 40	O-ring 98 X 3		1	
3	999 113 275 40	Shaft oil seal		1	
4	900 025 007 02	Washer A 8,4 Discontinued part		1	
4	900 025 007 03	Washer A 8,4		1	
5	900 074 134 02	Hexagon bolt M 8 X 45		3	
6	N 012 713 1	woodruff key		1	
7	928 107 107 04	gear		1	
8	928 101 303 00	Washer		1	
9	N 012 242 3	Spring washer		1	
10	N 011 010 6	Hexagon nut Discontinued part		1	
10	N 101 552 10	Hexagon nut		1	
(11)	928 107 032 06	Intake manifold		1	
12	928 107 136 04	seal ring		1	
13	928 107 158 00	Thrust ring Conical spring		1	
14	928 107 137 05	Rubber sleeve		1	

Model	Year	MG	SG	Illustration	Restrictions	UPD	7:00	27.10.2023
928	1978	1	04	104-000		738		

Pos	Part Number	Description	Remark	Qty	Model
(14)	928 107 137 05	Rubber sleeve		1	2811,2812
15	928 107 159 01	Conical spring Intake manifold		1	
16	N 024 141 2	Hose clamp		1	
(16)	N 024 511 2	Hose clamp		1	2811,2812
17	N 011 524 7	Washer A 6,4 Discontinued part		12	
17	N 011 524 27	Washer A 6,4		12	
18	999 072 005 09	Hexagon nut M 6 X 12 Discontinued part		10	
18	999 072 005 01	Hexagon bolt M 6 X 12		10	
19	N 014 726 1	Socket head bolt with hexagon socket head M 8 X 30		1	
20	928 107 147 10	oil strainer		1	
21	928 606 301 02	oil level sender		1	
21A	928 101 203 00	Cover D - MJ 1980>>		1	
22	928 606 213 03	Seal		1	
23	N 012 222 4	Spring washer A 5		3	
24	N 010 207 6	Hexagon bolt M 5 X 12 Discontinued part		3	
24	N 010 207 17	Hexagon bolt M 5 X 12		3	
25	900 123 015 30	seal ring D >> - MJ 1979		1	
25A	928 107 169 01	Seal Discontinued part		1	
(25A)	928 107 169 01	Seal (asbestos free)		1	
26	928 107 039 01	oil pipe M >> 818 1659 M >> 818 9281 D >> - MJ 1979		1	

Model	Year	MG	SG	Illustration	Restrictions	UPD	7:00	27.10.2023
928	1978	1	04	104-000		738		

Pos	Part Number	Description	Remark	Qty	Model
26A	928 107 167 01	oil pipe M 818 1660 >> M 818 9282 >>		1	
26B	N 010 217 9	Hexagon bolt M 6 X 20		2	
27	999 512 038 02	Hose clamp		2	
27	PCG 512 038 02	Hose clamp Discontinued part		2	
28	928 107 311 01	Connecting hose		1	
29	928 107 707 01	Seal		1	
30	928 107 071 01	oil separator		1	
30A	928 107 717 03	oil strainer		1	
31	928 107 711 00	Seal		1	
32	928 199 710 03	Cover		1	
33	928 107 315 00	Hose for oil separator		1	
33	928 107 315 01	Hose for oil separator		1	
34	999 512 038 02	Hose clamp Discontinued part		2	
34	PCG 512 038 02	Hose clamp		2	
34	999 512 038 02	Hose clamp		2	
35	900 075 343 02	Hexagon bolt M 6 X 45 Z2		2	
36	900 123 007 30	seal ring		1	
37	928 107 020 00	guide tube		1	
38	928 107 737 07	Oil dipstick Discontinued part		1	
38	928 107 737 07	Oil dipstick		1	
39	928 107 073 00	Breather line D >> - MJ 1979		1	
(39)	928 107 722 00	Vent hose D - MJ 1980>>		1	
40	999 512 044 02	Hose clamp		2	
41	999 512 255 02	Hose clamp		2	

Model	Year	MG	SG	Illustration	Restrictions	UPD	7:00	27.10.2023
928	1978	1	04	104-000		738		

Pos	Part Number	Description	Remark	Qty	Model
-	999 181 709 50	Hose		*	
42		shorten to:	230 MM	1	
43		shorten to:	450 MM	1	
44	928 107 182 00	piston D >> - MJ 1978		1	
44	928 107 182 00	piston D - MJ 1979>>		1	
45	928 107 183 01	Pressure spring D >> - MJ 1978		1	
45	928 107 183 01	Pressure spring D - MJ 1979>>		1	
46	900 123 060 30	seal ring		1	
47	928 107 181 01	sealing plug		1	
(48)	928 107 081 00	piston with: sealing tape		1	
49	928 107 176 02	Pressure spring		1	
50	900 123 140 30	seal ring		1	
51	928 107 180 01	sealing plug		1	
52	900 123 118 30	seal ring		2	
53	900 915 003 02	Screwed socket		2	
54	928 107 037 05	Oil hose D >> - MJ 1978		1	
54	928 107 037 05	Oil hose D - MJ 1979>>		1	
55	928 107 201 05	oil filter Discontinued part		1	
55	928 107 201 07	oil filter red		1	
		also use:	PCG04321000	X	
			PCG04321020	X	
			PCG04320015	1	
		Repair set for maintenance see illustration:	198-000		
		engine oil see illustration:	198-005		
56	928 107 171 01	Pressure spring		1	
57	928 107 172 02	regulating valve		1	
58	928 107 173 00	Pressure spring		1	

Model	Year	MG	SG	Illustration	Restrictions	UPD	7:00	27.10.2023
928	1978	1	04	104-000		738		

Pos	Part Number	Description	Remark	Qty	Model
59	900 123 143 70	seal ring		1	
60	928 107 174 07	sealing plug Discontinued part		1	
60	928 107 174 07	sealing plug		1	
61	928 606 203 01	Oil pressure sender Discontinued part		1	
61	928 606 203 04	Oil pressure sender		1	
63	928 107 729 00	flame protection D - MJ 1980>>		1	
64	928 107 165 00	Washer		3	
65	999 701 006 40	O-ring		3	

Model	Year	MG	SG	Illustration	Restrictions	UPD	7:00	27.10.2023
928	1978	1	05	105-000		738		

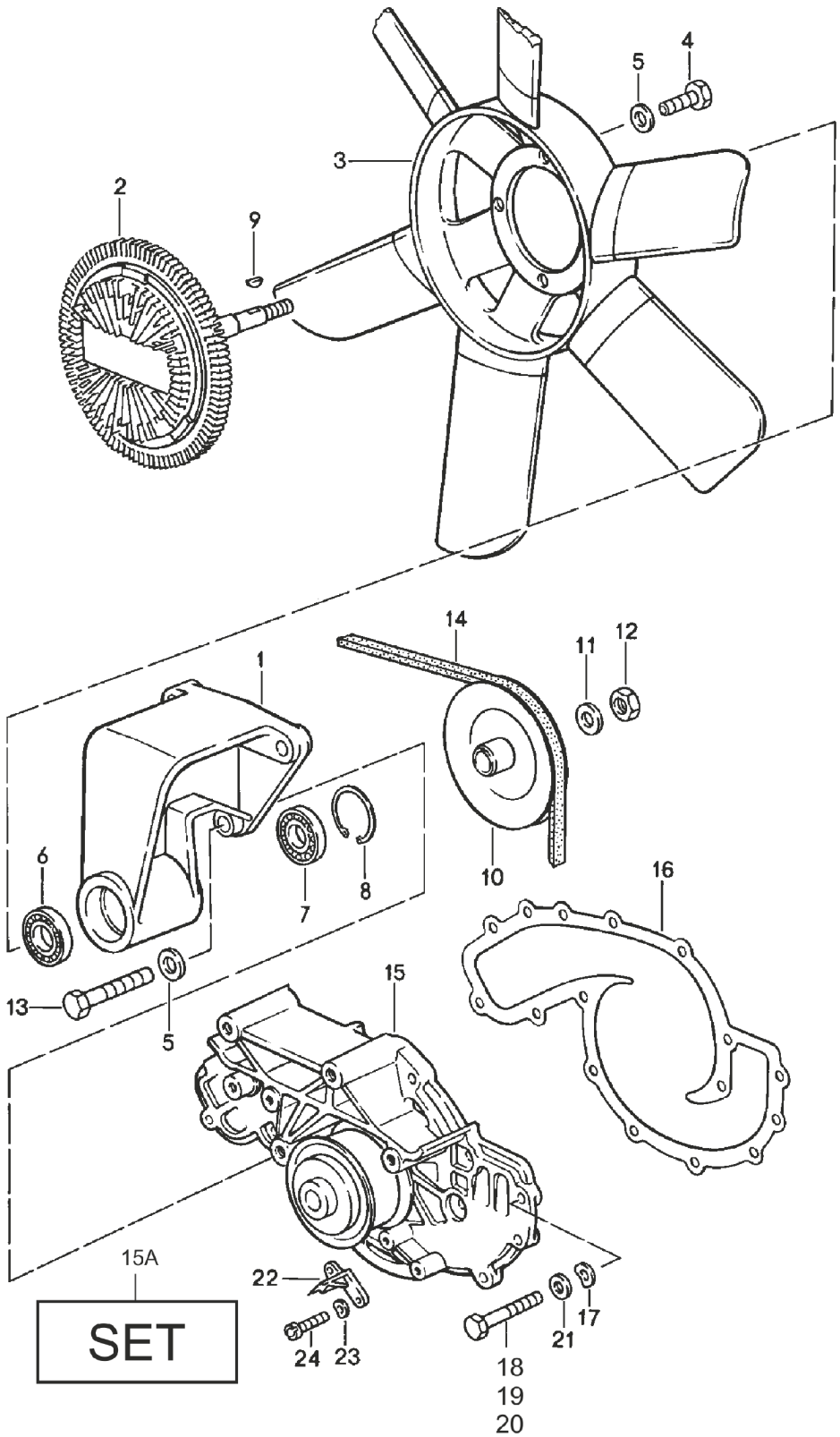

Model	Year	MG	SG	Illustration	Restrictions	UPD	7:00	27.10.2023
928	1978	1	05	105-000		738		

Pos	Part Number	Description	Remark	Qty	Model
		fan wheel Coolant pump			
1	928 106 110 00	Support for fan wheel D >> - MJ 1980 Discontinued part		1	
1	928 106 110 04	Support for fan wheel Discontinued part		1	
2	928 106 112 05	viscous coupling also use: 928.106.445.00		1	
3	928 106 137 01	fan wheel		1	
4	900 075 087 02	Hexagon bolt M 8 X 16 Discontinued part		4	
4	900 075 087 03	Hexagon bolt M 8 X 16		4	
4	900 075 087 04	Hexagon bolt M 8 X 16	M8X16 yellow	4	
5	N 011 525 13	Washer		7	
6	928 102 111 02	grooved ball bearing also use: 928.106.112.02 D >> - MJ 1980		1	
6	928 106 445 02	grooved ball bearing also use: 928.106.112.03 D - MJ 1981>>		1	
7	928 106 441 05	grooved ball bearing		1	
8	900 042 026 01	Securing ring 37 X 1,5		1	
9	900 118 005 00	woodruff key		1	
9	N 012 708 2	woodruff key		1	
10	928 106 113 02	pulley D >> - MJ 1978		1	
10	928 106 113 02	pulley D - MJ 1979>>		1	
11	N 012 242 3	Spring washer		1	
11	900 025 008 09	Washer Discontinued part		1	

Model	Year	MG	SG	Illustration	Restrictions	UPD	7:00	27.10.2023
928	1978	1	05	105-000		738		

Pos	Part Number	Description	Remark	Qty	Model
11	900 025 008 04	Washer		1	
11	900 025 008 0E	Washer	yellow	1	
12	N 011 010 6	Hexagon nut Discontinued part		1	
12	N 101 552 10	Hexagon nut		1	
13	N 010 335 5	Hexagon bolt M 8 X 35		3	
13	900 075 032 03	Hexagon bolt M 8 X 35		3	
14	999 192 117 50	v-belt 12,5 X 1050 MM D >> - MJ 1978	narrow	1	
14	999 192 160 50	v-belt 12,5 X 1040 MM D - MJ 1979>>	narrow	1	
15	928 106 015 09	Coolant pump Discontinued part		1	
15	928 106 015 22	Coolant pump		1	
15A	PCG 106 015 22	repair set for Coolant pump comprising:		1	
-	928 106 134 06	Seal		1	
-	928 105 176 01	Dead centre indicator		1	
-	900 976 010 01	Socket head bolt M 5 X 18		2	
-	900 025 080 01	Washer A 5,3		2	
-	900 378 030 01	Hexagon bolt	M6X20	5	
-	N 011 524 27	Washer	6,4X12,5X1,6	1	
-	900 378 013 01	Hexagon bolt	AM6X25	8	
-	N 040 307 1	Hexagon bolt M 6 X 73		1	
-	900 025 007 03	Washer	A8,4	3	
-	900 075 032 03	Hexagon bolt	M8X35	3	
(15)	928 106 015 AX	Coolant pump		1	
(15)	928 106 915 AX	Coolant pump comprising:		1	

Model	Year	MG	SG	Illustration	Restrictions	UPD	7:00	27.10.2023
928	1978	1	05	105-000		738		

Pos	Part Number	Description	Remark	Qty	Model
-	928 106 134 05	Seal Discontinued part		1	
-	928 106 134 06	Seal		1	
-	N 011 524 7	Washer Discontinued part		7	
-	N 011 524 27	Washer		7	
-	900 075 015 02	Hexagon bolt		5	
-	900 075 341 02	Bolt with washer Discontinued part		8	
-	900 075 341 01	Bolt with washer		8	
-	N 040 307 1	Hexagon bolt		1	
-	928 105 176 01	Dead centre indicator		1	
-	N 011 523 7	Washer		2	
-	900 014 066 02	Socket head bolt Discontinued part		2	
-	900 976 010 01	Socket head bolt		2	
-	928 106 015 AX	Coolant pump ----------		1	
16	928 106 134 03	Seal		1	
16	928 106 134 05	Seal (asbestos free) Discontinued part		1	
16	928 106 134 06	Seal (asbestos free)		1	
17	N 011 524 7	Washer Discontinued part		6	
17	N 011 524 27	Washer		6	
18	N 010 217 9	Hexagon bolt M 6 X 20		5	
19	900 075 333 02	Bolt with washer M 6 X 25 Z2 Discontinued part		8	
19	900 075 333 01	Bolt with washer M 6 X 25 Z2		8	
20	N 040 307 1	Hexagon bolt M 6 X 72		1	
21	900 025 014 02	Washer		1	

Model	Year	MG	SG	Illustration	Restrictions	UPD	7:00	27.10.2023
928	1978	1	05	105-000		738		

Pos	Part Number	Description	Remark	Qty	Model
22	928 105 176 01	Dead centre indicator Discontinued part		1	
23	N 011 523 9	Washer A 5,3		2	
24	900 014 066 02	Socket head bolt M 5 X 18 Discontinued part		2	
24	900 976 010 01	Socket head bolt M 5 X 18		2	

Model	Year	MG	SG	Illustration	Restrictions	UPD	7:00	27.10.2023
928	1978	1	05	105-005		738		

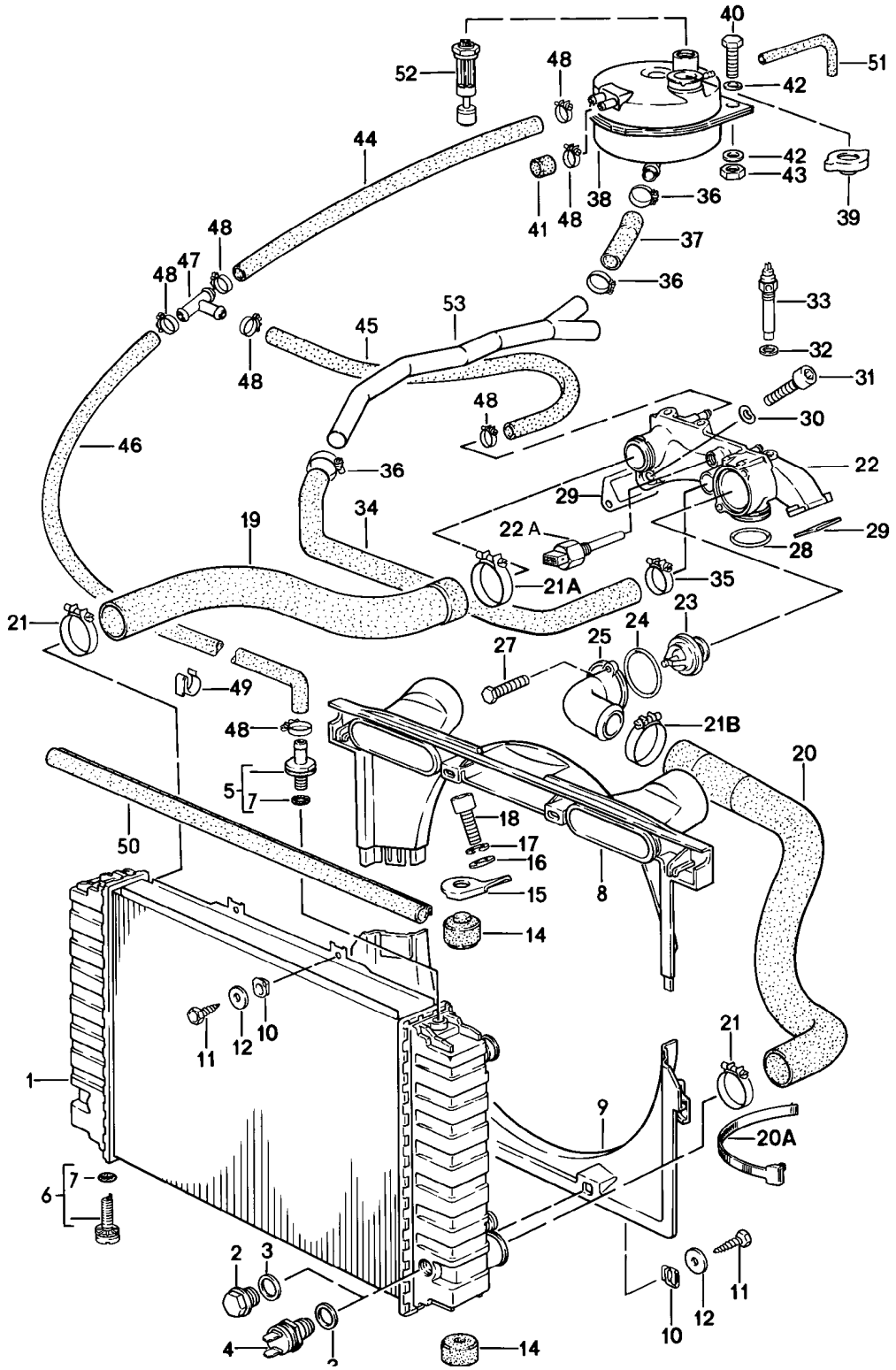

Model	Year	MG	SG	Illustration	Restrictions	UPD	7:00	27.10.2023
928	1978	1	05	105-005		738		

Pos	Part Number	Description	Remark	Qty	Model
		Coolant cooling system			
1	928 106 040 02	Cooler for coolant Discontinued part		1	2801,2809, 2811
1	928 106 040 02	Cooler for coolant		1	2801,2809, 2811
(1)	928 106 040 02	Cooler for coolant Engine Gearbox Oil cooler Discontinued part		1	2802,2810, 2812
(1)	928 106 040 02	Cooler for coolant Engine Gearbox Oil cooler		1 1	2802,2810, 2812
2	N 016 163 2	sealing plug CM 22 X 1,5 Discontinued part		1	
2	900 124 020 01	sealing plug CM 22 X 1,5		1	
3	900 123 149 70	seal ring		1	
4	823 959 481 F	thermal switch		1	PR:573
5	928 106 443 02	ventilation union		1	
6	928 106 444 01	drain plug		1	
7	999 701 651 40	O-ring 7,65 X 1,78		X	
8	928 106 063 00	Air guide Upper part		1	
9	928 106 262 02	Air guide Lower part		1	
10	999 591 571 02	panel nut		4	
11	900 187 015 02	hexagon head panel screw		4	
12	N 011 612 3	Washer Discontinued part		4	
12	N 011 612 C	Washer		4	
14	928 106 177 01	Rubber bush		4	
15	928 106 178 01	Bracket		2	
16	900 151 008 02	Washer		2	
17	N 012 241 8	Spring washer		2	

Model	Year	MG	SG	Illustration	Restrictions	UPD	7:00	27.10.2023
928	1978	1	05	105-005		738		

Pos	Part Number	Description	Remark	Qty	Model
18	900 119 052 02	Socket head bolt M 8 X 16		2	
19	928 106 238 06	Hose		1	
20	928 106 239 08	Hose		1	
20A	999 513 010 40	Cable ties		1	
21	999 512 330 02	Hose clamp Discontinued part		2	
21	PCG 512 330 02	Hose clamp		2	
21A	999 512 331 02	Hose clamp		1	
21B	999 512 334 02	Hose clamp Discontinued part		1	
21B	PCG 512 334 02	Hose clamp		1	
22	928 106 016 03	Coolant regulator housing D >> - MJ 1979 Discontinued part		1	
(22)	928 106 016 11	Coolant regulator housing D >> - MJ 1979		1	
(22)	928 106 016 05	Coolant regulator housing Discontinued part		1	2809,2810, 2811,2812
(22)	928 106 016 12	Coolant regulator housing		1	2809,2810, 2811,2812
22A	928 605 101 00	Thermal timing switch Discontinued part		1	
22A	928 605 101 02	Thermal timing switch		1	
23	928 106 129 16	thermostat Discontinued part		1	
23	928 106 129 17	thermostat		1	
24	999 701 632 40	O-ring		1	
25	928 106 173 02	Cover for Coolant regulator housing		1	
27	900 075 333 02	Bolt with washer M 6 X 25 Z2 Discontinued part		2	
27	900 075 333 01	Bolt with washer M 6 X 25 Z2		2	
28	999 701 627 40	O-ring OR 53 X 7		1	

Model	Year	MG	SG	Illustration	Restrictions	UPD	7:00	27.10.2023
928	1978	1	05	105-005		738		

Pos	Part Number	Description	Remark	Qty	Model
29	928 106 197 00	Seal Discontinued part		2	
29	928 106 197 01	Seal Discontinued part		2	
29	928 106 197 04	Seal		2	
(29)	928 106 197 03	Seal		2	
30	900 025 007 02	Washer Discontinued part		4	
30	900 025 007 03	Washer		4	
31	N 014 726 1	Socket head bolt with hexagon socket head M 8 X 30		4	
32	900 123 007 30	seal ring		1	
33	928 606 201 01	Coolant temperature sender		1	
34	928 106 321 00	Hose Discontinued part		1	
34	928 106 321 03	Hose Discontinued part		1	
34	928 106 321 05	Hose		1	
(34)	927 106 321 01	Hose	rhd	1	
35	999 512 300 02	Hose clamp SR 33/98		1	
36	999 512 374 02	Hose clamp LB 20-32		3	
37	928 106 323 01	Hose Discontinued part		1	
37	928 106 323 01	Hose		1	
38	928 106 256 03	Reservoir	lhd	1	
(38)	928 106 256 03	Reservoir	lhd	1	
(38)	927 106 256 01	Reservoir	rhd	1	
39	928 106 257 03	catch		1	
40	900 075 057 02	Hexagon bolt M 6 X 16		2	
40	900 075 057 03	Hexagon bolt M 6 X 16 No longer use the part here		2	
41	930 110 256 02	Cap closure		1	

Model	Year	MG	SG	Illustration	Restrictions	UPD	7:00	27.10.2023
928	1978	1	05	105-005		738		

Pos	Part Number	Description	Remark	Qty	Model
42	N 011 524 7	Washer Discontinued part		4	
42	N 011 524 27	Washer		4	
43	900 076 010 02	Nut Discontinued part		1	
43	900 076 010 0B	Nut		1	
43	900 076 010 03	Nut		1	
-	999 181 709 50	Hose		*	
44		shorten to:	330 MM	1	
(44)		shorten to:	270 MM	1	
45		shorten to:	380 MM	1	
(45)		shorten to:	830 MM	1	
(45)		shorten to:	630 MM	1	
46	928 106 277 00	Hose	lhd	1	
(46)	927 106 277 00	Hose	rhd	1	
47	999 137 001 40	t-piece		1	
48	999 512 255 02	Hose clamp SM 13/9		6	
49	999 651 165 02	Cable fastener		3	
50	928 106 271 02	sealing tape Discontinued part		1	
50	928 106 271 03	sealing tape		1	
51	928 106 425 00	Pressure hose 350 MM		1	
52	928 641 503 01	Water level switch For vehicles with water level indicator		1	
53		See main group 8 8/13/10 - 5			
54	N 024 509 2	Hose clamp LA 12 - 20		1	

Model	Year	MG	SG	Illustration	Restrictions	UPD	7:01	27.10.2023
928	1978	1	06	106-000		738		

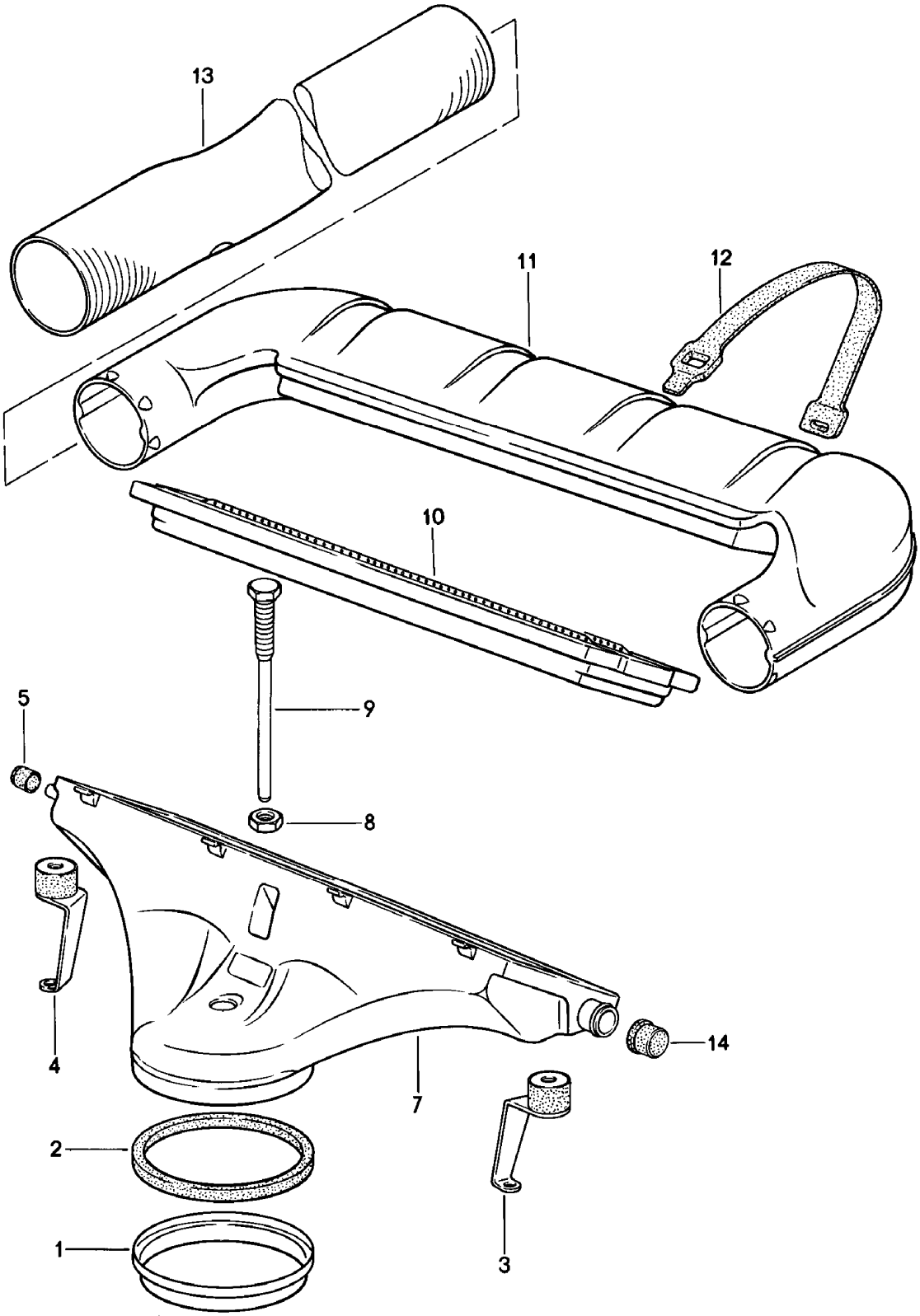

Model	Year	MG	SG	Illustration	Restrictions	UPD	7:01	27.10.2023
928	1978	1	06	106-000		738		

Pos	Part Number	Description	Remark	Qty	Model
		Air filter			
1	928 110 141 01	Thrust ring		1	
2	930 110 122 00	seal ring		1	
3	928 110 043 00	Bracket	left	1	
4	928 110 044 00	Bracket	right	1	
5	930 110 256 00	Sealing cap		1	
6	928 110 421 00	flame protection		1	
7	928 110 229 00	Air filter Lower part		1	
8	N 011 118 11	Hexagon nut Discontinued part		1	
8	900 034 001 05	Hexagon nut		1	
9	928 110 142 00	Screw		1	
10	928 110 185 01	Air filter element Repair set for maintenance see illustration:	 198-000	1	
11	928 110 916 00	Air filter Upper part		1	
12	928 110 363 01	tensioning strap		4	
12	928 110 363 01	tensioning strap		4	
13	928 110 272 04	intake hose D >> - MJ 1980		2	
(13)	928 110 272 04	intake hose D - MJ 1981>>		2	
14	928 110 293 00	Cap closure		1	

Model	Year	MG	SG	Illustration	Restrictions	UPD	7:01	27.10.2023
928	1978	1	07	107-000		738		

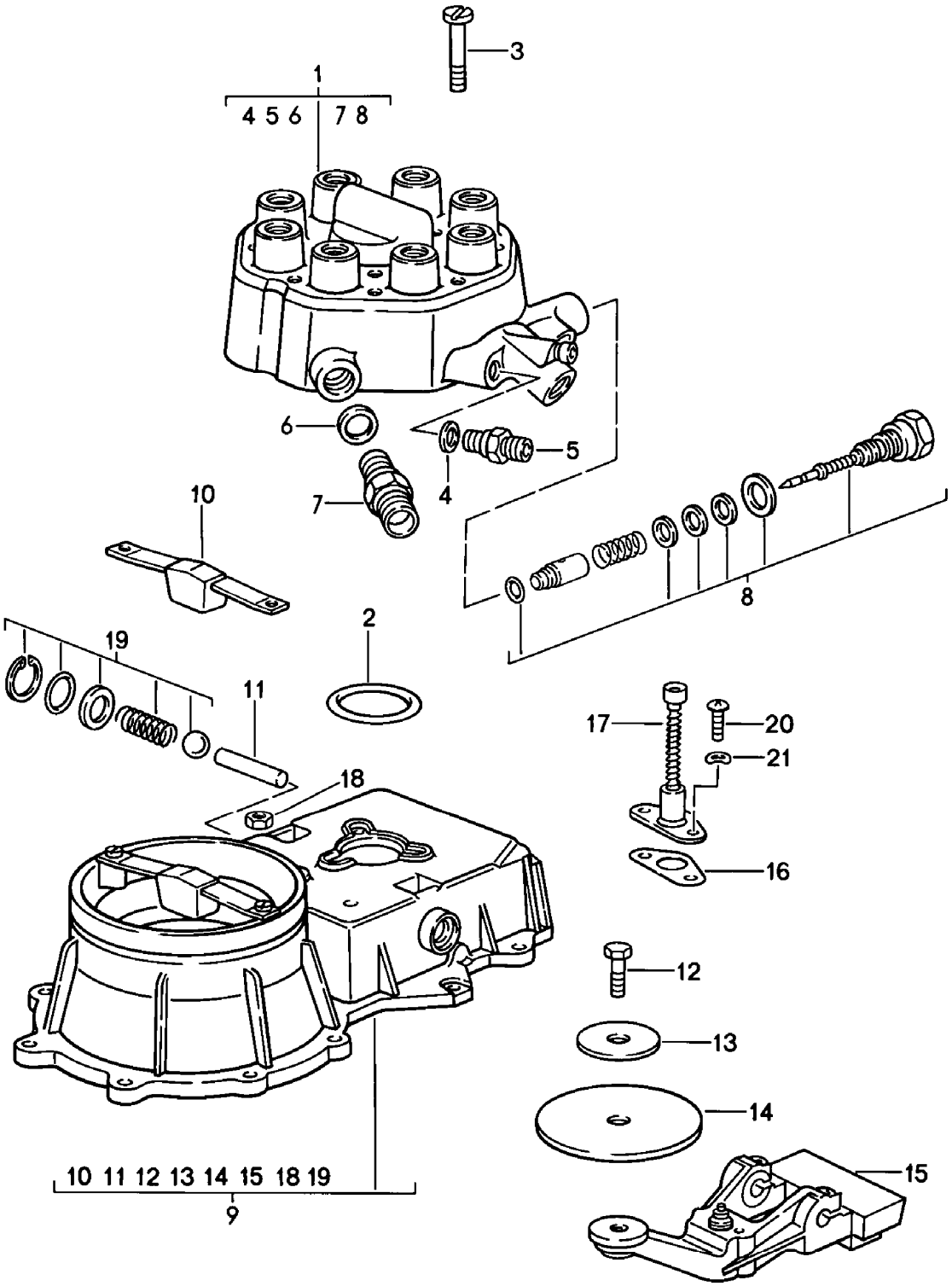

Model	Year	MG	SG	Illustration	Restrictions	UPD	7:01	27.10.2023
928	1978	1	07	107-000		738		

Pos	Part Number	Description	Remark	Qty	Model
		K-jetronic 1 Mixture controller			
1	928 110 906 00	fuel metering valve		1	
2	911 110 936 01	Seal		1	
3	900 146 045 02	fillister hd. bolt BM 5 X 45		3	
4	N 013 830 7	seal ring A 8 X 12		3	
5	928 110 921 00	threaded union D >> - MJ 1979 Discontinued part		3	
5	928 110 223 03	threaded union D >> - MJ 1981		2	
5	928 110 223 03	threaded union D - MJ 1982>> - MJ 1982		2	
6	900 123 055 20	seal ring		1	
7	928 110 922 00	threaded union		1	
8	928 110 920 01	Installation kit mixture control screw See workshop manual KD-NR. 256155		1	
9	928 110 905 00	air flow meter D >> - MJ 1981 Discontinued part		1	
9	928 110 905 X	air flow meter		1	
(9)	928 110 905 02	air flow meter with: fuel consumption gauge D - MJ 1982>> - MJ 1982 Discontinued part		1	
(9)	928 110 905 BX	air flow meter with: fuel consumption gauge D - MJ 1982>>		1	
10	928 110 924 00	Stop		1	
11	911 110 941 01	Cylinder pin		1	
12	911 110 944 01	Hexagon bolt		1	
13	911 110 960 00	support washer		1	
14	911 110 943 01	Baffle plate Discontinued part		1	

Model	Year	MG	SG	Illustration	Restrictions	UPD	7:01	27.10.2023
928	1978	1	07	107-000		738		

Pos	Part Number	Description	Remark	Qty	Model
14	911 110 943 03	Baffle plate		1	
15	928 110 923 00	retaining lever		1	
16	928 110 925 00	Seal Discontinued part		1	
16	930 110 911 00	Seal		1	
17	928 110 926 00	T-bar key		1	
18	911 110 945 00	Locknut		1	
19	911 110 946 00	Installation kit for retaining lever Cylinder pin		1	
20	N 014 128 13	fillister hd. bolt		2	
21	N 012 005 3	spring ring B 5		2	

Model	Year	MG	SG	Illustration	Restrictions	UPD	7:01	27.10.2023
928	1978	1	07	107-005		738		

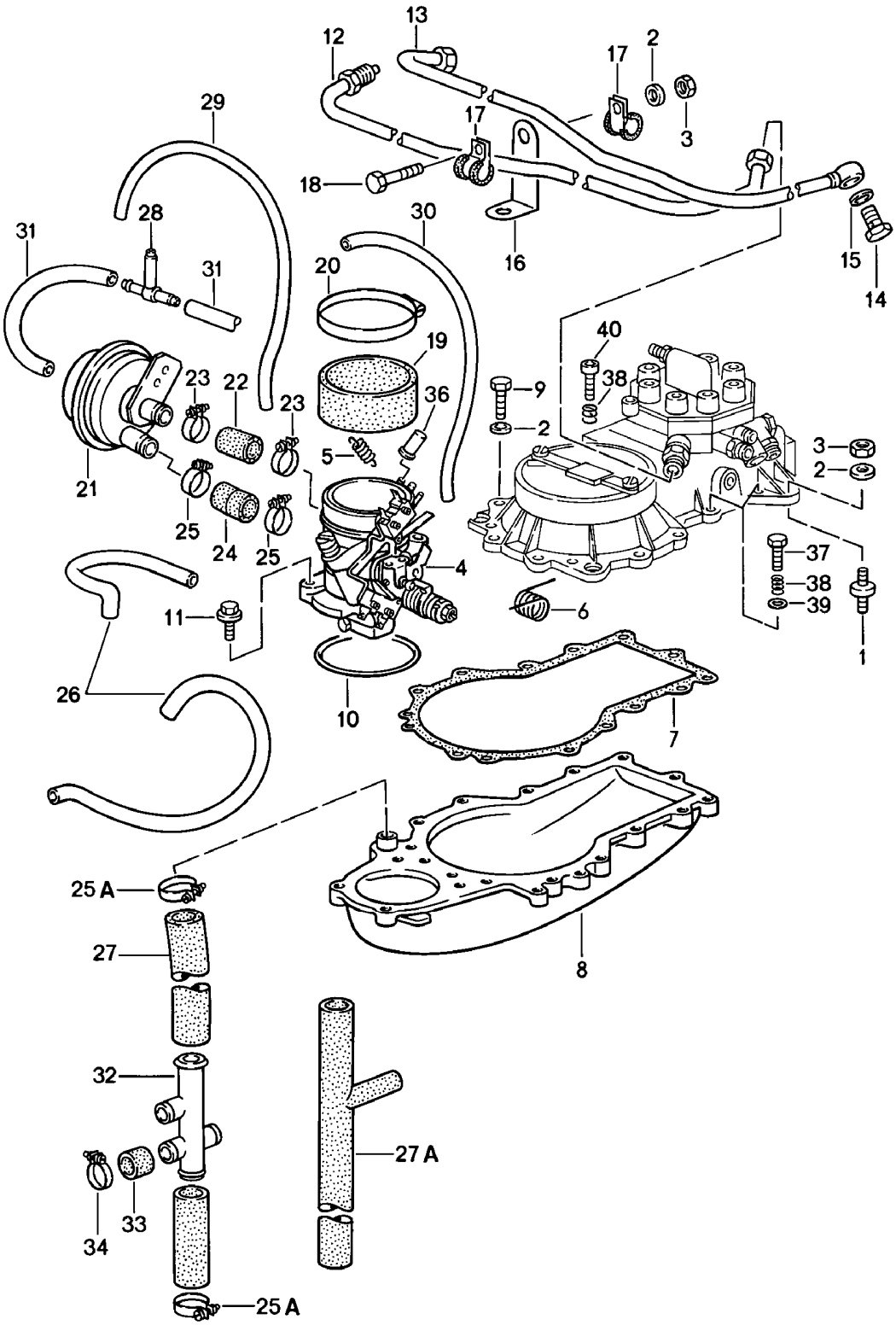

Model	Year	MG	SG	Illustration	Restrictions	UPD	7:01	27.10.2023
928	1978	1	07	107-005		738		

Pos	Part Number	Description	Remark	Qty	Model
		K-jetronic 2			
1	928 110 191 00	Bonded rubber bush		4	
1	999 703 261 00	Bonded rubber bush		4	
2	N 011 524 7	Washer Discontinued part		16	
2	N 011 524 27	Washer		16	
3	900 076 010 02	Nut Discontinued part		6	
3	900 076 010 0B	Nut		6	
3	900 076 010 03	Nut		6	
4	928 110 090 08	throttle valve adapter		1	2801,2802, 2809,2810
4	928 110 099 01	throttle valve adapter		1	2811,2812
5	928 110 425 00	tension spring		1	
6	928 110 427 00	torsion spring		1	
7	930 110 394 00	Seal		1	
8	928 110 097 03	Air guide housing		1	2801,2802
8	928 110 097 04	Air guide housing		1	2809,2810
8	928 110 097 05	Air guide housing		1	2811,2812
9	N 010 217 9	Hexagon bolt M 6 X 20		11	
10	999 701 436 40	O-ring 91 X 4		1	
11	900 075 333 02	Bolt with washer M 6 X 25 Z2 Discontinued part		4	
11	900 075 333 01	Bolt with washer M 6 X 25 Z2		4	
12	928 110 501 00	Fuel line F >> 92-A0800 878 F >> 92-A0820 538	feed	1	
12	928 110 501 02	Fuel line F 92-A0800 879>> F 92-A0820 539>>		1	
13	928 110 502 00	Fuel line F >> 92-A0800 878 F >> 92-A0820 538	return	1	

Model	Year	MG	SG	Illustration	Restrictions	UPD	7:01	27.10.2023
928	1978	1	07	107-005		738		

Pos	Part Number	Description	Remark	Qty	Model
(13)	928 110 502 02	Fuel line F 92-A0800 879>> F 92-A0820 539>>	return	1	
14	900 175 020 02	Banjo bolt Discontinued part		1	
14	900 175 020 01	Banjo bolt		1	
15	900 123 005 20	seal ring		2	
16	928 110 287 00	angle for Fuel line		1	
17	999 511 116 02	Clamp Discontinued part		4	
17	999 511 116 03	Clamp		4	
18	900 075 014 02	Hexagon bolt M 6 X 18 Discontinued part		2	
18	900 075 014 03	Hexagon bolt M 6 X 18		2	
19	928 110 248 01	Connecting piece		1	2801,2802, 2809,2810
(19)	928 110 243 00	Connecting piece		1	2811,2812
20	999 512 226 02	Hose clamp	/10	2	2801,2802, 2809,2810
(20)	999 512 087 02	Hose clamp Discontinued part		2	2811,2812
(20)	PCG 512 087 02	Hose clamp		2	2811,2812
21	930 110 173 00	Vacuum limiter D - MJ 1980>>		1	2811,2812
(21)	930 110 173 00	Vacuum limiter D - MJ 1980>>		1	2809,2810 "S.."
(21)	930 110 173 00	Vacuum limiter D - MJ 1980>>		1	2809,2810 "AUS"
(21)	928 110 173 01	Vacuum limiter D - MJ 1980>>		1	2809,2810
22	928 110 175 00	Hose		1	
23	999 512 045 02	Hose clamp		2	
24	928 110 178 00	Hose		1	

Model	Year	MG	SG	Illustration	Restrictions	UPD	7:01	27.10.2023
928	1978	1	07	107-005		738		

Pos	Part Number	Description	Remark	Qty	Model
25	999 512 552 00	Hose clamp Discontinued part		2	
25	999 512 552 01	Hose clamp		2	
25A	999 512 038 02	Hose clamp		2	
25A	PCG 512 038 02	Hose clamp Discontinued part		2	
26	928 110 511 00	Vacuum hose warm-up valve throttle valve adapter Discontinued part		2	
26	928 110 511 02	Vacuum hose warm-up valve throttle valve adapter		2	
27	999 239 009 40	Hose Air guide housing Distributor D >> - MJ 1979		*	
27	999 239 009 40	Hose 340 MM D - MJ 1980>>		*	
27A	928 110 357 00	Hose Air guide housing Auxiliary air slide D - MJ 1980>> Discontinued part		1	
27A	928 110 357 01	Hose Air guide housing Auxiliary air slide D - MJ 1980>>		1	
28	930 110 271 01	t-piece		1	
29	999 239 003 40	Hose		*	
29		shorten to:	500 MM	1	
30		shorten to:	650 MM	1	
-	000 043 204 94	Hose		*	
31		shorten to:	150 MM	2	
32	928 110 439 00	Distributor D >> - MJ 1979		1	
33	930 110 256 00	Sealing cap		1	
34	999 512 056 02	Hose clamp		1	
35	999 239 009 40	Hose Distributor Auxiliary air slide		*	

Model	Year	MG	SG	Illustration	Restrictions	UPD	7:01	27.10.2023
928	1978	1	07	107-005		738		

Pos	Part Number	Description	Remark	Qty	Model
36	930 110 292 00	Sealing cap D - MJ 1980>>		1	"S..","AUS"
37	900 075 135 02	Hexagon bolt M 6 X 28		2	
38	911 110 364 00	Pressure spring		3	
39	900 031 011 02	Washer		2	
40	N 010 220 3	Hexagon bolt		1	

Model	Year	MG	SG	Illustration	Restrictions	UPD	7:01	27.10.2023
928	1978	1	07	107-010		738		

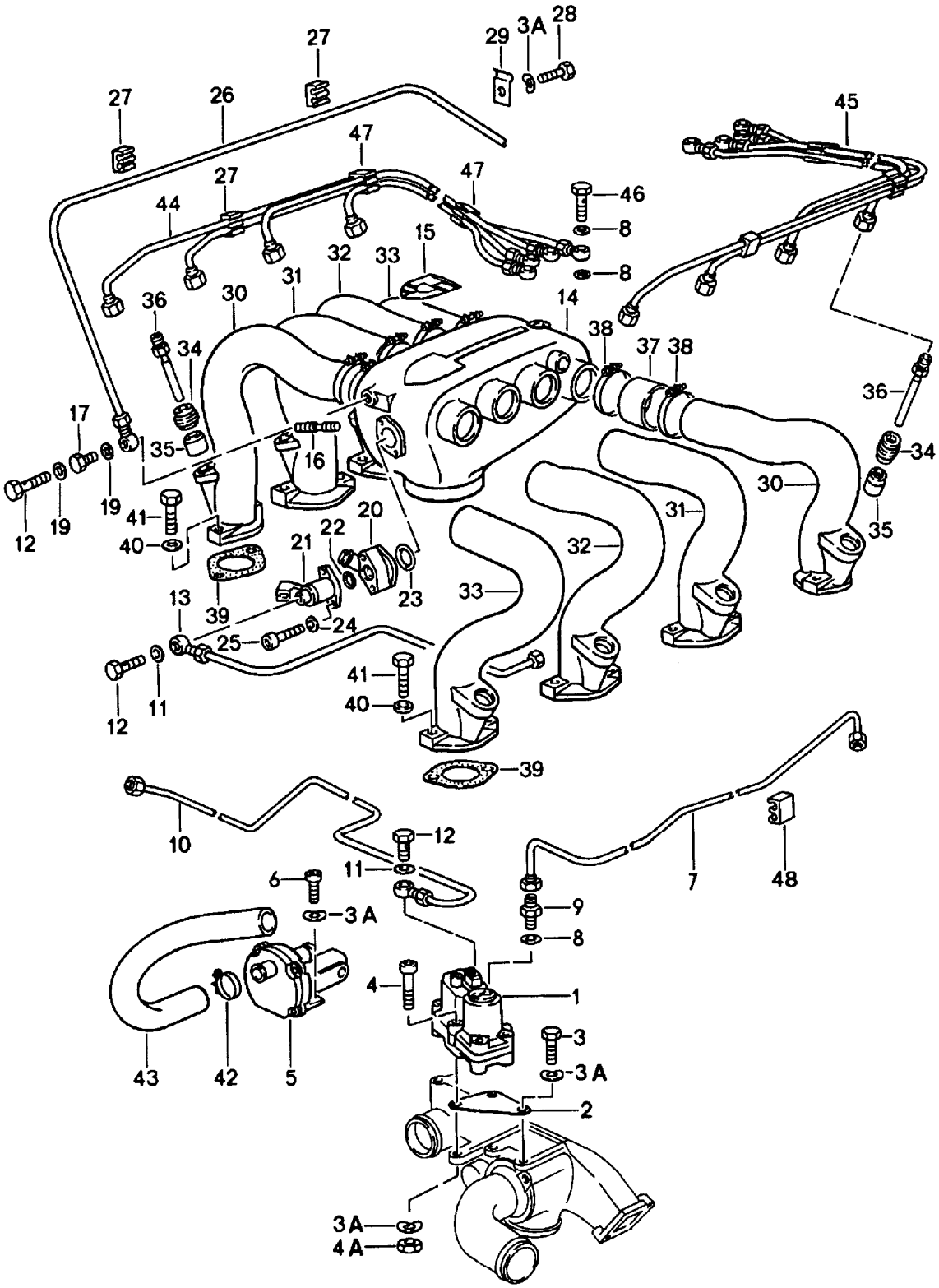

Model	Year	MG	SG	Illustration	Restrictions	UPD	7:01	27.10.2023
928	1978	1	07	107-010		738		

Pos	Part Number	Description	Remark	Qty	Model
		K-jetronic 3			
1	928 606 109 04	warm-up valve		1	2811,2812
1	928 606 109 DX	warm-up valve		1	2811,2812
(1)	928 606 109 05	warm-up valve		1	-04 2801
(1)	928 606 109 EX	warm-up valve		1	-04 2801,2809, 2810
2	928 110 239 00	Console D >> - MJ 1979		1	
3	999 072 005 09	Hexagon nut M 6 X 12 D >> - MJ 1979 Discontinued part		1	
3	999 072 005 01	Hexagon bolt M 6 X 12		1	
3A	N 011 524 7	Washer A 6,4 Discontinued part		7	
3A	N 011 524 27	Washer A 6,4		7	
4	N 014 719 2	Socket head bolt M 6 X 50		2	
4A	900 076 010 02	Nut D >> - MJ 1979 Discontinued part		3	
4A	900 076 010 0B	Nut D >> - MJ 1979		3	
4A	900 076 010 03	Nut		3	
5	930 606 102 00	Auxiliary air slide Discontinued part		1	
5	930 606 102 X	Auxiliary air slide		1	
6	N 014 703 2	Socket head bolt with hexagon socket head M 6 X 18 D >> - MJ 1979		2	

Model	Year	MG	SG	Illustration	Restrictions	UPD	7:01	27.10.2023
928	1978	1	07	107-010		738		

Pos	Part Number	Description	Remark	Qty	Model
7	928 110 189 05	Fuel line warm-up valve pressure regulator only in conj. with: fuel metering valve with: Protective sleeve Valve D >> - MJ 1979		1	
7	928 110 189 03	Fuel line D - MJ 1980>>		1	
7	928 110 189 04	Fuel line		1	2811,2812
8	900 123 144 30	seal ring A 10 X 13,5		17	
9	999 105 013 02	Screwed socket		1	
10	928 110 190 00	Fuel line warm-up valve D >> - MJ 1979	return	1	
(10)	928 110 190 01	Fuel line D - MJ 1980>>		1	
11	N 013 830 7	seal ring A 8 X 12		4	
12	911 110 899 00	Banjo bolt		3	
13	928 110 194 00	Fuel line cold start valve	feed	1	
14	928 110 056 02	intake air distributor		1	-10 2801
(14)	928 110 086 00	intake air distributor		1	2811,2812
15	928 110 403 00	Porsche crest		1	
17	900 083 047 02	Hexagon bolt M 8 X 1 X 10		1	
19	900 123 115 30	seal ring A 8 X 11,5		3	
20	911 110 264 00	Intermediate piece for cold start valve		1	
21	911 606 107 01	cold start valve D >> - MJ 1980		1	
21	911 606 107 01	cold start valve D - MJ 1981>>		1	
22	999 701 395 50	O-ring		1	

Model	Year	MG	SG	Illustration	Restrictions	UPD	7:01	27.10.2023
928	1978	1	07	107-010		738		

Pos	Part Number	Description	Remark	Qty	Model
23	999 701 210 40	O-ring Discontinued part		1	
23	999 701 210 4A	O-ring		1	
24	N 011 523 9	Washer		2	
25	900 067 150 02	Socket head bolt M 5 X 32		2	
26	928 110 087 01	Vacuum line	AUT.	1	
27	928 110 150 00	terminal	AUT.	4	
28	999 072 005 09	Hexagon nut M 6 X 12 Discontinued part	AUT.	1	
28	999 072 005 01	Hexagon bolt M 6 X 12	AUT.	1	
29	900 264 001 02	Clamp	AUT.	1	
30	928 110 281 02	Intake manifold	cylinder 1 and cylinder 8	2	-10 2801
(30)	928 110 295 00	Intake manifold	cylinder 1 and cylinder 8	2	2811,2812
31	928 110 282 03	Intake manifold	cylinder 2 and cylinder 7	2	-10 2801
(31)	928 110 296 00	Intake manifold	cylinder 2 and cylinder 7	2	2811,2812
32	928 110 283 02	Intake manifold	Cylinder 3,6	2	-10 2801
(32)	928 110 297 00	Intake manifold	Cylinder 3,6	2	2811,2812
33	928 110 284 02	Intake manifold	cylinders 4,5	2	-10 2801
(33)	928 110 298 00	Intake manifold	cylinders 4,5	2	2811,2812
34	928 110 399 02	Spring pin		8	
35	928 110 398 00	Sleeve for Injection valve		8	
36	928 110 225 00	Injection valve		8	
37	928 110 158 01	Rubber sleeve		8	-10 2801
(37)	928 110 241 00	Rubber sleeve		8	2811,2812

Model	Year	MG	SG	Illustration	Restrictions	UPD	7:01	27.10.2023
928	1978	1	07	107-010		738		

Pos	Part Number	Description	Remark	Qty	Model
38	999 512 085 02	Hose clamp S 52/9 D >> - MJ 1979		16	
38	999 512 348 02	Hose clamp D - MJ 1980>>		16	
39	928 110 330 03	Seal		8	
40	900 025 007 02	Washer Discontinued part		16	
40	900 025 007 03	Washer		16	
41	N 010 335 5	Hexagon bolt M 8 X 35		16	
41	900 075 032 03	Hexagon bolt M 8 X 35		16	
42	999 512 552 00	Hose clamp Discontinued part		2	-10 2801
42	999 512 552 01	Hose clamp		2	-10 2801
43	928 110 177 02	Hose Auxiliary air slide intake air distributor		1	-10 2801
44	928 110 028 00	Fuel line	right Cylinders 1-4	1	
45	928 110 027 00	Fuel line	left Cylinder 5-8	1	
46	930 110 547 00	Banjo bolt Discontinued part		8	
46	930 110 547 01	Banjo bolt		8	
47	928 110 149 00	terminal		4	
48	928 110 148 01	terminal		2	

Model	Year	MG	SG	Illustration	Restrictions	UPD	7:02	27.10.2023
928	1978	1	07	107-030		738		

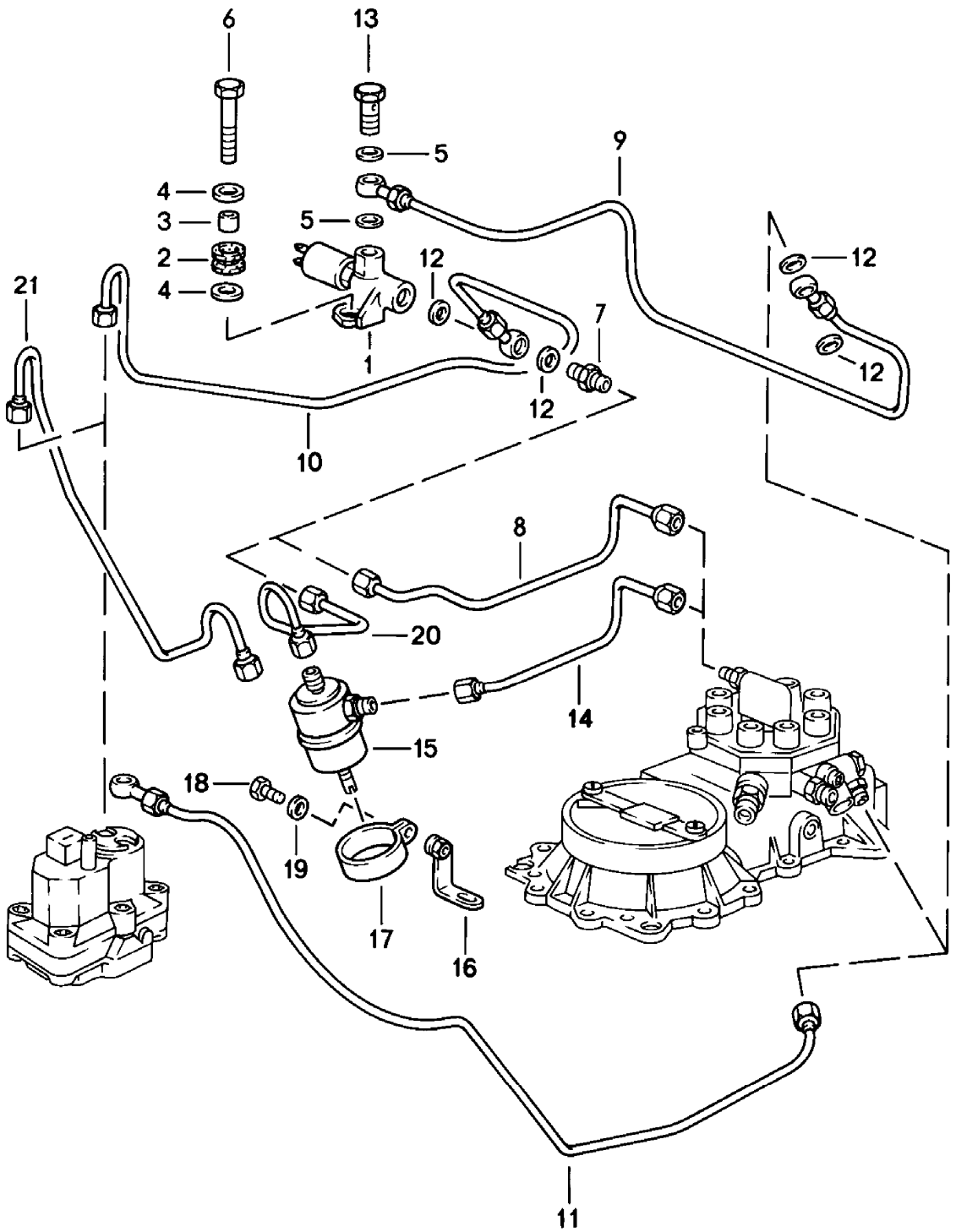

Model	Year	MG	SG	Illustration	Restrictions	UPD	7:02	27.10.2023
928	1978	1	07	107-030		738		

Pos	Part Number	Description	Remark	Qty	Model
		Fuel line Control line D - MJ 1980>>			
-		to use after: 18.02.80 M 800 0378 >> M 800 5496 >> M 820 0233 >> M 820 5025 >>			2809,2810, 2811,2812
-		For retrofitting See technical information GRP.2 NR.9			
1	928 605 103 00	Solenoid valve with: Distributor		1	
-	928 605 901 00	jet 65		1	
2	928 110 244 00	Rubber grommet		1	
3	928 110 245 00	spacer sleeve		1	
4	999 025 072 02	Washer		2	
5	N 013 830 7	seal ring		2	
6	900 074 040 02	Hexagon bolt		1	
7	900 176 001 02	connection piece		2	
8	928 110 235 00	Fuel line		1	
9	928 110 234 02	Fuel line D >> - MJ 1981		1	
9	928 110 234 02	Fuel line D - MJ 1982>> - MJ 1982		1	
10	928 110 189 04	Fuel line		1	
11	928 110 190 02	Fuel line		1	
12	900 123 115 30	seal ring A 8 X 11,5		4	
13	911 110 899 00	Banjo bolt		3	
14	928 110 505 01	Fuel line		1	
15	928 110 231 02	pressure regulator		1	
16	928 110 525 00	Bracket		1	
17	999 511 132 02	Clamp		1	

Model	Year	MG	SG	Illustration	Restrictions	UPD	7:02	27.10.2023
928	1978	1	07	107-030		738		

Pos	Part Number	Description	Remark	Qty	Model
18	999 072 005 09	Hexagon nut M 6 X 12 Discontinued part		1	
18	999 072 005 01	Hexagon bolt M 6 X 12		1	
19	N 011 524 7	Washer Discontinued part		1	
19	N 011 524 27	Washer		1	
20	928 110 503 00	Fuel line		1	
21	928 110 189 05	Fuel line		X	

Model	Year	MG	SG	Illustration	Restrictions	UPD	7:02	27.10.2023
928	1978	1	08	108-000		738		

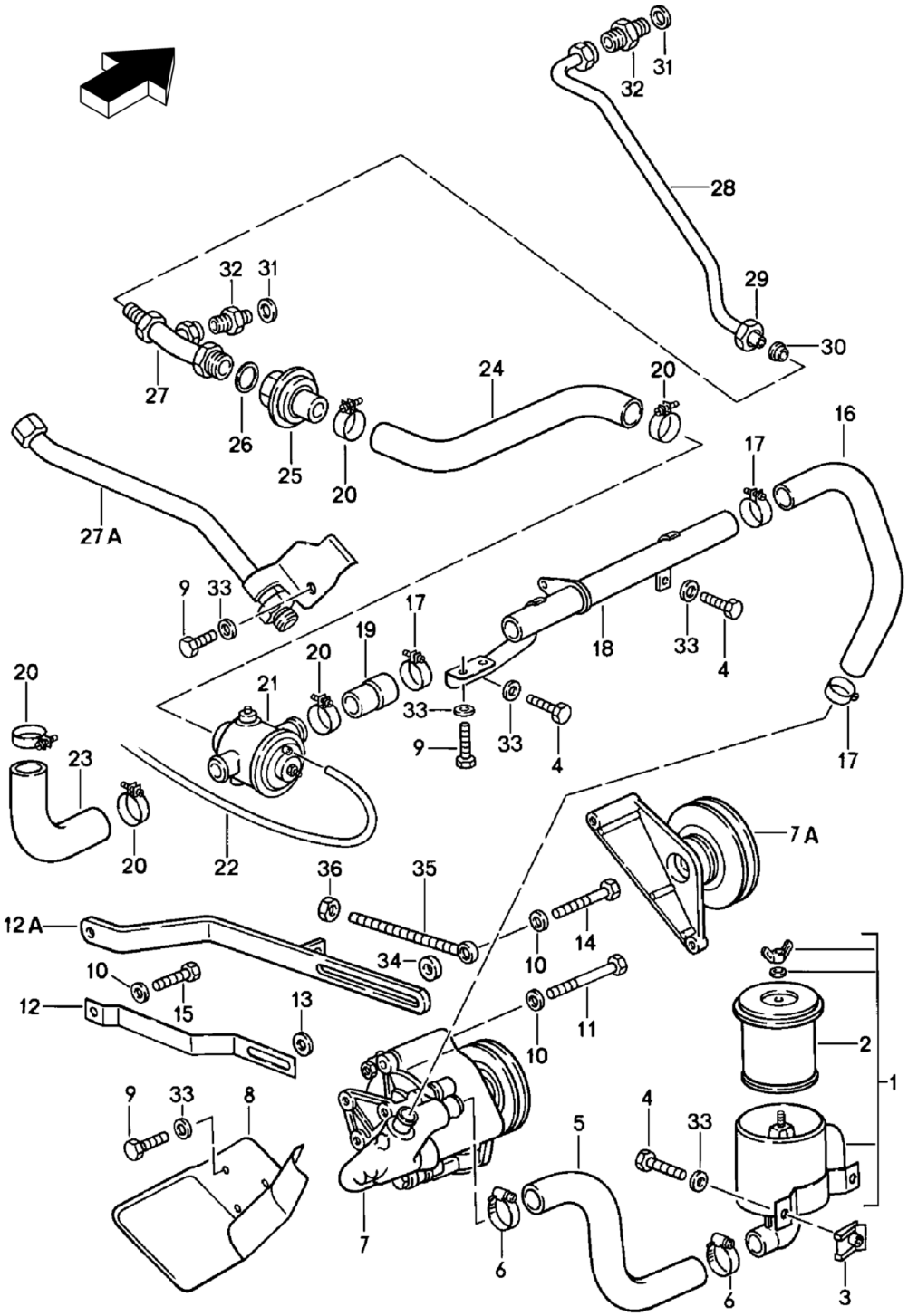

Model	Year	MG	SG	Illustration	Restrictions	UPD	7:02	27.10.2023
928	1978	1	08	108-000		738		

Pos	Part Number	Description	Remark	Qty	Model
		Ventilation component			
1	928 113 145 00	Air filter		1	
2	928 113 445 00	Secondary air filter element		1	
3	999 507 246 02	panel nut Discontinued part		2	
3	999 507 246 01	panel nut		2	
4	900 075 057 02	Hexagon bolt M 6 X 16		4	
4	900 075 057 03	Hexagon bolt M 6 X 16 No longer use the part here		4	
5	928 113 155 00	Molded hose		1	
6	N 024 511 2	Hose clamp		2	
7	928 113 109 04	Air pump		1	-12 2801,2802, 2809
8	928 113 125 05	Cover plate		1	
9	999 072 005 09	Hexagon nut M 6 X 12 Discontinued part		6	
9	999 072 005 01	Hexagon bolt M 6 X 12		6	
10	900 025 007 02	Washer Discontinued part		3	
10	900 025 007 03	Washer		3	
11	900 074 049 02	Screw M 8 X 110		1	
12	928 113 113 05	Brace for Air pump D >> - MJ 1979		1	
12A	928 113 113 10	Brace for Air pump D - MJ 1980>>		1	
13	900 025 007 02	Washer Discontinued part		1	
13	900 025 007 03	Washer		1	

Model	Year	MG	SG	Illustration	Restrictions	UPD	7:02	27.10.2023
928	1978	1	08	108-000		738		

Pos	Part Number	Description	Remark	Qty	Model
14	N 010 246 4	Hexagon bolt M 8 X 45 D >> - MJ 1979		1	
(14)	900 075 033 02	Threaded pin D - MJ 1980>>		1	
(14)	900 075 033 03	Threaded pin D - MJ 1980>>		1	
15	900 075 079 02	Hexagon bolt M 8 X 22		1	
16	928 113 139 02	Hose		1	
17	999 512 038 02	Hose clamp		3	
17	PCG 512 038 02	Hose clamp Discontinued part		3	
18	928 113 141 02	Air line D >> - MJ 1979		1	
(18)	928 113 141 03	Air line D - MJ 1980>>		1	
19	928 113 149 00	Hose Change-over valve		1	
20	PCG 512 237 02	Hose clamp		5	
21	930 113 147 01	Change-over valve		1	
-	999 239 003 40	Hose		*	
22		shorten to: D >> - MJ 1981	400 MM	1	
22		shorten to: D - MJ 1982>> - MJ 1982	650 MM	1	
23	928 113 159 02	Hose Air filter		1	
24	928 113 140 03	Hose Non-return valve		1	
25	911 113 115 01	Non-return valve		1	
25	911 113 115 01	Non-return valve		1	
26	900 123 060 30	seal ring		1	
27	928 113 136 00	Air line	right	1	
28	928 113 135 03	Air line	left	1	
29	900 104 020 02	Union nut		2	
30	N 020 823 1	die ring		1	

Model	Year	MG	SG	Illustration	Restrictions	UPD	7:02	27.10.2023
928	1978	1	08	108-000		738		

Pos	Part Number	Description	Remark	Qty	Model
31	900 123 018 30	seal ring		2	
32	900 915 005 02	connection piece		2	
33	N 011 524 7	Washer A 6,4 Discontinued part		6	
33	N 011 524 27	Washer A 6,4		6	
34	999 025 075 02	Washer 8,5 X 19 X 6 D - MJ 1980>>		1	
35	999 460 002 02	eye bolt AM 8 X 90 X 75 D - MJ 1980>>		1	
36	900 076 025 02	Hexagon nut M 8 Discontinued part		1	
36	900 076 064 02	Hexagon nut M 8		1	

Model	Year	MG	SG	Illustration	Restrictions	UPD	7:02	27.10.2023
928	1978	1	09	109-000		738		

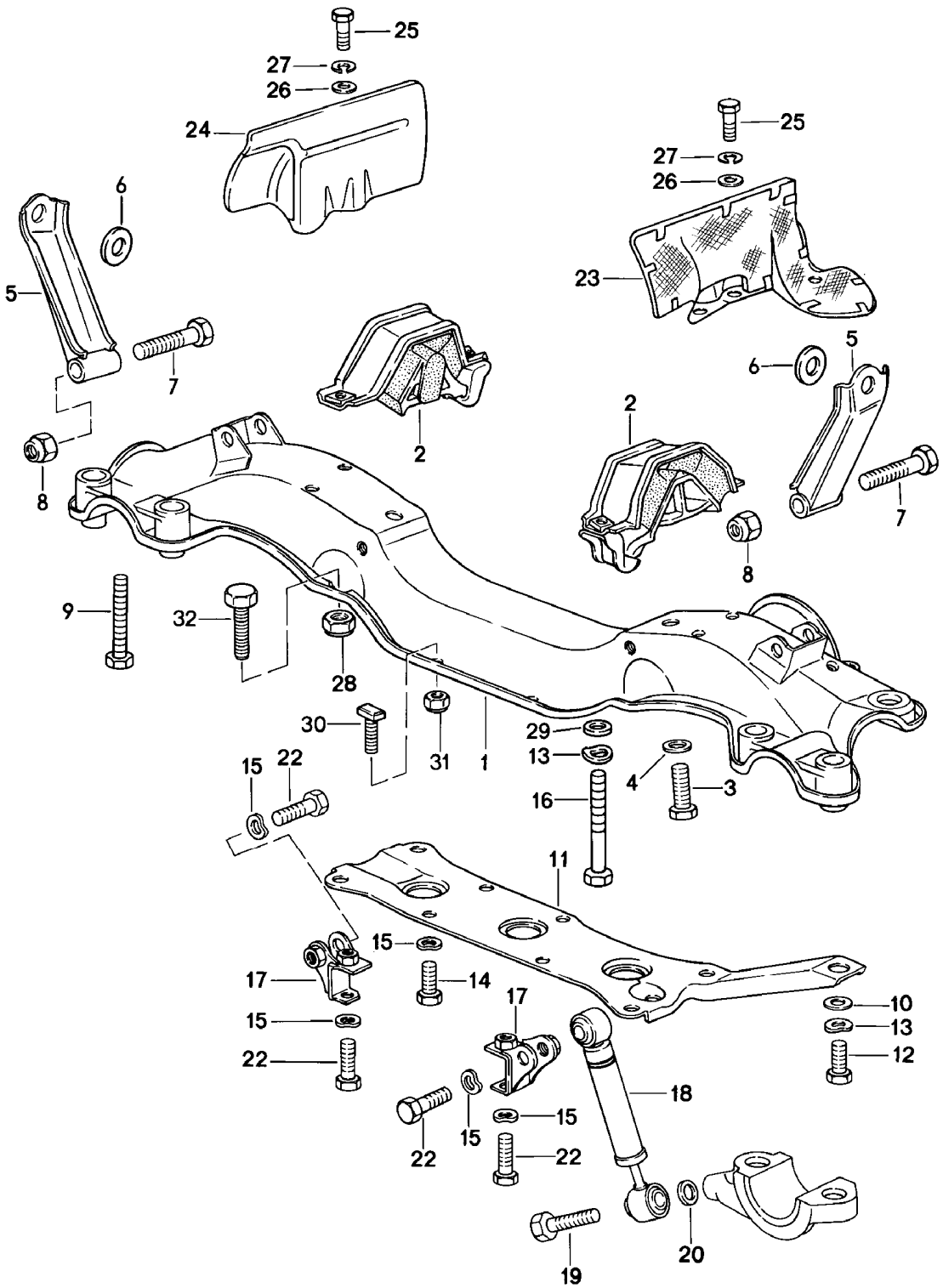

Model	Year	MG	SG	Illustration	Restrictions	UPD	7:02	27.10.2023
928	1978	1	09	109-000		738		

Pos	Part Number	Description	Remark	Qty	Model
		Engine lifting tackle			
1	928 375 011 04	Engine brackets	lhd	1	
(1)	927 375 011 00	Engine brackets D >> - MJ 1980	rhd	1	
(1)	927 375 011 04	Engine brackets D - MJ 1981>>	rhd	1	
2	928 375 043 02	engine mounting		2	
3	N 040 108 1	Hexagon bolt M 12 X 1,5 X 40		2	
4	901 333 143 01	Washer		2	
5	928 375 063 00	Support	left	1	
(5)	928 375 064 00	Support	right	1	
6	928 375 211 00	Washer		2	
7	N 010 156 3	Hexagon bolt M 12 X 1,5 X 70		2	
8	900 910 046 02	Locknut VM 12 X 1,5 Discontinued part		2	
8	999 084 439 09	Locknut VM 12 X 1,5 Discontinued part		2	
8	999 084 445 09	Locknut VM 12 X 1,5 Discontinued part		2	
8	999 084 445 01	Locknut VM 12 X 1,5		2	
9	N 010 455 3	Hexagon bolt M 10 X 55		2	
10	928 375 212 00	Washer		2	
11	928 375 109 01	Reinforcement plate	lhd	1	
(11)	927 375 021 00	Reinforcement plate	rhd	1	
12	900 075 043 02	Hexagon bolt M 10 X 30		3	
13	900 028 032 02	Spring washer B 10		6 6	
14	900 075 079 02	Hexagon bolt M 8 X 25		4	
15	N 012 241 8	Spring washer		8	

Model	Year	MG	SG	Illustration	Restrictions	UPD	7:02	27.10.2023
928	1978	1	09	109-000		738		

Pos	Part Number	Description	Remark	Qty	Model
16	N 010 500 3	Hexagon bolt M 10 X 110		4	
17	928 375 081 01	mounting for shock absorber	left	1	
(17)	928 375 082 01	mounting for shock absorber	right	1	
18	928 375 179 02	vibration damper		2	
19	N 010 450 5	Hexagon bolt M 10 X 50		2	
19	900 074 373 02	Hexagon bolt M 10 X 50		2	
20	900 089 002 02	Washer 10 MM		2	
22	N 010 340 6	Hexagon bolt M 8 X 40		4	
23	928 375 055 01	Guard plate	left	1	
24	928 375 056 01	Guard plate	right	1	
25	900 075 057 02	Hexagon bolt M 6 X 16		4	
25	900 075 057 03	Hexagon bolt M 6 X 16 No longer use the part here		4	
26	900 223 003 02	Washer		4	
27	N 012 006 4	spring ring B 6		4	
28	900 910 031 09	Locknut		4	
28	900 910 031 01	Locknut		4	
29	900 025 008 09	Washer Discontinued part		4	
29	900 025 008 04	Washer		4	
29	900 025 008 0E	Washer	yellow	4	
30	928 375 125 00	t-head screw D - MJ 1981>>		4	
31	900 910 022 02	Locknut D - MJ 1981>>		4	
32	N 010 445 2	Hexagon bolt M 10 X 45 D - MJ 1981>> Discontinued part		4	

Model	Year	MG	SG	Illustration	Restrictions	UPD	7:02	27.10.2023
928	1978	1	09	109-000		738		

Pos	Part Number	Description	Remark	Qty	Model
32	900 074 372 01	Hexagon bolt M 10 X 45 D - MJ 1981>>		4	

Model	Year	MG	SG	Illustration	Restrictions	UPD	7:02	27.10.2023
928	1978	1	98	198-000		738		

1

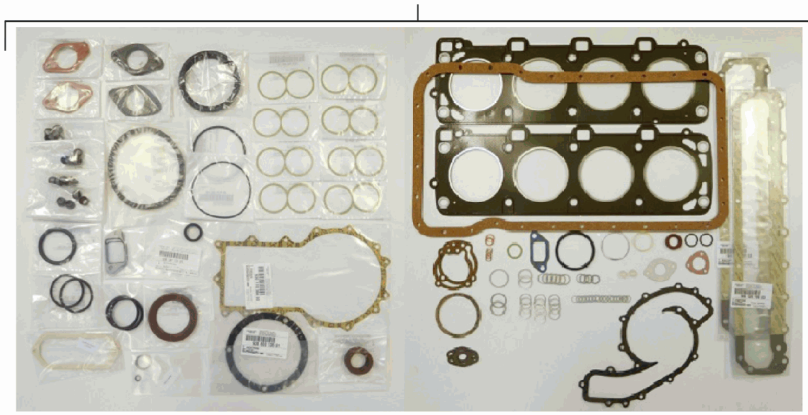

2

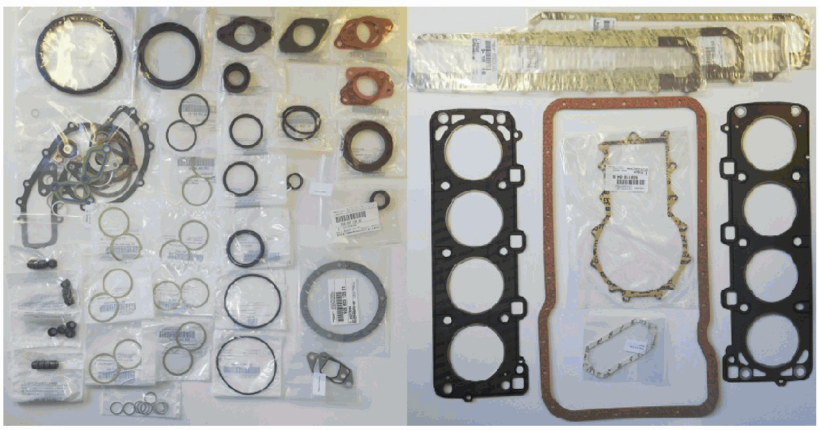

3

4

5

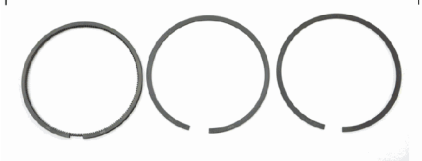

Model	Year	MG	SG	Illustration	Restrictions	UPD	7:02	27.10.2023
928	1978	1	98	198-000		738		

Pos	Part Number	Description	Remark	Qty	Model
		Service kit Gasket set repair set			
1	928 100 901 00	Gasket set Engine comprising:		1	-04 -18 2801,2809, 2810,2813
		also use:	000.043.004.00	1	
-	900 123 050 20	seal ring A 8 X 11,5		4	
-	900 123 033 20	seal ring A 10 X 13,5 CU		17	
-	900 123 005 20	seal ring A 12 X 16		2	
-	900 123 118 30	seal ring A 22 X 27		3	
-	999 113 275 40	Shaft oil seal A 20 X 30 X 7		1	
-	900 123 007 30	seal ring A 14 X 18		2	
-	900 123 149 70	seal ring A 22 X 29		1	
-	900 123 015 30	seal ring A 30 X 36		1	
-	900 123 018 30	seal ring A 16 X 20		6	
-	900 123 044 30	seal ring A 18 X 22		13	
-	900 123 050 30	seal ring A 8 X 11,5		3	
-	900 123 055 30	seal ring A 12 X 16		2	
-	900 123 060 30	seal ring A 24 X 29		2	
-	900 123 143 70	seal ring A 48 X 55		1	
-	911 104 193 03	Valve stem seal		16	
-	928 101 207 00	gasket for oil sump		1	
-	928 104 371 12	Cylinder head gasket	Cylinders 1-4	1	
-	928 104 372 12	Cylinder head gasket	Cylinder 5-8	1	

Model	Year	MG	SG	Illustration	Restrictions	UPD	7:02	27.10.2023
928	1978	1	98	198-000		738		

Pos	Part Number	Description	Remark	Qty	Model
-	928 105 184 00	seal ring Discontinued part		2	
-	928 105 184 01	seal ring		2	
-	928 105 189 02	Seal		2	
-	928 105 901 00	Seal for Camshaft housing Discontinued part		2	
-	928 106 134 03	Seal		1	
-	928 106 197 04	Seal for thermostat housing		2	
-	928 107 136 04	seal ring		1	
-	928 107 707 04	Seal for Oil funnel		1	
-	928 107 711 00	Seal		1	
-	928 110 330 03	Seal		8	
-	928 111 193 12	Seal		8	
-	928 113 179 01	Seal		2	
-	928 602 103 00	seal ring		1	
-	928 603 135 01	seal ring		1	
-	928 606 213 03	Seal		1	
-	930 110 122 00	seal ring		1	
-	930 110 394 00	Seal		1	
-	999 113 215 40	seal ring 90 X 110		1	
-	999 113 263 40	Shaft oil seal 60 X 85 X 10		1	
-	999 113 282 40	Shaft oil seal 30 X 47 X 7		2	
-	999 701 210 40	O-ring 20 X 2,5 Discontinued part		1	
-	999 701 210 4A	O-ring 20 X 2,5		1	
-	999 701 395 50	O-ring 7 X 2		1	

Model	Year	MG	SG	Illustration	Restrictions	UPD	7:02	27.10.2023
928	1978	1	98	198-000		738		

Pos	Part Number	Description	Remark	Qty	Model
-	999 701 425 40	O-ring 50 X 4		1	
-	999 701 633 40	O-ring 98 X 3		1	
-	999 701 436 40	O-ring 91 X 4 X 63		1	
-	928 107 169 01	Seal 29,2 X 3		1	
-	999 701 592 40	O-ring 18,3 X 2,4		2	
-	999 701 602 40	O-ring 50 X 5		2	
-	999 701 627 40	O-ring 53 X 7		1	
-	999 701 632 40	O-ring 65 X 5		1	
2	928 100 901 01	Gasket set Engine also use: comprising:	 000.043.004.00	1 1	2811,2812
-	900 123 050 20	seal ring A 8 X 11,5		4	
-	900 123 033 20	seal ring A 10 X 13,5 CU		17	
-	900 123 005 20	seal ring A 12 X 16		2	
-	900 123 118 30	seal ring A 22 X 27		3	
-	999 113 275 40	Shaft oil seal A 20 X 30 X 7		1	
-	900 123 007 30	seal ring A 14 X 18		2	
-	900 123 149 70	seal ring A 22 X 29		1	
-	900 123 015 30	seal ring A 30 X 36		1	
-	900 123 018 30	seal ring A 16 X 20		4	
-	900 123 044 30	seal ring A 18 X 22		13	
-	900 123 050 30	seal ring A 8 X 11,5		3	

Model	Year	MG	SG	Illustration	Restrictions	UPD	7:02	27.10.2023
928	1978	1	98	198-000		738		

Pos	Part Number	Description	Remark	Qty	Model
-	900 123 055 30	seal ring A 12 X 16		2	
-	900 123 060 30	seal ring A 24 X 29		2	
-	900 123 143 70	seal ring A 48 X 55		1	
-	928 104 193 03	Valve stem seal		16	
-	928 101 207 00	gasket for oil sump		1	
-	928 104 361 07	Cylinder head gasket	Cylinders 1-4	1	
-	928 104 362 07	Cylinder head gasket	Cylinder 5-8	1	
-	928 105 184 00	seal ring Discontinued part		2	
-	928 105 184 01	seal ring		2	
-	928 105 189 02	Seal		2	
-	928 105 901 00	Seal for Camshaft housing		2	
-	928 106 134 03	Seal		1	
-	928 106 197 04	Seal for thermostat housing		2	
-	928 107 136 04	seal ring		1	
-	928 107 707 04	Seal for Oil funnel		1	
-	928 107 711 00	Seal		1	
-	928 110 330 03	Seal		8	
-	928 111 193 12	Seal		8	
-	928 113 179 01	Seal		2	
-	928 602 103 00	seal ring		1	
-	928 603 135 01	seal ring		1	
-	928 606 213 03	Seal		1	
-	930 110 122 00	seal ring		1	
-	930 110 394 00	Seal		1	
-	999 113 215 40	seal ring 90 X 110		1	

Model	Year	MG	SG	Illustration	Restrictions	UPD	7:02	27.10.2023
928	1978	1	98	198-000		738		

Pos	Part Number	Description	Remark	Qty	Model
-	999 113 263 40	Shaft oil seal 60 X 85 10		1	
-	999 113 282 40	Shaft oil seal 30 X 47 X 7		2	
-	999 701 210 40	O-ring 20 X 2,5 Discontinued part		1	
-	999 701 210 4A	O-ring 20 X 2,5		1	
-	999 701 395 50	O-ring 7 X 2		1	
-	999 701 425 40	O-ring 50 X 4		1	
-	999 701 633 40	O-ring 98 X 3		1	
-	999 701 436 40	O-ring 91 X 4 X 63		1	
-	928 107 169 01	Seal 29,2 X 3		1	
-	999 701 592 40	O-ring 18,3 X 2,4		2	
-	999 701 602 40	O-ring 50 X 5		2	
-	999 701 627 40	O-ring 53 X 7		1	
-	999 701 632 40	O-ring 65 X 5		1	
-	928 100 931 00	1 set of maintenance parts for 20,000 km (12,500 mile) intervals F >> 92-88101 259 F >> 92-88200 053 F >> 92-88209 521 D - MJ 1978>> - MJ 1978		1	-04 2801
-		comprising:			
-	999 170 170 90	Spark plug		8	
-	928 107 201 05	oil filter Discontinued part		1	
-	928 107 201 07	oil filter red		1	-"IND"
-	900 123 011 30	seal ring		1	
-	928 110 147 02	Fuel filter		1	

Model	Year	MG	SG	Illustration	Restrictions	UPD	7:02	27.10.2023
928	1978	1	98	198-000		738		

Pos	Part Number	Description	Remark	Qty	Model
-	928 110 185 01	Air filter element		1	
-	928 113 445 00	Secondary air filter element		1	
-	928 100 931 01	1 set of maintenance parts for 20,000 km (12,500 mile) intervals F 92-88101 260>> F 92-88200 054>> F 92-88209 522>> D >> - MJ 1979		1	-04 2801
-		comprising:			
-	999 170 170 90	Spark plug		8	
-	928 107 201 05	oil filter Discontinued part		1	
-	928 107 201 07	oil filter red		1	-"IND"
-	900 123 011 30	seal ring		1	
-	928 110 147 09	Fuel filter		1	
-	928 110 185 01	Air filter element		1	
-	928 113 445 00	Secondary air filter element		1	
3	928 100 931 02	1 set of maintenance parts for 20,000 km (12,500 mile) intervals comprising: D - MJ 1980>>		1	2809,2810
-	999 170 170 90	Spark plug		8	
-	928 107 201 05	oil filter Discontinued part		1	
-	928 107 201 07	oil filter red		1	-"IND"
-	900 123 011 30	seal ring		1	
-	928 110 147 05	Fuel filter		1	
-	928 110 185 01	Air filter element		1	
-	928 113 445 00	Secondary air filter element		1	
4	928 100 931 03	1 set of maintenance parts for 20,000 km (12,500 mile) intervals comprising:		1	2811,2812
-	999 170 156 90	Spark plug		8	
-	928 107 201 05	oil filter Discontinued part		1	

Model	Year	MG	SG	Illustration	Restrictions	UPD	7:02	27.10.2023
928	1978	1	98	198-000		738		

Pos	Part Number	Description	Remark	Qty	Model
-	928 107 201 07	oil filter red		1	-"IND"
-	900 123 011 30	seal ring		1	
-	928 110 147 05	Fuel filter		1	
-	928 110 185 01	Air filter element		1	
-	928 113 445 00	Secondary air filter element		1	
(5)	928 103 901 00	1 set: piston rings for piston 928.103.074.02 928.103.075.02 D - MJ 1978>> - MJ 1978		X	-04 2801
(5)	928 103 902 00	1 set: piston rings for piston 95,00 MM D >> - MJ 1979		X	-04 2801
(5)	928 103 903 00	1 set: piston rings for piston 95,50 MM D >> - MJ 1979		X	-04 2801
(5)	928 103 904 00	1 set: piston rings for piston 96,00 MM D >> - MJ 1979		X	-04 2801
(5)	928 103 905 04	1 set: piston rings for piston 95,00 MM D - MJ 1980>>		X	-18 2809,2810, 2813
(5)	928 103 905 05	1 set: piston rings for piston 95,50 MM 1. oversize D - MJ 1980>>		X	-18 2809,2810, 2813
(5)	928 103 905 06	1 set: piston rings for piston 96,00 MM 2. oversize D - MJ 1980>>		X	-18 2809,2810, 2813

Model	Year	MG	SG	Illustration	Restrictions	UPD	7:02	27.10.2023
928	1978	1	98	198-000		738		

Pos	Part Number	Description	Remark	Qty	Model
-	928 103 906 11	1 set: piston rings for piston 97,00 MM		X	2811,2812
-	928 103 906 12	1 set: piston rings for piston 97,50 MM 1. oversize		X	2811,2812
-	928 103 906 03	1 set: piston rings for piston 98,00 MM 2. oversize		X	2811,2812
6	PCG 106 015 22	repair set for Coolant pump comprising:		1	
-	928 106 134 06	Seal		1	
-	928 105 176 01	Dead centre indicator		1	
-	900 976 010 01	Socket head bolt M 5 X 18		2	
-	900 025 080 01	Washer A 5,3		2	
-	900 378 030 01	Hexagon bolt	M6X20	5	
-	N 011 524 27	Washer	6,4X12,5X1,6	1	
-	900 378 013 01	Hexagon bolt	AM6X25	8	
-	N 040 307 1	Hexagon bolt M 6 X 73		1	
-	900 025 007 03	Washer	A8,4	3	
-	900 075 032 03	Hexagon bolt	M8X35	3	

Model	Year	MG	SG	Illustration	Restrictions	UPD	7:03	27.10.2023
928	1978	1	98	198-005		738		

Model	Year	MG	SG	Illustration	Restrictions	UPD	7:03	27.10.2023
928	1978	1	98	198-005		738		

Pos	Part Number	Description	Remark	Qty	Model
		engine oil Porsche Classic 10W50			924, 924 S 924 TURBO 928, 928 S 928 S4 928 GTS 944, 968
1	PCG 043 210 00	engine oil Porsche Classic 10W50 1L	All countries, not USA, Canada, Mexico Turkey China Russia Taiwan Malaysia Vietnam	1	924, 924 S 924 TURBO 928, 928 S 928 S4 928 GTS 944, 968
(1)	PCG 043 210 20	engine oil Porsche Classic 10W50 5L	All countries, not USA, Canada, Mexico Turkey China Russia Taiwan Malaysia Vietnam	1	924, 924 S 924 TURBO 928, 928 S 928 S4 928 GTS 944, 968
(1)	PCG 043 210 22	engine oil Porsche Classic 10W50 60L also use:	All countries, not USA, Canada, Mexico Turkey China Russia Taiwan Malaysia Vietnam 00004320990	1	924, 924 S 924 TURBO 928, 928 S 928 S4 928 GTS 944, 968
2	PCG 043 209 40	Oil change service trailer Porsche Classic 10W50	german	1	924,924 S 924 TURBO 928, 928 S 928 S4 928 GTS 944, 968
(2)	PCG 043 209 41	Oil change service trailer Porsche Classic 10W50	english	1	924,924 S 924 TURBO 928, 928 S 928 S4 928 GTS 944, 968
(2)	PCG 043 209 42	Oil change service trailer Porsche Classic 10W50	french	1	924,924 S 924 TURBO 928, 928 S 928 S4 928 GTS 944, 968

Model	Year	MG	SG	Illustration	Restrictions	UPD	7:03	27.10.2023
928	1978	1	98	198-005		738		

Pos	Part Number	Description	Remark	Qty	Model
(2)	PCG 043 209 43	Oil change service trailer Porsche Classic 10W50	italian	1	924,924 S 924 TURBO 928, 928 S 928 S4 928 GTS 944, 968
(2)	PCG 043 209 44	Oil change service trailer Porsche Classic 10W50	japanese	1	924,924 S 924 TURBO 928, 928 S 928 S4 928 GTS 944, 968
(2)	PCG 043 209 45	Oil change service trailer Porsche Classic 10W50	spanish	1	924,924 S 924 TURBO 928, 928 S 928 S4 928 GTS 944, 968
3	PCG 043 200 15	Sticker Porsche Classic 10W50 engine oil		1	924,924 S 924 TURBO 928, 928 S 928 S4 928 GTS 944, 968

Model	Year	MG	SG	Illustration	Restrictions	UPD	7:03	27.10.2023
928	1978	1	98	198-010		738		

Model	Year	MG	SG	Illustration	Restrictions	UPD	7:03	27.10.2023
928	1978	1	98	198-010		738		

Pos	Part Number	Description	Remark	Qty	Model
		Locking fluid Adhesive and sealant			
1	928 101 921 00	Locking fluid LOCTITE 270	high-strength 10ml	X	
2	000 043 306 48	Locking fluid LOCTITE 221	10ml Low-strength	X	
3	000 043 010 00	sealant LOCTITE 574	50ml	X	
4	000 043 011 00	Locking fluid LOCTITE 638 for balancer shaft	10ml	X	
5	000 043 306 46	adhesive LOCTITE 317	50ml	X	
6	000 043 306 39	activator AKTIVATOR NF 736	180ml	X	
7	PCG 043 019 01	sealant SILASTIK 730 RTV	90ml	X	
8	000 043 004 00	Assembly paste OPTIMOLY - HT	90 gram	X	
9	000 043 020 00	Assembly paste OPTIMOLY - TA	100 gram silver	X	
10	000 043 110 01	high temperature grease OPTITEMP PU35	100 gram	X	
11	G 052 778 A2	Lock cylinder grease spray Spray can		X	
12	PCG 043 110 00	grease Porsche Classic	180 gram	X	
13	PCG 043 300 87	sealant Engine	40ml	X	

Model	Year	MG	SG	Illustration	Restrictions	UPD	7:03	27.10.2023
928	1978	2	01	201-000		738		

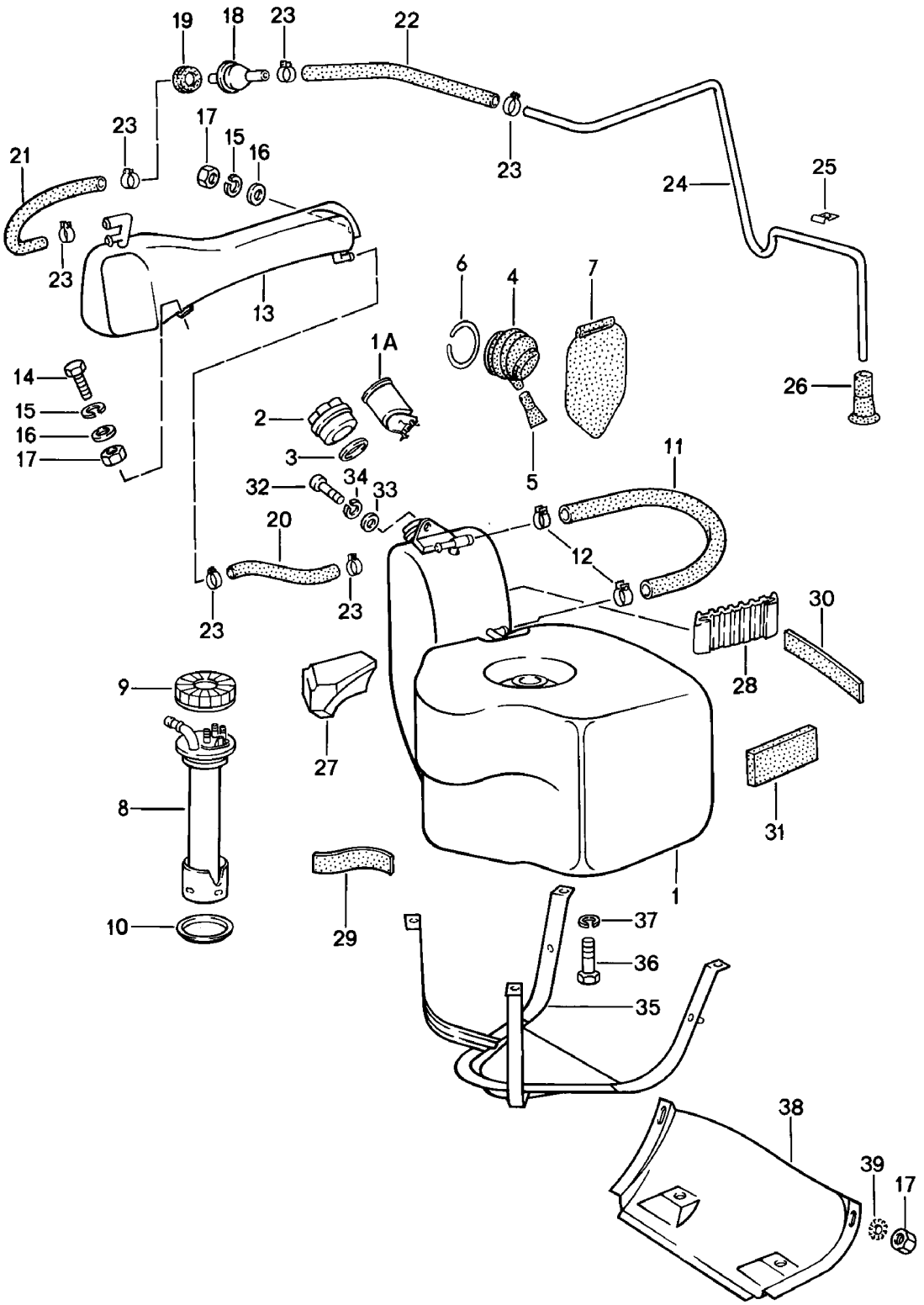

Model	Year	MG	SG	Illustration	Restrictions	UPD	7:03	27.10.2023
928	1978	2	01	201-000		738		

Pos	Part Number	Description	Remark	Qty	Model
		Fuel tank			
1	928 201 003 03	Fuel tank		1	
2	928 201 901 03	End cap with stipulated lock number When ordering, please provide the vehicle identification and the lock number Discontinued part		1	
(2)	928 201 903 02	End cap W/o stipulated lock number		1	
3	928 201 275 03	seal ring		1	
4	928 201 333 02	Grommet		1	
5	928 201 255 02	Drain nozzle		1	
6	900 906 046 00	outer ring		1	
7	928 201 057 02	Protective cloth fuel filler neck		1	
8	928 641 030 01	Sender for fuel gauge Fuel tank		1	
9	113 201 375	Union nut		1	
10	928 201 327 02	Seal for Sender for fuel gauge		1	
11	928 201 194 02	Vent hose		1	
(11)	928 201 194 03	Hose D - MJ 1980>> Discontinued part		1	"AUS"
(11)	928 201 194 04	Hose D - MJ 1980>> Discontinued part		1	"AUS"
(11)	928 201 194 05	Hose D - MJ 1980>>		1	"AUS"
12	N 023 565 3	Hose clamp		2	
13	928 201 013 02	Reservoir Tank ventilation with: Connecting pipe F >> 92-89101 296 F >> 92-89201 042 F >> 92-89209 557 D >> - MJ 1979		1	

Model	Year	MG	SG	Illustration	Restrictions	UPD	7:03	27.10.2023
928	1978	2	01	201-000		738		

Pos	Part Number	Description	Remark	Qty	Model
(13)	928 201 013 03	Reservoir Tank ventilation without: Connecting pipe F 92-89101 297>> F 92-89201 043>> F 92-89209 558>> D >> - MJ 1982		1	
14	900 075 014 02	Hexagon bolt M 6 X 18 Discontinued part		2	
14	900 075 014 03	Hexagon bolt M 6 X 18		2	
15	N 012 006 4	spring ring B 6		2	
16	N 011 524 7	Washer Discontinued part		2	
16	N 011 524 27	Washer		2	
17	900 076 010 02	Nut Discontinued part		4	
17	900 076 010 0B	Nut		4	
17	900 076 010 03	Nut		4	
18	928 201 083 02	Shut-off valve		1	
19	928 201 197 02	Grommet		1	
-	999 181 716 50	Hose 9,5 X 15,5		*	
20		shorten to:	250 MM	1	
21		shorten to:	850 MM	1	
22		shorten to:	640 MM	1	
23	N 023 569 2	Hose clamp S 16/9 Discontinued part		6	
23	PCG 023 569 2	Hose clamp S 16/9		6	
24	928 201 135 02	Ventilation pipe D >> - MJ 1979		1	
(24)	928 201 135 03	Ventilation pipe D - MJ 1980>>		1	
25	928 201 343 02	Clamp		2	
26	928 201 195 02	end piece		1	

Model	Year	MG	SG	Illustration	Restrictions	UPD	7:03	27.10.2023
928	1978	2	01	201-000		738		

Pos	Part Number	Description	Remark	Qty	Model
27	928 201 107 02	Underlay		1	
28	928 201 249 02	Underlay D >> - MJ 1979		1	
-	999 911 227 40	Spacer		*	
29		shorten to:	210 MM	1	
30		shorten to:	290 MM	2	
31	928 201 345 02	Distance piece		1	
32	N 014 707 2	Socket head bolt M 8 X 15 Discontinued part		1	
32	900 067 131 03	Socket head bolt M 8 X 15		1	
33	900 025 007 02	Washer Discontinued part		1	
33	900 025 007 03	Washer		1	
34	900 142 002 01	spring ring		1	
35	928 201 313 02	bracket for fuel tank D >> - MJ 1979		1	
(35)	928 201 313 03	bracket for fuel tank D - MJ 1980>>		1	
36	N 010 246 4	Hexagon bolt M 8 X 45		4	
37	900 027 015 02	spring ring B 8		4	
37	900 027 015 03	spring ring B 8		4	
38	928 201 145 02	Cover D >> - MJ 1979		1	
(38)	928 201 145 03	Cover D - MJ 1980>>		1	
39	N 042 121 3	Toothed washer		2	

Model	Year	MG	SG	Illustration	Restrictions	UPD	7:03	27.10.2023
928	1978	2	01	201-005		738		

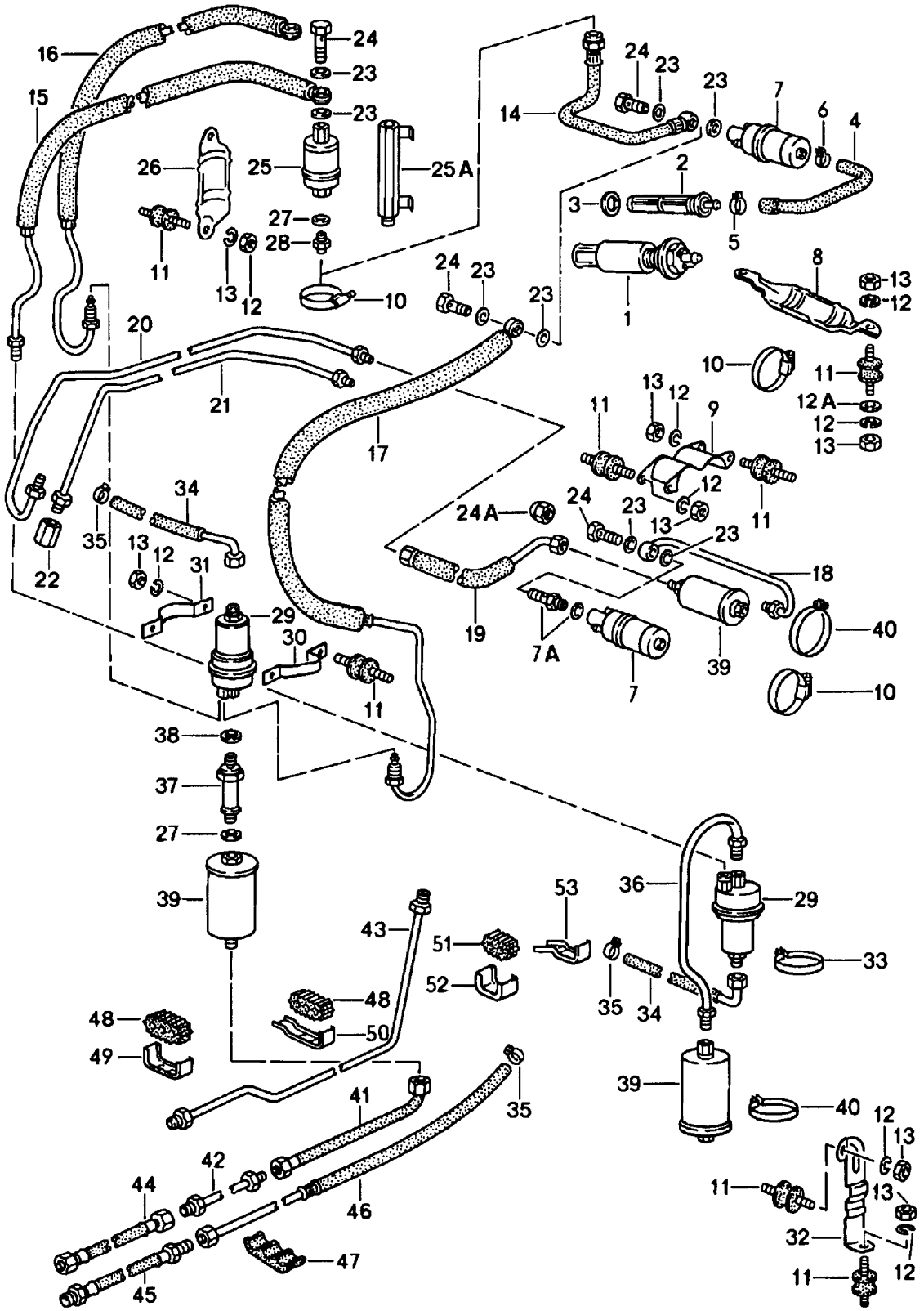

Model	Year	MG	SG	Illustration	Restrictions	UPD	7:03	27.10.2023
928	1978	2	01	201-005		738		

Pos	Part Number	Description	Remark	Qty	Model
		Fuel system			
1	928 608 013 00	pre-supply pump F 92-89100 334>> F 92-89200 014>> F 92-89209 528>> D >> - MJ 1979 Discontinued part		1	"USA","CDN"
1	928 608 013 01	pre-supply pump F 92-89100 334>> F 92-89200 014>> F 92-89209 528>>		1	"USA","CDN"
(2)	928 201 081 03	strainer M 36 X 1,5 F >> 92-88101 287 F >> 92-88200 053 F >> 92-88209 527		1	
2	928 201 081 04	Fuel filter M 37 X 1,5 Discontinued part with: pre-supply pump F 92-88101 288>> F 92-88200 054>> F 92-88209 528>>		1	
3	928 201 187 02	seal ring		1	
(4)	928 356 550 04	Fuel hose only in conj. with: pre-supply pump D >> - MJ 1979		1	"USA","CDN", "J..","AUS"
4	928 356 550 05	Fuel hose		1	
5	999 512 346 00	Hose clamp S 20/9		1	
6	999 512 554 00	Hose clamp 12 - 22 / 9		1	
7	911 608 102 00	Fuel pump D >> - MJ 1980		1	
7	911 608 102 02	Fuel pump		1	
7A	893 906 093	Non-return valve		1	
8	928 608 125 00	Bracket D >> - MJ 1979		1	
9	928 356 151 00	Bracket D - MJ 1980>>		1	
10	999 512 394 00	Hose clamp		1	
11	944 610 115 00	Bonded rubber bush		6	

Model	Year	MG	SG	Illustration	Restrictions	UPD	7:03	27.10.2023
928	1978	2	01	201-005		738		

Pos	Part Number	Description	Remark	Qty	Model
12	N 012 006 4	spring ring B 6		12	
12A	N 011 666 7	Washer		4	
13	900 076 010 02	Nut Discontinued part		12	
13	900 076 010 0B	Nut		12	
13	900 076 010 03	Nut		12	
14	928 356 021 01	Fuel hose F >> 92-88101 259 F >> 92-89200 013 F >> 92-89209 527		1	
15	928 356 025 02	Fuel line F >> 92-88101 259 Discontinued part		1	
15	928 356 025 04	Fuel line F >> 92-88101 259		1	
17	928 356 019 00	Fuel line D >> - MJ 1979		1	
18	928 356 063 10	Fuel line D - MJ 1980>> Discontinued part		1	
18	928 356 063 11	Fuel line D - MJ 1980>>		1	
19	928 356 053 01	Fuel line D - MJ 1980>>		1	
20	928 356 051 00	Fuel line D - MJ 1980>> Discontinued part		1	
20	928 356 051 01	Fuel line D - MJ 1980>>		1	
23	900 123 005 20	seal ring		4	
24	900 175 020 02	Banjo bolt Discontinued part		2	
24	900 175 020 01	Banjo bolt		2	
25	930 608 113 00	Fuel pump 2 F >> 92-88100 375 F >> 92-89200 013 F >> 92-89209 527		1	
25A	928 356 617 00	Intermediate piece D >> - MJ 1979		1	

Model	Year	MG	SG	Illustration	Restrictions	UPD	7:03	27.10.2023
928	1978	2	01	201-005		738		

Pos	Part Number	Description	Remark	Qty	Model
26	911 608 105 00	Bracket D >> - MJ 1979		1	
27	N 013 849 2	seal ring D >> - MJ 1979		2	
28	N 020 702 1	Screwed socket D >> - MJ 1979		1	
29	928 110 197 06	accumulator F >> 92-88101 259		1	
(29)	928 110 197 04	accumulator F 92-88101 260>> F >> 92-89101 296 with: Connector union Fuel line Discontinued part		1	
(29)	928 110 197 06	accumulator F 92-88101 260>> F >> 92-89101 296 without: Connector union Fuel line modify in workshop		1	
(29)	928 110 197 06	accumulator F 92-89101 297>> without: Connector union Fuel line		1	
30	928 356 621 00	Retainer bracket D >> - MJ 1979	front	1	
31	928 356 623 00	Retainer bracket D >> - MJ 1979	rear	1	
32	928 356 639 00	Bracket D - MJ 1980>>		1	
33	999 512 288 02	Clip D >> - MJ 1979		1	
(33)	999 512 199 02	Clip		1	
34	928 356 032 03	Fuel line F >> 92-89101 296 F >> 92-89201 042 F >> 92-89209 557		1	
35	N 023 569 2	Hose clamp S 16/9 Discontinued part		2	
35	PCG 023 569 2	Hose clamp S 16/9		2	

Model	Year	MG	SG	Illustration	Restrictions	UPD	7:03	27.10.2023
928	1978	2	01	201-005		738		

Pos	Part Number	Description	Remark	Qty	Model
36	928 356 028 00	Fuel line F >> 92-88101 259		1	
37	928 356 619 01	Connecting piece F 92-88101 260>> D >> - MJ 1979		1	
38	900 123 018 30	seal ring D >> - MJ 1979		1	
(39)	931 110 149 04	Fuel filter F >> 92-88101 259		1	
(39)	928 110 147 09	Fuel filter F 92-88101 260>> F 92-88200 054>> F 92-88209 522>> D >> - MJ 1979		1	
39	928 110 147 05	Fuel filter D - MJ 1980>>		1	
40	999 512 276 02	Clip Discontinued part		2	
40	999 512 276 0B	Clip		2	
41	928 356 037 00	Fuel hose D >> - MJ 1979		1	
-	999 511 121 40	Clamp D >> - MJ 1979		1	
-	900 143 077 02	panel screw 4,2 X 32 D >> - MJ 1979		1	
42	928 356 029 00	Fuel line fuel metering valve F >> 92-88101 259 F >> 92-88200 053		1	
(42)	928 356 029 01	Fuel line fuel metering valve F 92-88101 260>> F 92-88100 054>> D >> - MJ 1979		1	
43	928 356 029 03	Fuel line fuel metering valve D - MJ 1980>>		1	
44	928 356 039 00	Fuel hose fuel metering valve F >> 92-A0800 878 F >> 92-A0820 538 F >> 92-A0811 105		1	
(44)	928 356 079 00	Fuel hose F 92-A0800 879>> F 92-A0820 539>>		1	

Model	Year	MG	SG	Illustration	Restrictions	UPD	7:03	27.10.2023
928	1978	2	01	201-005		738		

Pos	Part Number	Description	Remark	Qty	Model
(45)	928 356 041 00	Fuel hose D >> - MJ 1978	return	1	
(45)	928 356 041 02	Fuel hose D >> - MJ 1979		1	
45	928 356 041 03	Fuel hose D - MJ 1979>>		1	
(45)	928 356 081 00	Fuel hose F 92-A0800 879>> F 92-A0820 539>>		1	
46	928 356 031 01	Fuel line Fuel tank	return	1	
47	928 356 543 02	dual clip D >> - MJ 1979		9	
48	928 356 521 00	Rubber bush D - MJ 1980>>		5	
49	928 356 523 00	Mounting bar D - MJ 1980>>		4	
50	928 356 524 00	Mounting bar D - MJ 1980>>		1	
51	928 356 525 00	Rubber bush D - MJ 1980>>		8	
52	928 356 527 00	Mounting bar D - MJ 1980>>		7	
53	928 356 647 00	Mounting bar D - MJ 1980>>		1	
-		Fuel pump with: pressure damper for For retrofitting to use after: MOD. 80			
-	928 356 063 01	Fuel line D - MJ 1980>>		1	
-	928 356 151 01	Bracket for Fuel pump and Fuel filter D - MJ 1980>>		1	
-	928 356 905 00	pressure damper D - MJ 1980>>		1	
-	928 356 907 00	Non-return valve D - MJ 1980>>		1	

Model	Year	MG	SG	Illustration	Restrictions	UPD	7:03	27.10.2023
928	1978	2	01	201-005		738		

Pos	Part Number	Description	Remark	Qty	Model
-	900 123 005 20	seal ring A 12 X 16 D - MJ 1980>>		2	

Model	Year	MG	SG	Illustration	Restrictions	UPD	7:04	27.10.2023
928	1978	2	01	201-010		738		

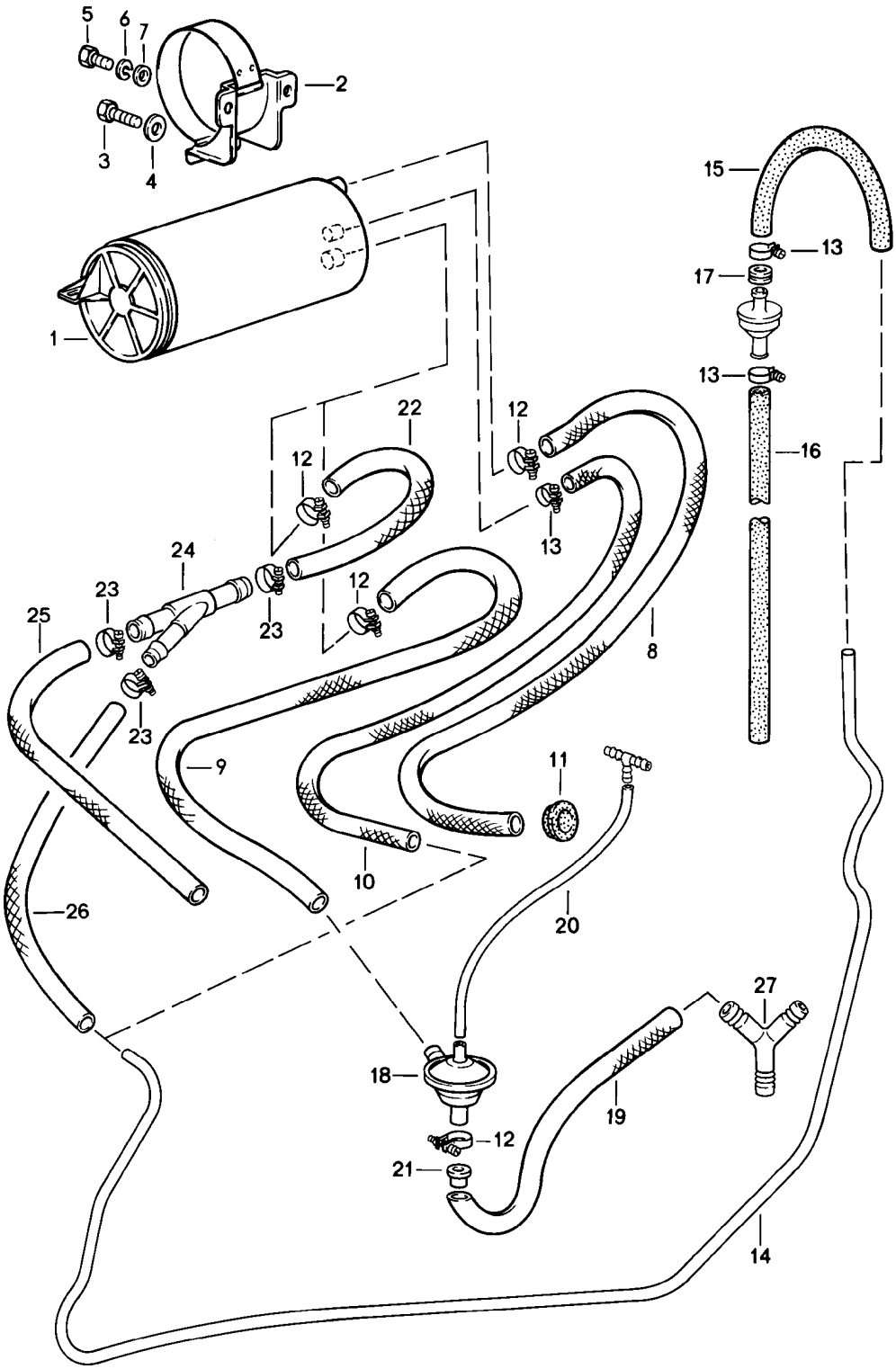

Model	Year	MG	SG	Illustration	Restrictions	UPD	7:04	27.10.2023
928	1978	2	01	201-010		738		

Pos	Part Number	Description	Remark	Qty	Model
		Tank ventilation			
-		**For country-specific vehicle type:** **USA / CDN / J**			
1	993 201 221 01	**Activated charcoal container**		1	
1	993 201 221 03	**Activated charcoal container**		1	
2	928 201 015 02	**Console**		1	
3	900 075 014 02	**Hexagon bolt** **M 6 X 18** **Discontinued part**		1	
3	900 075 014 03	**Hexagon bolt** **M 6 X 18**		1	
4	803 817 121	**Washer** **B 6,4 $ 18 MM**		1	
5	999 072 005 09	**Hexagon nut** **M 6 X 12** **Discontinued part**		2	
5	999 072 005 01	**Hexagon bolt** **M 6 X 12**		2	
6	N 012 026 3	**spring ring**		2	
7	N 011 524 7	**Washer** **Discontinued part**		2	
7	N 011 524 27	**Washer**		2	
8	928 201 009 02	**Hose** **Air filter** **D >> - MJ 1978**		1	
(8)	928 201 009 03	**Hose** **Air filter** **D >> - MJ 1979**		1	
(8)	999 180 106 50	**Fuel hose** **12 X 17 X 680** **D - MJ 1980>>**		*	
9	928 201 008 03	**Hose**		1	
10	928 201 006 02	**Hose** **Reservoir**		1	
11	021 119 569 A	**Rubber grommet**		3	
12	999 512 554 00	**Hose clamp** **12 - 22 / 9**		4	
13	N 023 569 2	**Hose clamp** **S 16/9** **Discontinued part**		4	

Model	Year	MG	SG	Illustration	Restrictions	UPD	7:04	27.10.2023
928	1978	2	01	201-010		738		

Pos	Part Number	Description	Remark	Qty	Model
13	PCG 023 569 2	Hose clamp S 16/9		4	
14	928 201 341 02	Breather line D >> - MJ 1979		1	
(14)	928 201 341 04	Breather line D - MJ 1980>>		1	
-	999 181 716 50	Hose 9,5 X 15,5		*	
15		shorten to:	400 MM	1	
16		shorten to:	850 MM	1	
17	999 702 119 50	Rubber grommet		1	
(18)	928 110 429 03	Vacuum valve D >> - MJ 1980		1	PR:479
-	999 239 016 40	Hose 13 X 18		*	
19		shorten to: D >> - MJ 1980	470 MM	1	PR:479
19		shorten to: D - MJ 1982>> - MJ 1982	280 MM	1	-18 2815
-	999 239 003 40	Hose		*	
20		shorten to:	500 MM	1	
22	928 201 008 04	Molded hose D - MJ 1980>>		1	
23	900 272 003 02	Hose clamp D - MJ 1980>> Discontinued part		3	
23	999 512 554 00	Hose clamp D - MJ 1980>>		3	
24	928 201 219 02	Connecting piece D - MJ 1980>>		1	
-	999 181 168 50	Hose 12 X 18,5 D - MJ 1980>>		*	
25		shorten to:	380 MM	1	
(25)		shorten to:	800 MM	1	
-	999 181 716 50	Hose 9,5 X 15,5		*	
26		shorten to: D - MJ 1980>>	530 MM	1	

Model	Year	MG	SG	Illustration	Restrictions	UPD	7:04	27.10.2023
928	1978	2	01	201-010		738		

Pos	Part Number	Description	Remark	Qty	Model
27	928 110 273 00	Y-piece D - MJ 1980>>		1	

Model	Year	MG	SG	Illustration	Restrictions	UPD	7:04	27.10.2023
928	1978	2	02	202-000		738		

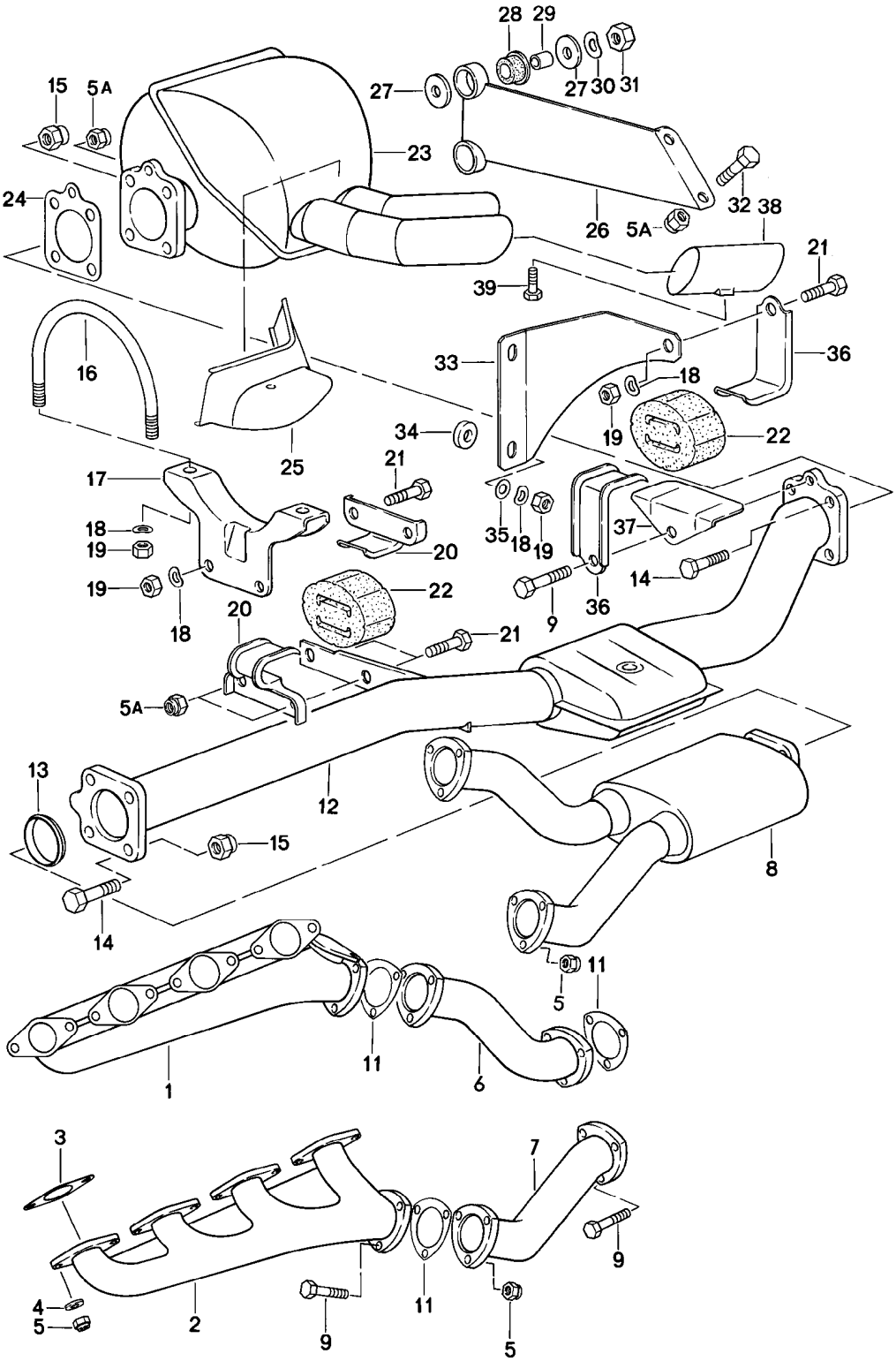

Model	Year	MG	SG	Illustration	Restrictions	UPD	7:04	27.10.2023
928	1978	2	02	202-000		738		

Pos	Part Number	Description	Remark	Qty	Model
		exhaust system D - MJ 1978>> - MJ 1978			
1	928 111 139 09	Exhaust manifolds	lhd Cylinders 1-4	1	
		also use:	00004300400	1	
(1)	927 111 138 02	Exhaust manifolds	rhd Cylinders 1-4	1	
		also use:	00004300400	1	
(1)	927 111 138 03	Exhaust manifolds	rhd Cylinders 1-4	1	
		also use:	00004300400	1	
2	928 111 137 00	Exhaust manifolds Discontinued part	Cylinder 5-8	1	
2	928 111 140 02	Exhaust manifolds	Cylinder 5-8	1	
		also use:	00004300400	1	
3	928 111 193 12	Seal		8	
4	928 111 181 00	Washer		16	
5	999 084 052 02	Locknut		30	
5A	999 084 041 02	Locknut		4	
6	928 111 052 04	Exhaust pipe	right	1	
		also use:	00004300400	1	
7	928 111 051 04	Exhaust pipe	left	1	
		also use:	00004300400	1	
8	928 111 082 07	Front silencer		1	
		also use:	00004300400	1	
9	900 074 287 02	Hexagon bolt M 8 X 35		13	
-	900 074 259 00	Hexagon bolt M 8 X 38		1	
11	928 111 127 02	Seal		2	
(11)	928 111 127 02	Seal (asbestos free)		2	
12	928 111 030 03	Centre silencer		1	
		also use:	00004300400	1	
13	928 111 244 01	seal ring		1	
14	900 155 033 00	Hexagon bolt M 10 X 38		8	
15	999 084 047 02	Locknut		8	
16	928 111 227 01	arm		1	

Model	Year	MG	SG	Illustration	Restrictions	UPD	7:04	27.10.2023
928	1978	2	02	202-000		738		

Pos	Part Number	Description	Remark	Qty	Model
17	928 111 061 00	Bracket		1	
18	N 012 241 8	Spring washer		9	
19	900 076 025 02	Hexagon nut Discontinued part		9	
19	900 076 064 02	Hexagon nut		9	
20	928 111 261 02	Hooks		2	
21	900 075 087 02	Hexagon bolt M 8 X 16 Discontinued part		5	
21	900 075 087 03	Hexagon bolt M 8 X 16		5	
21	900 075 087 04	Hexagon bolt M 8 X 16	M8X16 yellow	5	
22	928 111 259 02	Rubber bush		2	
23	928 111 031 03	Silencer also use:	 00004300400	1 1	
24	928 111 135 01	Seal		1	
25	928 111 242 01	Guard plate		1	
-	999 507 326 02	Cage nut B 4,8 X 18,5		2	
-	900 075 057 02	Hexagon bolt M 6 X 16		2	
-	900 075 057 03	Hexagon bolt M 6 X 16 No longer use the part here		2	
-	N 011 524 7	Washer Discontinued part		2	
-	N 011 524 27	Washer		2	
26	928 111 238 06	Carrier		1	
27	999 151 034 02	Washer		4	
28	928 111 252 00	Rubber bush		4	
29	928 111 253 00	Spacer pipe		2	
30	900 028 014 02	Spring washer Discontinued part		2	
30	900 028 014 03	Spring washer		2	
31	N 011 020 8	Hexagon nut M 12 X 1,5 Discontinued part		2	

Model	Year	MG	SG	Illustration	Restrictions	UPD	7:04	27.10.2023
928	1978	2	02	202-000		738		

Pos	Part Number	Description	Remark	Qty	Model
31	900 034 036 01	Hexagon nut M 12 X 1,5		2	
32	N 010 239 11	Hexagon bolt M 8 X 18 Discontinued part		2	
32	N 010 239 30	Hexagon bolt M 8 X 18		2	
33	928 111 266 00	Carrier		1	
34	928 111 267 00	Spacer ring		1	
35	900 151 008 02	Washer		2	
36	928 111 264 01	Hooks		2	
37	928 111 265 00	Guard plate		1	
38	928 111 271 01	Trim for exhaust tail pipe		2	
39	900 075 001 07	Hexagon bolt M 5 X 8		2	

Model	Year	MG	SG	Illustration	Restrictions	UPD	7:04	27.10.2023
928	1978	2	02	202-005		738		

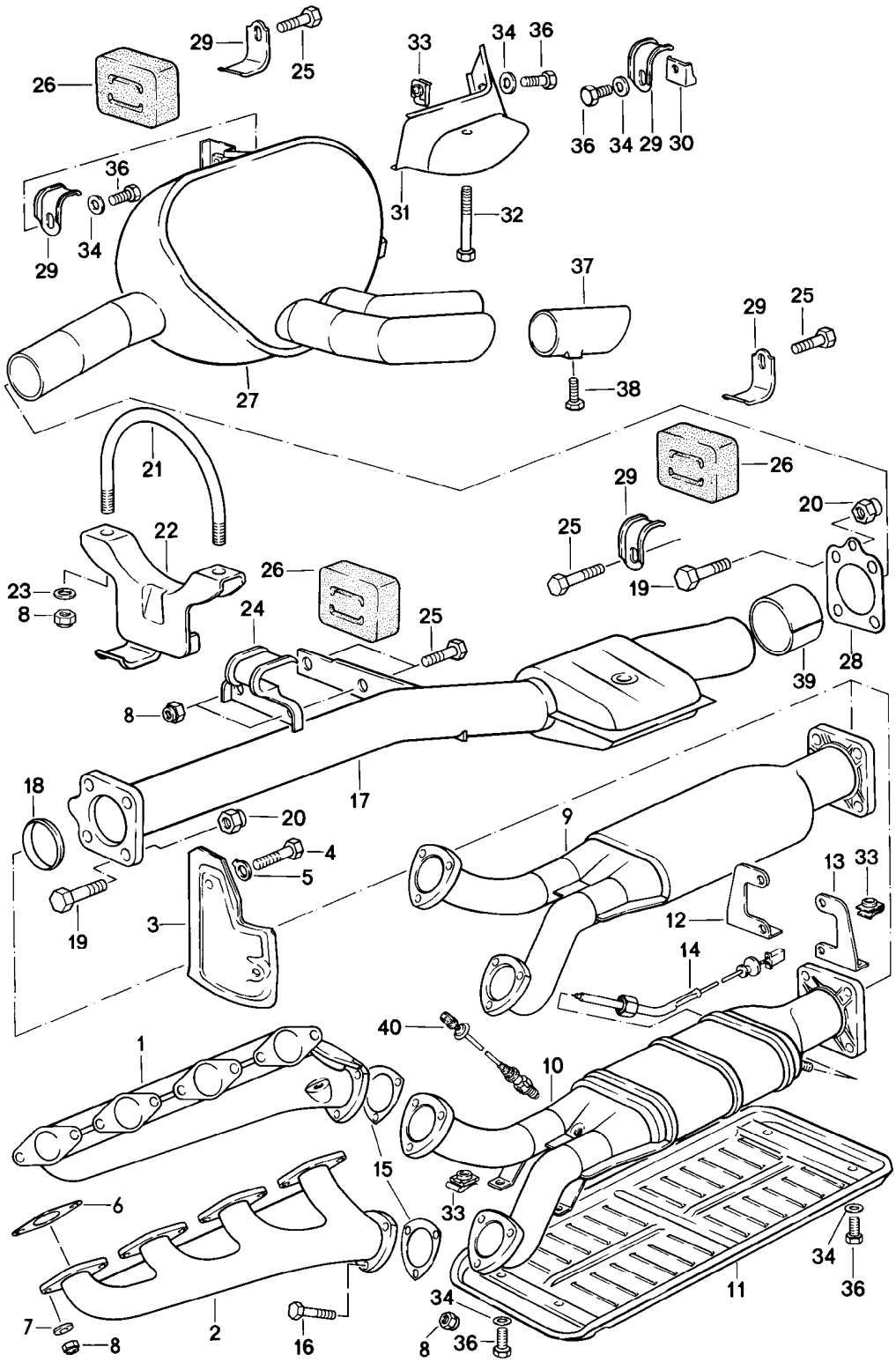

Model	Year	MG	SG	Illustration	Restrictions	UPD	7:04	27.10.2023
928	1978	2	02	202-005		738		

Pos	Part Number	Description	Remark	Qty	Model
		exhaust system D - MJ 1979>>			
-		note: Dual tailpipe See main group 2 2/02/10			
1	928 111 139 09	Exhaust manifolds	lhd Cylinders 1-4	1	
		also use:	00004300400	1	
(1)	927 111 138 02	Exhaust manifolds D >> - MJ 1980	rhd Cylinders 1-4	1	
		also use:	00004300400	1	
(1)	927 111 138 03	Exhaust manifolds	rhd Cylinders 1-4	1	
		also use:	00004300400	1	
1	927 111 138 05	Exhaust manifolds	rhd Cylinders 1-4	1	
		also use:	00004300400	1	
2	928 111 137 00	Exhaust manifolds D >> - MJ 1979	Cylinder 5-8	1	
		also use:	00004300400	1	
2	928 111 140 02	Exhaust manifolds	lhd Cylinder 5-8	1	
		also use:	00004300400	1	
3	927 111 149 02	Guard plate	rhd	1	
4	N 010 208 5	Hexagon bolt M 6 X 8	rhd	2	
5	900 020 001 01	Washer 6,4		2	
6	928 111 193 12	Seal		8	
7	928 111 181 00	Washer		16	
8	999 084 052 02	Locknut		28	
9	928 111 082 07	Front silencer		1	
		also use:	00004300400	1	
15	928 111 127 02	Seal Discontinued part		2	
(15)	928 111 127 02	Seal (asbestos free)		2	
16	900 074 287 02	Hexagon bolt M 8 X 35 D >> - MJ 1979		6	
(16)	900 074 287 02	Hexagon bolt D - MJ 1980>>		6	

Model	Year	MG	SG	Illustration	Restrictions	UPD	7:04	27.10.2023
928	1978	2	02	202-005		738		

Pos	Part Number	Description	Remark	Qty	Model
(17)	928 111 030 03	Centre silencer D >> - MJ 1979 also use:	 00004300400	1 1	
17	928 111 934 00	Centre silencer D >> - MJ 1980 Discontinued part		1	
17	928 111 934 00	Centre silencer D - MJ 1980>> also use:	 00004300400	1 1	
18	928 111 244 01	seal ring D >> - MJ 1979		1	
18	928 111 244 03	seal ring D - MJ 1980>> Discontinued part		1	
18	928 111 244 04	seal ring D - MJ 1980>>		1	
19	900 155 033 00	Hexagon bolt M 10 X 38 D >> - MJ 1979 Discontinued part		8	
(19)	N 010 020 2	Hexagon bolt M10 X 38 D - MJ 1980>>		4	
20	999 084 047 02	Locknut		8	
21	928 111 227 01	arm		1	
22	928 111 061 00	Bracket		1	
23	900 025 007 02	Washer A 8,4 Discontinued part		2	
23	900 025 007 03	Washer A 8,4		2	
24	928 111 261 02	Hooks		4	
25	900 075 087 02	Hexagon bolt M 8 X 16 Discontinued part		6	
25	900 075 087 03	Hexagon bolt M 8 X 16		6	
25	900 075 087 04	Hexagon bolt M 8 X 16	M8X16 yellow	6	
26	928 111 259 02	Rubber bush		3	
(27)	928 111 031 04	Silencer D - MJ 1979>> - MJ 1979 also use:	 00004300400	1 1	

Model	Year	MG	SG	Illustration	Restrictions	UPD	7:04	27.10.2023
928	1978	2	02	202-005		738		

Pos	Part Number	Description	Remark	Qty	Model
27	928 111 931 00	Silencer D - MJ 1980>> - MJ 1982 also use:	 00004300400	1 1	
28	928 111 135 01	Seal D >> - MJ 1979		1	
29	928 111 264 01	Hooks		4	
30	928 111 257 01	Bracket		1	
31	928 111 242 01	Guard plate		1	
32	N 010 375 4	Hexagon bolt M 8 X 75		1	
33	999 507 326 02	Cage nut		X	
34	N 011 524 7	Washer A 6,4 Discontinued part		1	
34	N 011 524 27	Washer A 6,4		1	
35	N 011 666 7	Washer		X	
36	900 075 057 02	Hexagon bolt M 6 X 16		X	
36	900 075 057 03	Hexagon bolt M 6 X 16 No longer use the part here		X	
37	928 111 271 01	Trim for exhaust tail pipe		2	
38	900 075 001 07	Hexagon bolt M 5 X 8 D >> - MJ 1979		2	
39	928 111 955 00	Sleeve D - MJ 1980>>		1	

Model	Year	MG	SG	Illustration	Restrictions	UPD	7:04	27.10.2023
928	1978	2	02	202-010		738		

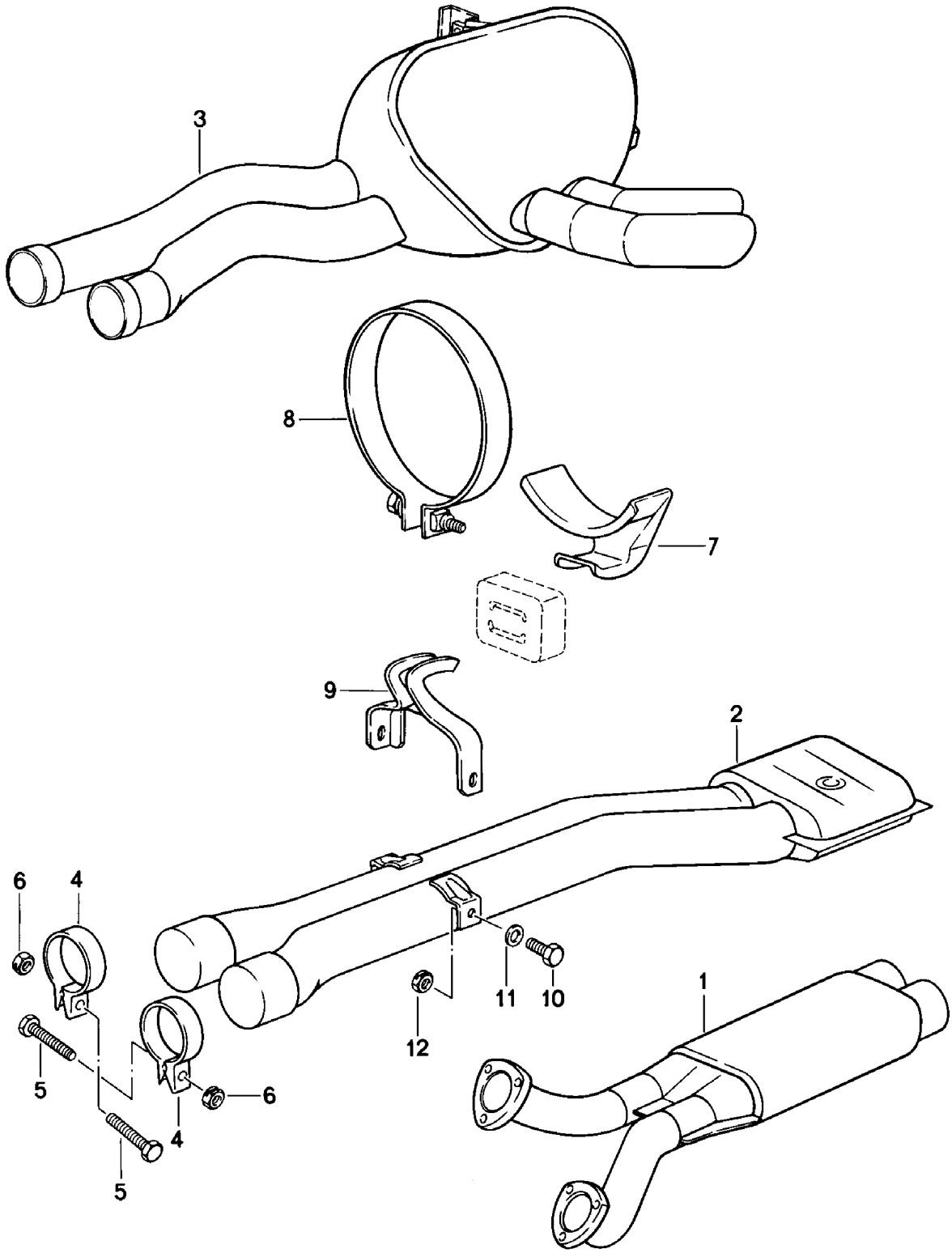

Model	Year	MG	SG	Illustration	Restrictions	UPD	7:04	27.10.2023
928	1978	2	02	202-010		738		

Pos	Part Number	Description	Remark	Qty	Model
		exhaust system **Dual tailpipe**			**2811,2812**
1	**928 111 096 03**	**Front silencer**		**1**	
		also use:	**00004300400**	**1**	
2	**928 111 935 00**	**Centre silencer**		**1**	
		also use:	**00004300400**	**1**	
3	**928 111 933 00**	**Silencer**		**1**	
		also use:	**00004300400**	**1**	
4	**928 111 424 00**	**Clamp**		**2**	
5	**900 155 036 02**	**Hexagon bolt** **M 10 X 50**		**2**	
6	**999 084 047 02**	**Locknut**		**4**	
7	**928 111 278 00**	**Hooks**	**upper**	**1**	
8	**999 512 325 02**	**Clip**		**1**	
9	**928 111 279 00**	**Hooks**	**lower**	**1**	
10	**900 075 318 02**	**Hexagon bolt** **M 8 X 16**		**2**	
11	**999 025 078 02**	**Washer**		**2**	
12	**999 084 052 02**	**Locknut** **M 8**		**2**	

Model	Year	MG	SG	Illustration	Restrictions	UPD	7:05	27.10.2023
928	1978	2	98	298-005		738		

Model	Year	MG	SG	Illustration	Restrictions	UPD	7:05	27.10.2023
928	1978	2	98	298-005		738		

Pos	Part Number	Description	Remark	Qty	Model
		Porsche Classic Additive for fuel			
1	**000 044 206 02**	**Additive for fuel Observe the safety data sheet.**	**All countries, not USA, Canada, Mexico**	**1**	

Model	Year	MG	SG	Illustration	Restrictions	UPD	7:05	27.10.2023
928	1978	3	01	301-000		738		

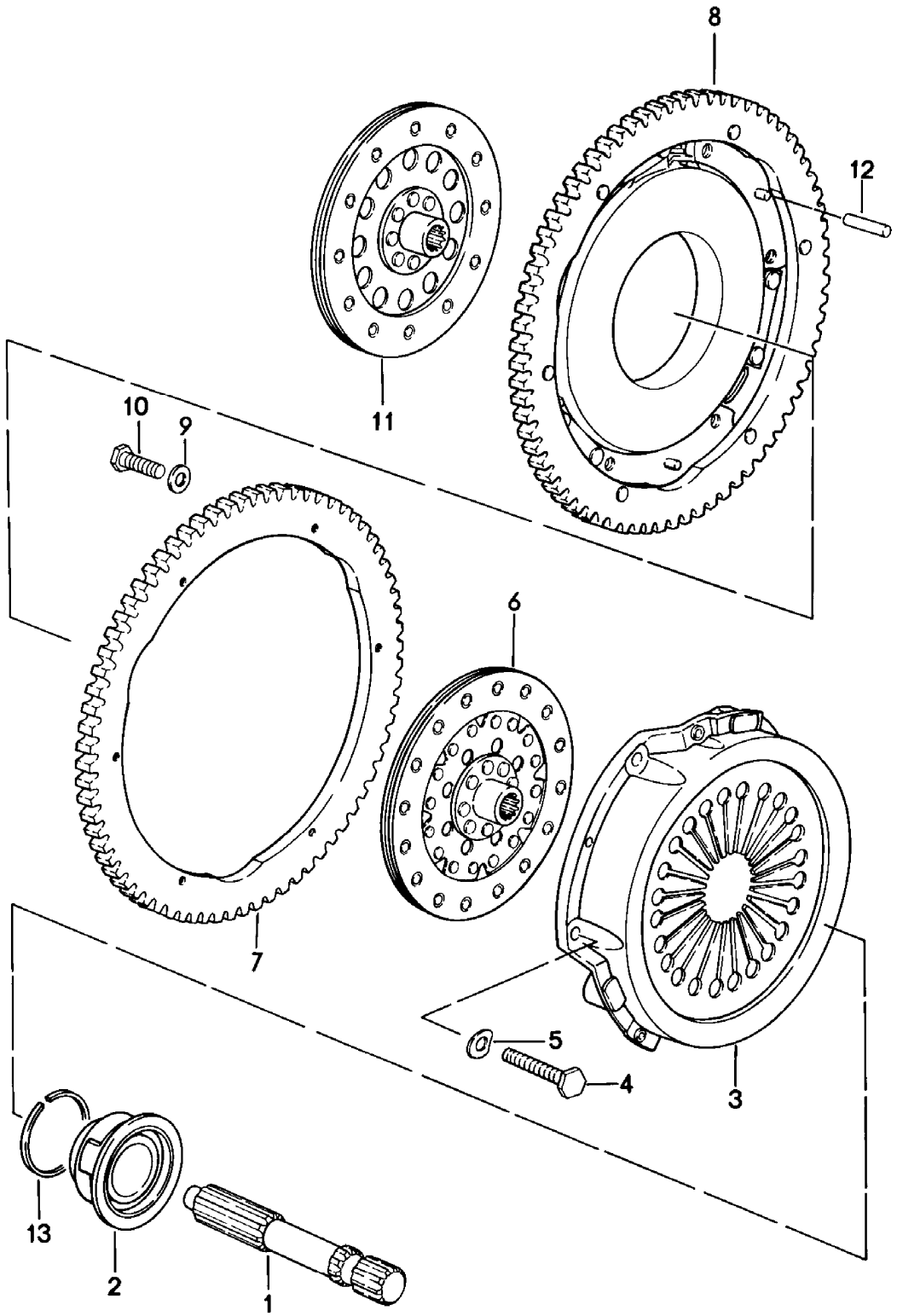

Model	Year	MG	SG	Illustration	Restrictions	UPD	7:05	27.10.2023
928	1978	3	01	301-000		738		

Pos	Part Number	Description	Remark	Qty	Model
		Coupling			
-		**See technical information GRP. 3 NR.3-4-12**			
1	928 421 235 11	**shaft 1 F >> 92-88100 753 F >> 92-88200 054 F >> 92-88209 522**		1	
1	928 421 235 16	**shaft 1 F 92-88100 754>> F 92-88200 055>> F 92-88209 523>> Discontinued part**		1	
1	928 421 235 17	**shaft 1 F 92-88100 754>> F 92-88200 055>> F 92-88209 523>>**		1	
2	928 116 085 24	**release bearing Discontinued part**		1	
2	928 116 085 25	**release bearing**		1	
3	928 116 031 03	**Pressure plate D >> - MJ 1979**		1	
(3)	928 116 031 26	**Pressure plate D - MJ 1980>> Discontinued part**		1	
(3)	928 116 031 27	**Pressure plate D - MJ 1980>>**		1	
4	N 010 340 6	**Hexagon bolt M 8 X 40**		6	
5	N 012 241 8	**Spring washer**		6	
6	928 116 011 24	**Clutch plate 2 D >> - MJ 1979 Discontinued part**		1	
6	928 116 011 36	**Clutch plate 2 only in conj. with: 928.116.011.35**		1	
6	928 116 011 28	**Clutch plate 2 D - MJ 1980>>**		1	
7	928 116 143 00	**Crown gear D >> - MJ 1979**		1	

Model	Year	MG	SG	Illustration	Restrictions	UPD	7:05	27.10.2023
928	1978	3	01	301-000		738		

Pos	Part Number	Description	Remark	Qty	Model
8	928 116 033 22	Intermediate ring Discontinued part		1	
(8)	928 116 033 03	Intermediate ring Discontinued part		1	
(8)	928 116 033 26	Intermediate ring		1	
9	N 012 234 3	Spring washer B 7 D >> - MJ 1979		6	
10	N 010 229 2	Hexagon bolt M 7 X 18 D >> - MJ 1979		6	
11	928 116 011 23	Clutch plate 1 D >> - MJ 1979 Discontinued part		1	
11	928 116 011 35	Clutch plate 1 only in conj. with: 928.116.011.36		1	
11	928 116 011 27	Clutch plate 1 D - MJ 1980>>		1	
12	999 012 030 00	Cylinder pin D - MJ 1980>>		3	
13	999 152 068 01	snap ring for release bearing		1	
-	928 116 911 00	repair set for Coupling D - MJ 1980>>		1	

Model	Year	MG	SG	Illustration	Restrictions	UPD	7:05	27.10.2023
928	1978	3	01	301-005		738		

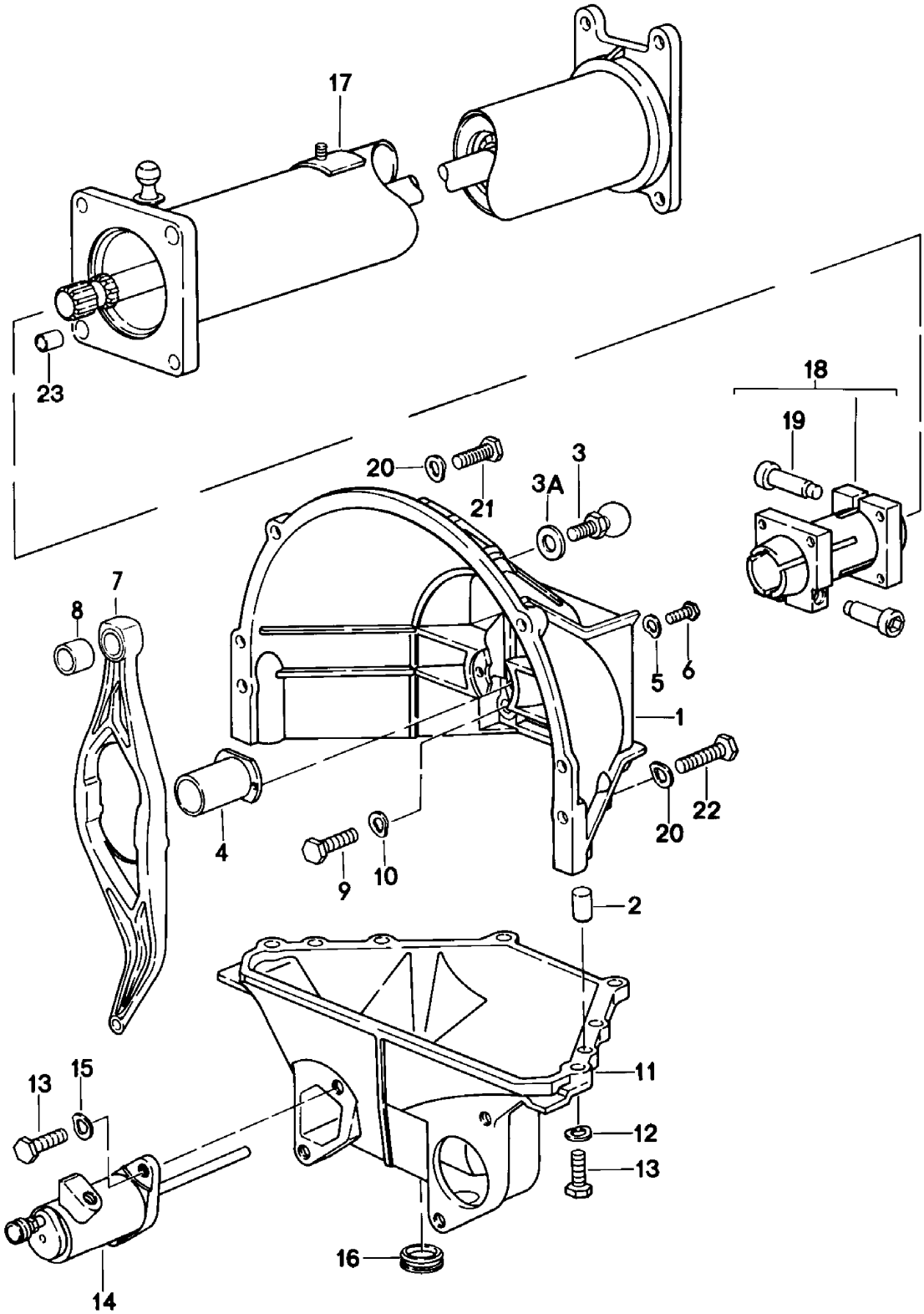

Model	Year	MG	SG	Illustration	Restrictions	UPD	7:05	27.10.2023
928	1978	3	01	301-005		738		

Pos	Part Number	Description	Remark	Qty	Model
		Central pipe with cent. shaft Manual gearbox			
1	928 116 401 11	clutch housing Discontinued part		1	
1	928 116 402 00	clutch housing		1	
2	900 012 110 00	Cylinder pin		2	
3	928 116 075 01	Ball stud Discontinued part		1	
3	928 116 075 02	Ball stud		1	
3A	900 025 007 02	Washer Discontinued part		1	
3A	900 025 007 03	Washer		1	
4	928 116 087 13	guide tube		1	
5	N 012 226 5	Spring washer		2	
6	900 075 057 02	Hexagon bolt M 6 X 16		2	
6	900 075 057 03	Hexagon bolt M 6 X 16 No longer use the part here		2	
7	928 116 832 06	clutch operating lever		1	
8	928 116 145 03	Mounting for ball socket		1	
9	900 074 059 02	Hexagon bolt M 10 X 40 D >> - MJ 1979		4	
9	900 074 379 01	Hexagon bolt M 10 X 40		4	
(9)	N 010 445 2	Hexagon bolt D - MJ 1980>> Discontinued part		4	
(9)	900 074 372 01	Hexagon bolt D - MJ 1980>>		4	
10	N 012 230 1	Spring washer		4	
11	928 116 411 12	Cover for clutch housing		1	
12	N 012 241 8	Spring washer		6	
13	900 075 099 02	Hexagon bolt M 8 X 30 Discontinued part		8	

Model	Year	MG	SG	Illustration	Restrictions	UPD	7:05	27.10.2023
928	1978	3	01	301-005		738		

Pos	Part Number	Description	Remark	Qty	Model
13	900 075 099 03	Hexagon bolt M 8 X 30		8	
14	928 116 237 18	Clutch slave cylinder		1	
-	928 116 901 00	repair set Clutch slave cylinder		1	
15	900 027 015 02	spring ring B 8		2	
15	900 027 015 03	spring ring B 8		2	
16	928 116 425 00	Cap D >> - MJ 1980		2	
(16)	477 521 177	Cap D - MJ 1980>>		1	
16	928 116 425 00	Cap D - MJ 1981>>		3	
17	928 421 012 13	Central pipe with cent. shaft F >> 92-88100 753 F >> 92-88200 054 F >> 92-88209 522		1	G2803
-		also use:	928 421 235 16 922 421 051 01		
(17)	928 421 012 14	Central pipe with cent. shaft D >> - MJ 1980		1	G2803
(17)	928 421 012 18	Central pipe with cent. shaft D - MJ 1980>> - MJ 1980 Discontinued part		1	G2805
17	928 421 012 26	Central pipe with cent. shaft D - MJ 1980>>		1	G2805
17	928 421 012 DX	Central pipe with cent. shaft D - MJ 1980>>		1	G2805
18	928 421 051 02	Clamping sleeve F >> 92-88100 753 F >> 92-88200 054 F >> 92-88209 522		1	
18	922 421 051 02	Clamping sleeve F 92-88100 754>> F 92-88100 055>> F 92-88209 523>> Discontinued part		1	
18	922 421 051 03	Clamping sleeve F 92-88100 754>> F 92-88100 055>> F 92-88209 523>>		1	

Model	Year	MG	SG	Illustration	Restrictions	UPD	7:05	27.10.2023
928	1978	3	01	301-005		738		

Pos	Part Number	Description	Remark	Qty	Model
19	931 421 240 00	Fastening screw F >> 92-88100 753 F >> 92-88200 054 F >> 92-88209 522		2	
19	931 421 240 00	Fastening screw F 92-88100 754>> F 92-88200 055>> F 92-88209 523>>		2	
20	N 012 232 1	Spring washer		4	
21	N 010 142 2	Hexagon bolt M 12 X 50		4	
22	N 010 165 3	Hexagon bolt M 12 X 65		2	
22	900 082 109 01	Hexagon bolt M 12 X 65		2	
23	900 197 042 01	spring pin 10 X 12		2	

Model	Year	MG	SG	Illustration	Restrictions	UPD	7:06	27.10.2023
928	1978	3	02	302-000		738		

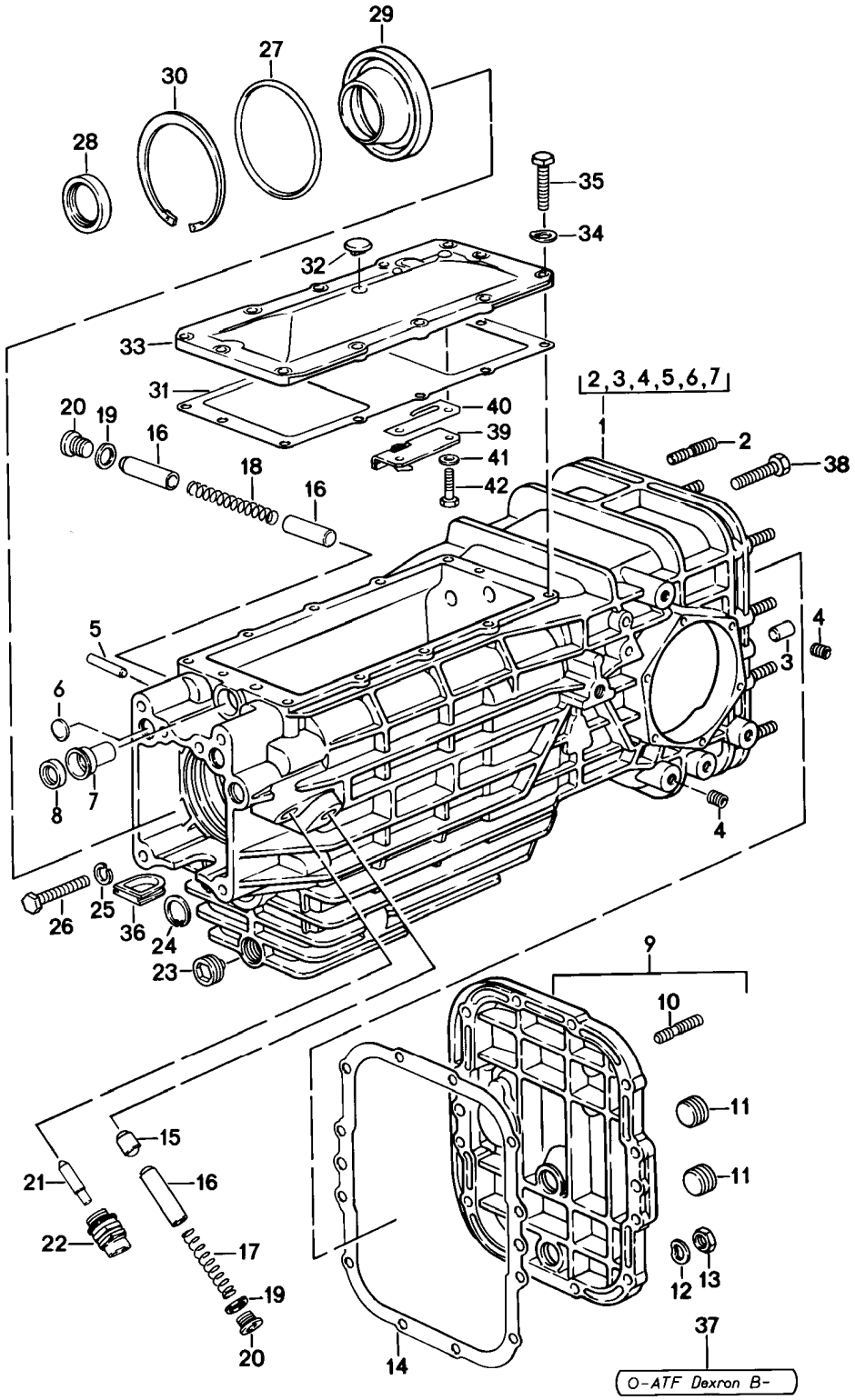

Model	Year	MG	SG	Illustration	Restrictions	UPD	7:06	27.10.2023
928	1978	3	02	302-000		738		

Pos	Part Number	Description	Remark	Qty	Model
		Manual gearbox Gear housing			
-	928 300 005 03	Manual gearbox Ready for installation D >> - MJ 1980		1	G2803
-	928 300 005 05	Manual gearbox Ready for installation D - MJ 1980>>		1	G2805+ 2811,2809
-	928 300 905 03	Manual gearbox Ready for installation with: limited slip differential D >> - MJ 1980	40%	1	G2803
-	928 300 905 05	Manual gearbox Ready for installation with: limited slip differential D - MJ 1980>>	40%	1	G2805+ 2811,2809
1	928 301 901 00	Gear housing D >> - MJ 1979		1	
(1)	928 301 901 01	Gear housing D - MJ 1980>>		1	
-	PCG 043 210 52	Transmission fluid Porsche Classic 75W90 GL5 1 L		1	
-	PCG 043 210 12	Transmission fluid Porsche Classic 75W90 GL5 55L		1	
-	PCG 721 916 60	Filling pump for Transmission fluid	1000 ML	1	
2	999 062 007 02	Threaded pin 8 X 22 G >> 110 5012 Discontinued part		12	G2805
2	900 060 106 01	Threaded pin 8 X 22 G >> 110 5012		12	G2805
3	900 012 086 00	Cylinder pin		2	
4	999 504 004 00	threaded insert threaded insert		2	
5	900 302 009 00	Cylinder pin		1	

Model	Year	MG	SG	Illustration	Restrictions	UPD	7:06	27.10.2023
928	1978	3	02	302-000		738		

Pos	Part Number	Description	Remark	Qty	Model
6	900 040 013 02	Sealing washer		3	
7	928 301 502 00	guide bush		1	
8	928 303 120 01	Shaft oil seal		1	
9	928 301 035 04	Housing cover with: battery box With fixing parts		1	
9	928 301 305 09	Housing cover without: battery box	rear	1	
10	900 061 004 02	Threaded pin M 8 X 15		3	
11	999 064 019 02	sealing plug Hexagon socket head bolt without: Magnet		1	
11	999 064 019 0C	sealing plug Hexagon socket head bolt without: Magnet		1	
12	N 012 241 8	Spring washer		12	
13	900 076 025 02	Hexagon nut Discontinued part		12	
13	900 076 064 02	Hexagon nut		12	
14	928 301 395 03	Seal for Housing cover	rear	1	
15	928 303 231 21	locking piece		1	
16	928 303 233 22	Sliding bush		3	
17	928 303 235 20	Pressure spring		1	
18	928 303 237 20	Pressure spring		1	
19	900 123 043 30	seal ring		2	
20	900 219 006 02	sealing plug Discontinued part		2	
20	900 219 006 01	sealing plug		2	
21	928 606 241 02	Tappets		1	
22	914 613 541 02	Reverse light switch		1	
23	999 064 020 02	sealing plug Magnet		1	

Model	Year	MG	SG	Illustration	Restrictions	UPD	7:06	27.10.2023
928	1978	3	02	302-000		738		

Pos	Part Number	Description	Remark	Qty	Model
24	N 012 375 1	Securing ring		1	
25	900 027 016 02	spring ring B 10 Discontinued part		6	
25	900 027 016 03	spring ring B 10		6	
26	900 075 266 01	Hexagon bolt M 10 X 45		6	
27	928 301 111 00	O-ring		1	
27	928 301 111 01	O-ring		1	
28	928 302 167 03	Shaft oil seal Discontinued part		1	
28	928 302 167 05	Shaft oil seal		1	
29	928 302 175 11	Bearing cover		1	
30	900 042 052 01	Securing ring		1	
31	928 301 393 06	Seal for Housing cover	upper	1	
32	928 301 311 01	breather assy.		1	
33	928 301 303 06	Housing cover D >> - MJ 1981	upper	1	
33	928 301 303 09	Housing cover D - MJ 1982>> - MJ 1982	upper	1	
34	900 028 008 01	spring ring		12	
35	900 075 016 02	Hexagon bolt M 6 X 22 Discontinued part		12	
35	900 075 016 03	Hexagon bolt M 6 X 22		12	
36	928 301 171 00	Cap		1	
37	928 006 515 00	flag "ATF DEXRON"		X	
38	900 075 099 02	Hexagon bolt M 8 X 30 G 110 5012 >> Discontinued part		12	G2805
38	900 075 099 03	Hexagon bolt M 8 X 30 G 110 5012 >>		12	G2805

Model	Year	MG	SG	Illustration	Restrictions	UPD	7:06	27.10.2023
928	1978	3	02	302-000		738		

Pos	Part Number	Description	Remark	Qty	Model
39	928 303 025 05	plunger for inter lock D - MJ 1982>> - MJ 1982 Discontinued part	Reverse gear	1	
39	928 303 025 06	plunger for inter lock D - MJ 1982>>	Reverse gear	1	
40	928 303 287 01	leaf spring D - MJ 1982>> - MJ 1982		1	
41	N 012 226 5	Spring washer D - MJ 1982>> - MJ 1982		2	
42	900 075 057 02	Hexagon bolt M 6 X 16 D - MJ 1982>> - MJ 1982		2	
42	900 075 057 03	Hexagon bolt M 6 X 16 D - MJ 1982>> No longer use the part here		2	

Model	Year	MG	SG	Illustration	Restrictions	UPD	7:06	27.10.2023
928	1978	3	03	303-000		738		

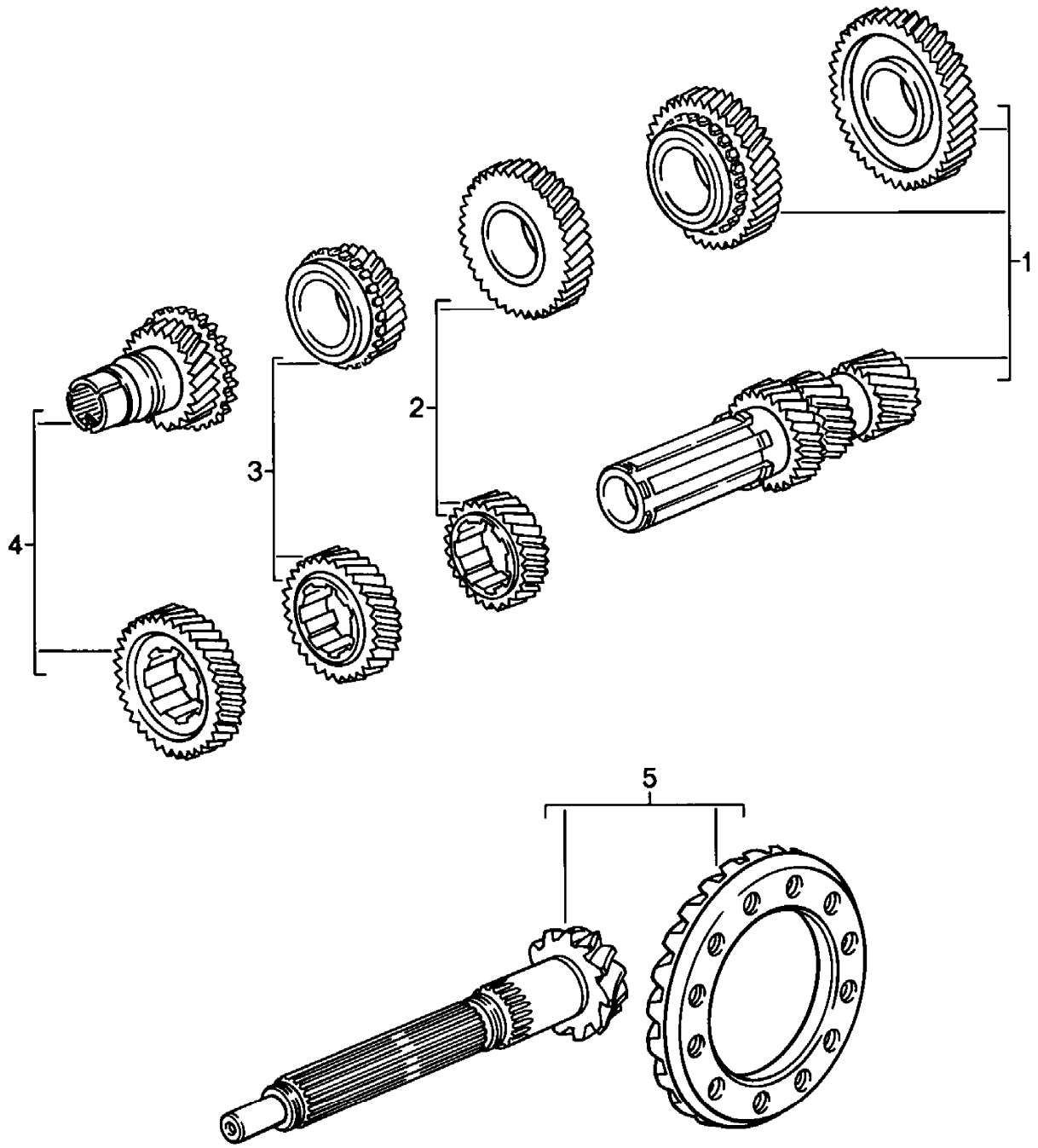

Model	Year	MG	SG	Illustration	Restrictions	UPD	7:06	27.10.2023
928	1978	3	03	303-000		738		

Pos	Part Number	Description	Remark	Qty	Model
		gear set Manual gearbox			
-		for G28.03			
1	928 302 901 13	gear set Z = 17:44 Z = 22:39 also use:	1./2.gear 999 152 087 01 928 302 278 00	1	
2	928 302 903 11	gear set Z = 26:34	3.gear	1	
3	928 302 904 11	gear set Z = 29:28	4-speed	1	
4	928 302 905 08	gear set Z = 32:23	5-speed	1	
5	928 302 911 26	pinion gear set 11:30		1	
-		for G28.05			
1	928 302 901 13	gear set Z = 17:44 Z = 22:39 also use:	1./2.gear 999 152 087 01 928 302 278 00	1	
2	928 302 903 11	gear set Z = 26:34	3.gear	1	
3	928 302 904 11	gear set Z = 29:28	4-speed	1	
4	928 302 905 09	gear set Z = 32:23	5-speed	1	
5	928 302 911 26	pinion gear set 11:30		1	

Model	Year	MG	SG	Illustration	Restrictions	UPD	7:06	27.10.2023
928	1978	3	03	303-005		738		

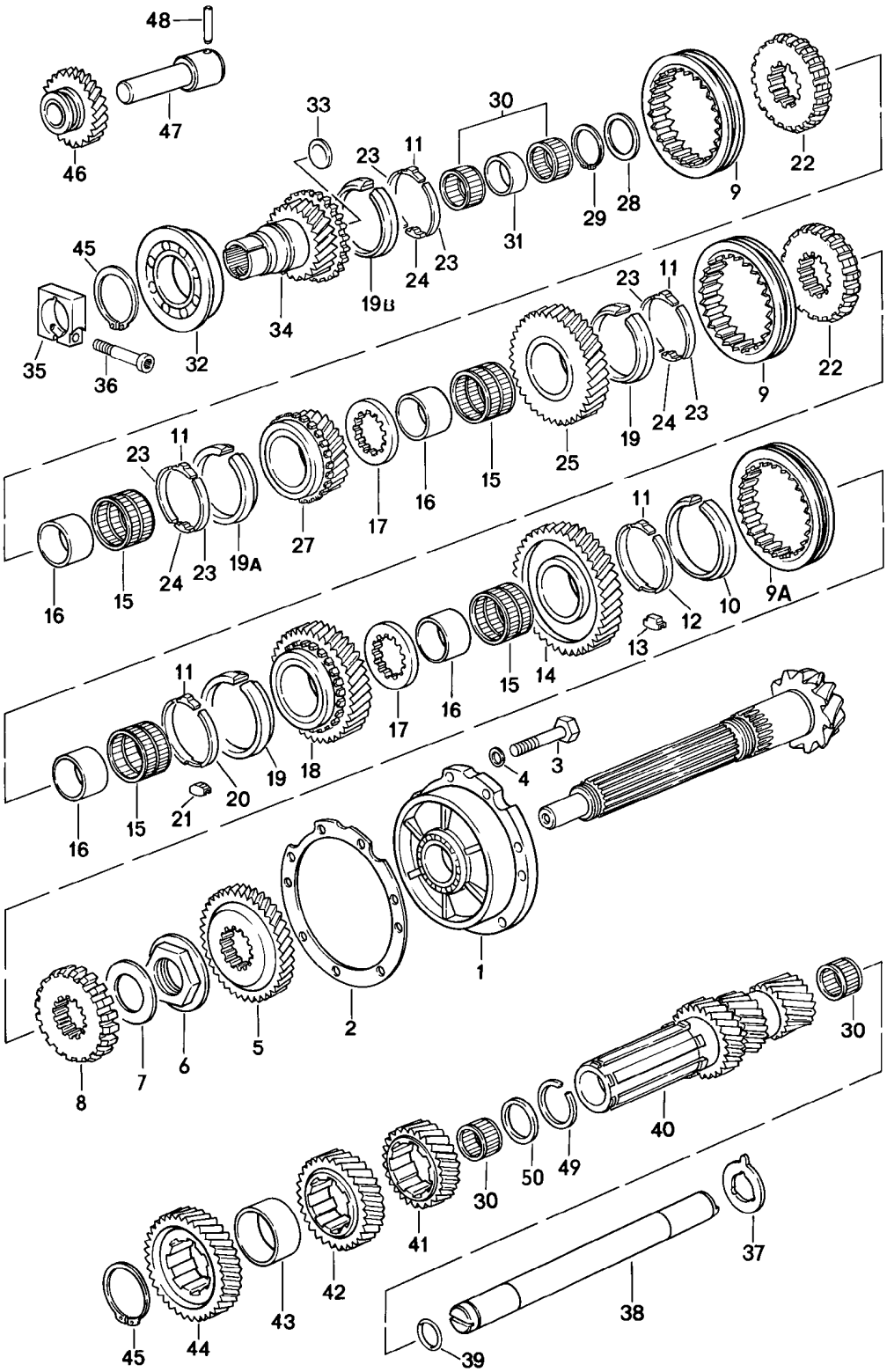

Model	Year	MG	SG	Illustration	Restrictions	UPD	7:06	27.10.2023
928	1978	3	03	303-005		738		

Pos	Part Number	Description	Remark	Qty	Model
		gears and shafts Manual gearbox			
-		shaft			
1	928 302 063 29	Bearing cover with: Mounting		1	
2	928 302 298 10	adjusting washer 0,10 MM		X	
(2)	928 302 298 11	adjusting washer 0,15 MM		X	
(2)	928 302 298 12	adjusting washer 0,20 MM		X	
(2)	928 302 298 13	adjusting washer 0,50 MM		X	
3	N 010 244 6	Hexagon bolt 8 X 30		7	
4	999 523 102 02	Toothed washer 8 MM Discontinued part		7	
4	999 523 102 0B	Toothed washer 8 MM		7	
5	928 302 305 08	Fixed gear wheel for also use: change gear 928.302.026.08	Reverse gear	1	
6	928 302 266 06	Locknut 42 X 1,5		1	
7	928 302 289 00	compensation washer 0,60 MM		X	
(7)	928 302 289 01	compensation washer 0,65 MM		X	
(7)	928 302 289 02	compensation washer 0,70 MM		X	
(7)	928 302 289 03	compensation washer 0,75 MM		X	
(7)	928 302 289 04	compensation washer 0,95 MM		X	
(7)	928 302 289 05	compensation washer 1,10 MM		X	
8	928 302 401 21	synchronizing hub		1	

Model	Year	MG	SG	Illustration	Restrictions	UPD	7:06	27.10.2023
928	1978	3	03	303-005		738		

Pos	Part Number	Description	Remark	Qty	Model
9	928 302 413 11	Shift collar		2	
9A	928 302 413 11	Shift collar G >> 11C 1343		1	
9A	928 302 411 01	Shift collar G 11C 1344 >>		1	
10	928 302 301 31	synchronizer ring	1.gear	1	
11	915 302 315 01	thrust piece		5	
12	928 302 319 05	Double barricade tape		1	
12	928 302 319 09	Double barricade tape		1	
13	928 302 321 00	Stop	1.gear	1	
14		Loose gear wheel	1.gear	1	
15	928 302 158 02	Needle cage		4	
16	928 302 271 01	inner ring		4	
17	928 302 267 01	thrust washer		2	
18		Loose gear wheel	2.gear	1	
19	928 302 302 31	synchronizer ring	2nd/3rd gear	2	
19A	928 302 302 33	synchronizer ring	4-speed	1	
(19B)	928 302 302 33	synchronizer ring G >> 118 1092	5-speed	1	
19B	928 302 304 31	synchronizer ring G 118 1093 >> Discontinued part	5-speed	1	
19B	928 302 304 31	synchronizer ring	5-speed	1	
20	928 302 318 01	Double barricade tape	2.gear	1	
21	928 302 320 01	Stop	2.gear	1	
22	928 302 402 01	synchronizing hub		2	
23	915 302 316 01	Double barricade tape		6	
24	928 302 327 00	Stop		3	
25		Loose gear wheel	3.gear	1	
27		Loose gear wheel	4-speed	1	
-		only for position: 28 / 29 G >> 11C 1017			G2805
28	928 302 290 00	compensation washer 0,85 MM		X	

Model	Year	MG	SG	Illustration	Restrictions	UPD	7:06	27.10.2023
928	1978	3	03	303-005		738		

Pos	Part Number	Description	Remark	Qty	Model
(28)	928 302 290 01	compensation washer 0,90 MM		X	
(28)	928 302 290 02	compensation washer 0,95 MM		X	
(28)	928 302 290 03	compensation washer 1,00 MM		X	
(28)	928 302 290 04	compensation washer 1,20 MM		X	
(28)	928 302 290 05	compensation washer 1,40 MM		X	
(28)	928 302 290 06	compensation washer 1,60 MM		X	
29	900 041 039 01	Securing ring 38 X 1,75		1	
-		only for position: 28 / 29 G 11C 1018 >>			G2805
28	928 302 290 14	compensation washer 0,85 MM		X	
(28)	928 302 290 15	compensation washer 0,90 MM		X	
(28)	928 302 290 16	compensation washer 0,95 MM		X	
(28)	928 302 290 17	compensation washer 1,00 MM		X	
(28)	928 302 290 18	compensation washer 1,20 MM		X	
(28)	928 302 290 19	compensation washer 1,40 MM		X	
(28)	928 302 290 20	compensation washer 1,60 MM		X	
29	999 041 036 01	Securing ring 37 X 1,75		1	
30	928 302 163 00	Needle cage		4	
31	928 302 165 01	thrust ring		1	
32	928 302 152 06	grooved ball bearing		1	
33	900 040 008 01	End cap		1	
34		Input shaft		1	
35	928 421 239 05	clamping piece Discontinued part		1	

Model	Year	MG	SG	Illustration	Restrictions	UPD	7:06	27.10.2023
928	1978	3	03	303-005		738		

Pos	Part Number	Description	Remark	Qty	Model
35	922 421 239 02	clamping piece		1	
36	931 421 240 00	Fastening screw to use before: F >> 92-88100 753 F >> 92-88200 054 F >> 92-88209 522		1	
-		also use: POS. 35 / 36			
37	928 302 281 03	thrust washer		1	
38	928 302 036 00	reduction gearbox shaft Discontinued part		1	
39	928 302 283 00	O-ring		1	
40		shaft		1	
41		Fixed gear wheel	3.gear	1	
42		Fixed gear wheel	4-speed	1	
43	928 302 279 02	spacer sleeve		1	
44		Fixed gear wheel	5-speed	1	
45	900 041 019 01	Securing ring 50 X 2		2	
46	928 302 026 08	sliding wheel for reverse gear also use: Fixed gear wheel 928.302.305.08		1	
47	928 302 229 01	reverse gear idler spindle		1	
48	900 309 009 00	spring pin		1	
49	999 152 087 01	snap ring		1	
50	928 302 278 00	support washer		1	

Model	Year	MG	SG	Illustration	Restrictions	UPD	7:06	27.10.2023
928	1978	3	04	304-000		738		

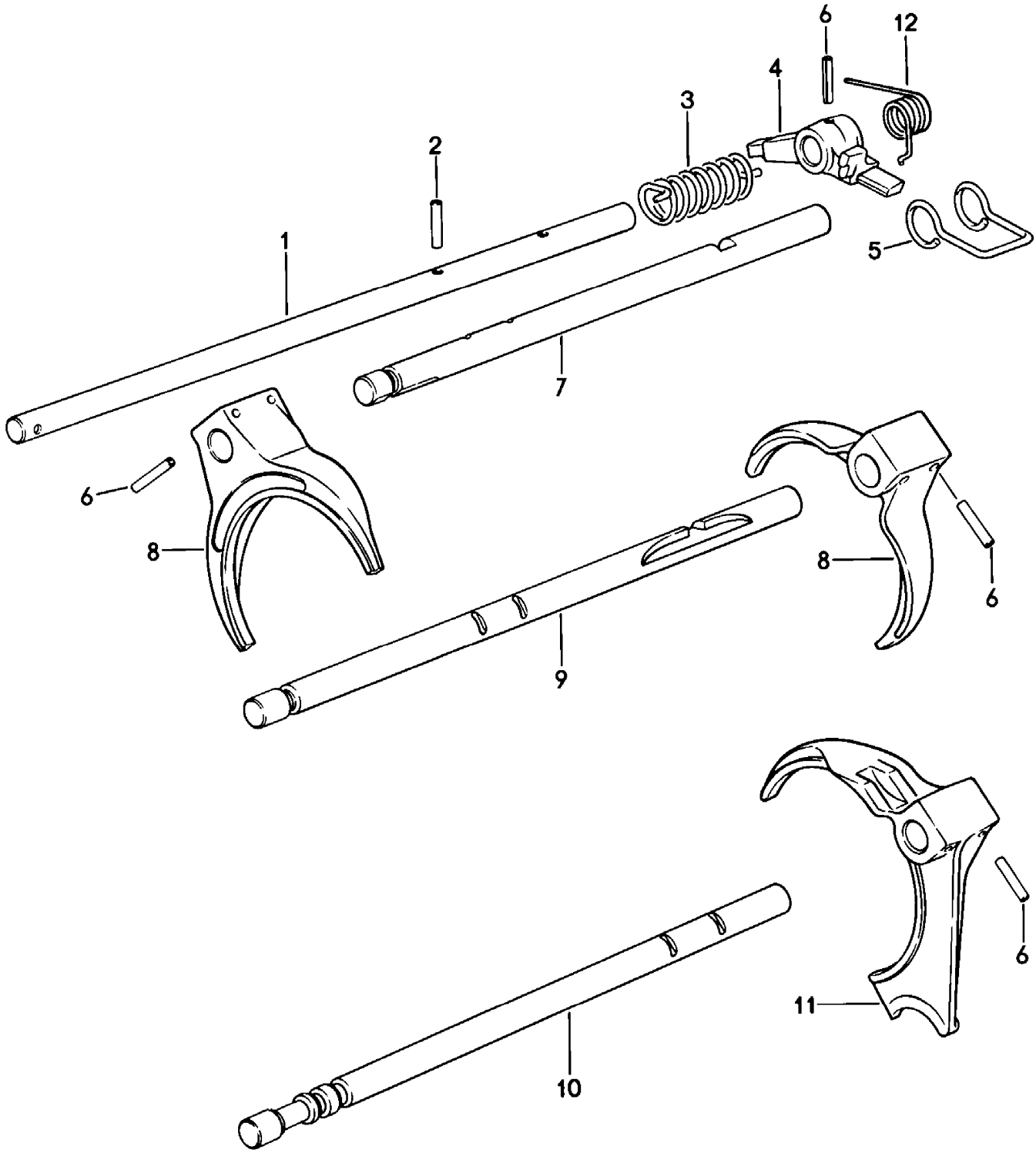

Model	Year	MG	SG	Illustration	Restrictions	UPD	7:06	27.10.2023
928	1978	3	04	304-000		738		

Pos	Part Number	Description	Remark	Qty	Model
		selector shaft **Selector fork** **Manual gearbox**			
1	**928 303 107 06**	**selector shaft**	**inner**	**1**	
2	**900 309 013 00**	**spring pin**		**1**	
3	**928 303 243 13**	**torsion spring**		**1**	
4	**928 303 117 08**	**shift finger**		**1**	
5	**928 303 244 00**	**arm**		**1**	
6	**N 013 317 1**	**spring pin**		**7**	
7	**928 303 102 27**	**selector shaft**	**4th/5th gear**	**1**	
8	**928 303 113 24**	**Selector fork**	**2nd/3rd gear** **4th/5th gear**	**2**	
9	**928 303 101 07**	**selector shaft**	**2nd/3rd gear**	**1**	
10	**928 303 105 20**	**selector shaft**	**1.and reverse gear**	**1**	
11	**928 303 115 36**	**Selector fork**	**1.and reverse gear**	**1**	
12	**928 303 284 15**	**torsion spring** **D - MJ 1982>> - MJ 1982**		**1**	

Model	Year	MG	SG	Illustration	Restrictions	UPD	7:07	27.10.2023
928	1978	3	05	305-000		738		

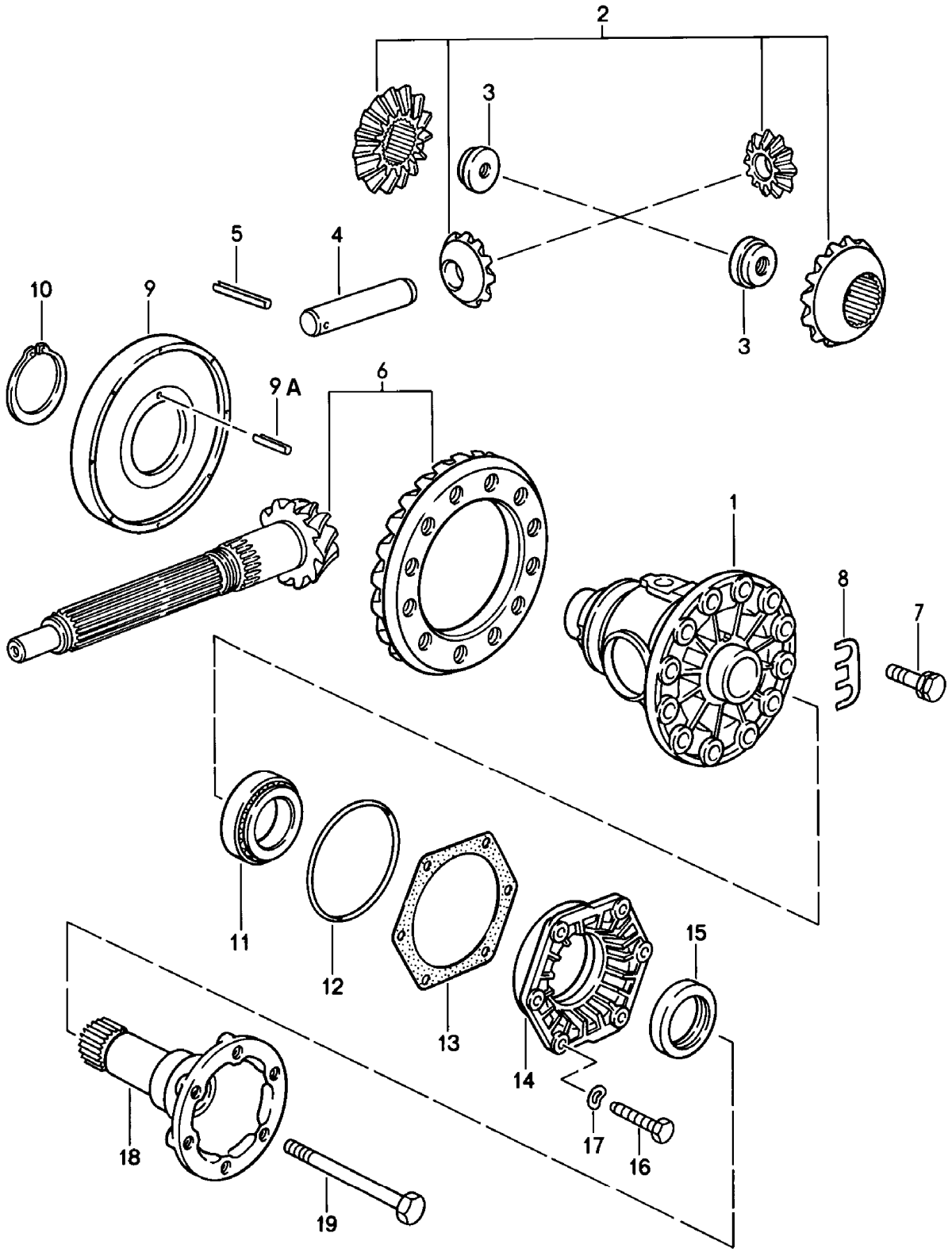

Model	Year	MG	SG	Illustration	Restrictions	UPD	7:07	27.10.2023
928	1978	3	05	305-000		738		

Pos	Part Number	Description	Remark	Qty	Model
		Differential Manual gearbox			
1	928 332 212 04	Differential housing		1	G2803,G2805
2	928 332 902 00	1 set: differential pinions G >> 111 1600		1	
2	928 332 902 01	1 set: differential pinions G 111 1601 >>		1	
2	928 332 902 90	1 set: differential pinions G 111 1601 >> Discontinued part		1	
2	950 332 902 90	1 set: differential pinions G 111 1601 >>		1	
3	928 332 279 02	Nut G >> 111 1600		2	
3	928 332 279 02	Nut G 111 1601 >>		2	
4	005 409 177 00	Pin G >> 111 1600		1	
4	928 332 207 05	Pin 21 MM G 111 1601 >>		1	
5	900 309 035 00	spring pin 5 X 40		1	
6	928 302 911 26	pinion gear set 12 : 33		1	
7	928 332 276 00	Hexagon bolt		12	
8	928 332 285 00	Retaining plate		6	
9	928 318 024 02	impulse rotor Discontinued part		1	
9	928 318 024 02	impulse rotor		1	
9A	900 309 020 00	Pin 5 X 20		1	
10	999 152 089 01	snap ring		1	
11	999 059 027 00	Taper roller bearing Discontinued part		2	
11	999 059 027 02	Taper roller bearing		2	
12	928 332 217 02	O-ring		2	
13	928 332 219 00	adjusting washer 0,15 MM		X	

Model	Year	MG	SG	Illustration	Restrictions	UPD	7:07	27.10.2023
928	1978	3	05	305-000		738		

Pos	Part Number	Description	Remark	Qty	Model
(13)	928 332 219 01	adjusting washer 0,20 MM		X	
(13)	928 332 219 02	adjusting washer 0,25 MM		X	
(13)	928 332 219 03	adjusting washer 0,30 MM		X	
(13)	928 332 219 04	adjusting washer 0,10 MM		X	
14	928 332 213 02	Bearing cover		2	
15	928 332 215 02	Shaft oil seal		2	
16	900 075 099 02	Hexagon bolt Discontinued part		12	
16	900 075 099 03	Hexagon bolt		12	
17	N 012 241 8	Spring washer		12	
18	928 332 206 00	Drive flange		2	
19	900 074 292 02	Hexagon bolt M 10 X 100 D >> - MJ 1980 Discontinued part		2	
19	900 074 292 02	Hexagon bolt M 10 X 98 D - MJ 1981>>		2	

Model	Year	MG	SG	Illustration	Restrictions	UPD	7:07	27.10.2023
928	1978	3	05	305-005		738		

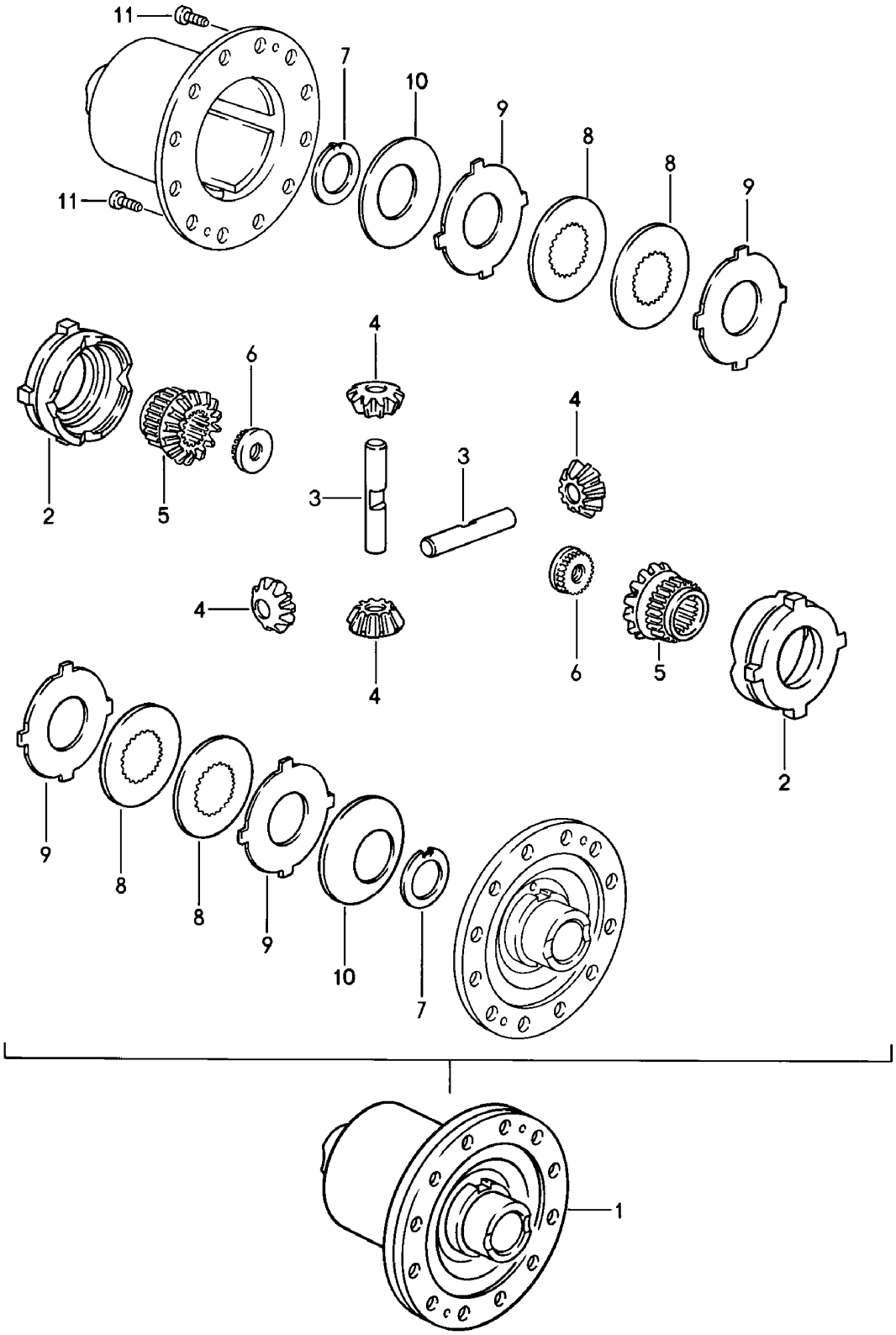

Model	Year	MG	SG	Illustration	Restrictions	UPD	7:07	27.10.2023
928	1978	3	05	305-005		738		

Pos	Part Number	Description	Remark	Qty	Model
		limited slip differential Manual gearbox			
1	**928 332 052 04**	**limited slip differential**		**1**	
2	**928 332 511 00**	**spressure ring**		**2**	
3	**928 332 541 00**	**shaft - differential pinion**		**2**	
4	**928 332 531 00**	**pinion**		**4**	
5	**928 332 535 00**	**Bevel gear**		**2**	
6	**928 332 279 01**	**threaded insert**		**2**	
7	**901 332 561 11**	**thrust washer**		**2**	
8	**928 332 551 00**	**Internal disc 2,0 MM**		**2**	
9	**917 332 552 10**	**external disc 1,9 MM**		**6**	
9	**917 332 552 11**	**external disc 2,0 MM**		**X**	
9	**917 332 552 12**	**external disc 2,1MM**		**X**	
10	**928 332 555 00**	**Belleville spring**		**2**	
11	**900 119 002 00**	**Socket head bolt M 6 X 10**		**2**	

Model	Year	MG	SG	Illustration	Restrictions	UPD	7:07	27.10.2023
928	1978	3	06	306-000		738		

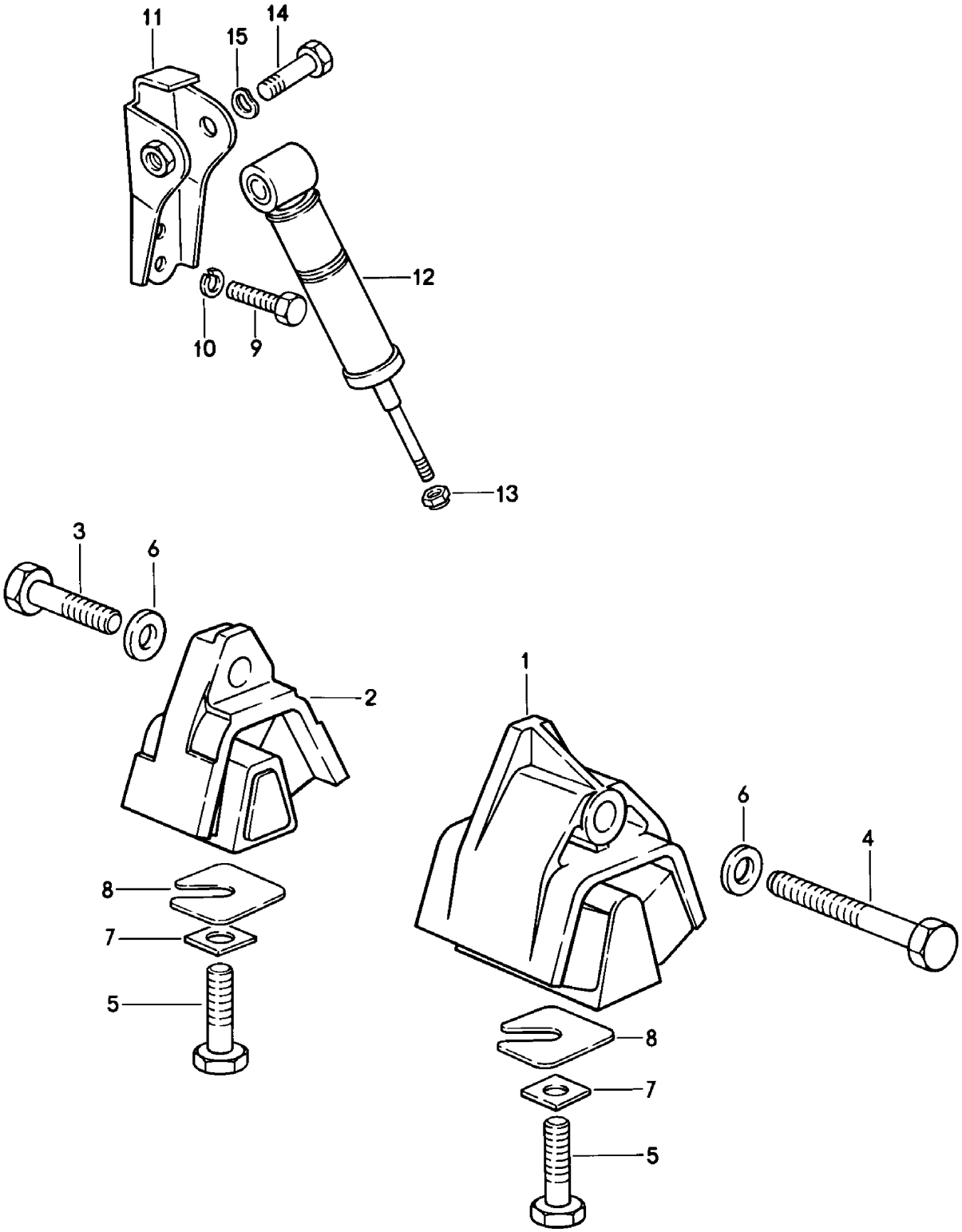

Model	Year	MG	SG	Illustration	Restrictions	UPD	7:07	27.10.2023
928	1978	3	06	306-000		738		

Pos	Part Number	Description	Remark	Qty	Model
		gearbox mounting Manual gearbox			
1	928 375 045 13	gearbox mounting D >> - MJ 1978	left	1	
2	928 375 046 13	gearbox mounting D >> - MJ 1978	right	1	
(2)	928 375 045 16	gearbox mounting D >> - MJ 1979		2	
(2)	928 375 045 16	gearbox mounting D - MJ 1980>>		2	
3	N 010 142 2	Hexagon bolt M 12 X 1,5 X 50 D >> - MJ 1978		1	
(3)	N 010 142 2	Hexagon bolt M 12 X 1,5 X 50 D - MJ 1979>>		2	
4	900 082 020 09	Hexagon bolt M 12 X 1,5 X 80 D >> - MJ 1978		1	
4	900 082 020 03	Hexagon bolt M 12 X 1,5 X 80		1	
5	N 040 108 1	Hexagon bolt M 12 X 1,5 X 40		2	
6	901 333 143 01	Washer		2	
7	928 375 331 00	square washer		2	
8	928 331 520 01	Washer D - MJ 1980>>		X	
(8)	928 331 520 02	Washer D - MJ 1980>>		X	
(8)	928 331 520 03	Washer D - MJ 1980>>		X	
(8)	928 331 520 04	Washer D - MJ 1980>>		X	
9	900 075 085 02	Hexagon bolt M 8 X 20		4	
10	900 027 015 02	spring ring B 8		4	
10	900 027 015 03	spring ring B 8		4	
11	928 375 085 00	mounting for shock absorber	left	1	
(11)	928 375 086 00	mounting for shock absorber	right	1	

Model	Year	MG	SG	Illustration	Restrictions	UPD	7:07	27.10.2023
928	1978	3	06	306-000		738		

Pos	Part Number	Description	Remark	Qty	Model
12	928 375 177 01	vibration damper		2	
13	900 910 010 02	Locknut		2	
14	900 074 130 02	Hexagon bolt M 8X40 Discontinued part		2	
14	900 075 033 02	Threaded pin M 8X40 Discontinued part		2	
14	900 075 033 03	Threaded pin M 8X40		2	
15	N 012 241 8	Spring washer B 8		2	

Model	Year	MG	SG	Illustration	Restrictions	UPD	7:08	27.10.2023
928	1978	3	07	307-000		738		

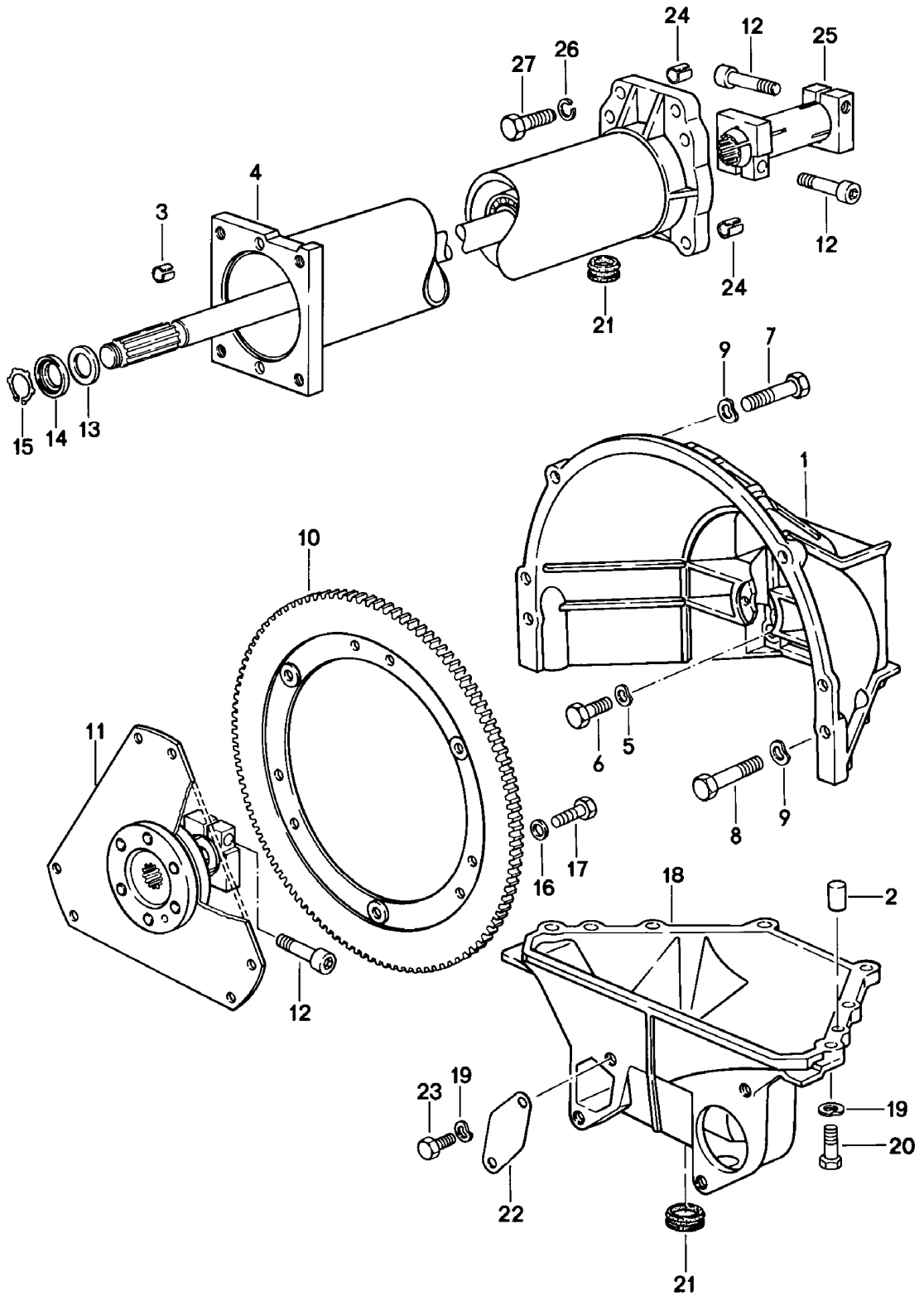

Model	Year	MG	SG	Illustration	Restrictions	UPD	7:08	27.10.2023
928	1978	3	07	307-000		738		

Pos	Part Number	Description	Remark	Qty	Model
		Central pipe with cent. shaft Automatic gearbox			
1	928 116 401 11	clutch housing Discontinued part		1	
1	928 116 402 00	clutch housing		1	
2	900 012 110 00	Cylinder pin		2	
3	900 197 042 01	spring pin 10 X 12		2	
4	922 421 012 03	Central pipe with cent. shaft Ready for installation See technical information GRP.3 NR.9		1	
5	N 012 230 1	Spring washer		4	
6	900 074 059 02	Hexagon bolt M 10 X 40		4	
6	900 074 379 01	Hexagon bolt M 10 X 40		4	
7	N 010 142 2	Hexagon bolt M 12 X 1,5 X 50		2	
8	N 010 165 3	Hexagon bolt M 12 X 1,5 X 65		2	
8	900 082 109 01	Hexagon bolt M 12 X 1,5 X 65		2	
9	N 012 232 1	Spring washer		4	
10	922 116 025 00	Crown gear		1	
11	922 116 041 03	Clutch plate		1	
12	931 421 240 00	Fastening screw		3	
13	900 234 116 02	fitted washer 22 X 32 X 0,5		X	
(13)	900 234 117 02	fitted washer 22 X 32 X 1,0		X	
(13)	900 234 118 02	fitted washer 22 X 32 X 0,2		X	
14	922 421 257 00	bush		1	
15	900 273 003 01	Securing ring		1	
16	999 523 102 02	Toothed washer Discontinued part		9	
16	999 523 102 0B	Toothed washer		9	

Model	Year	MG	SG	Illustration	Restrictions	UPD	7:08	27.10.2023
928	1978	3	07	307-000		738		

Pos	Part Number	Description	Remark	Qty	Model
17	900 075 280 01	Hexagon bolt M 8 X 18		9	
18	928 116 411 12	Cover for clutch housing		1	
19	N 012 241 8	Spring washer		8	
20	900 075 099 02	Hexagon bolt M 8 X 30 Discontinued part		6	
20	900 075 099 03	Hexagon bolt M 8 X 30		6	
21	928 116 425 00	Cap		2	
22	922 116 121 00	Cover plate		1	
23	N 010 237 6	Hexagon bolt M 8 X 12 Discontinued part		2	
23	N 010 237 14	Hexagon bolt M 8 X 12		2	
24	900 197 040 01	spring pin 13 X 16		2	
25	922 421 051 02	Clamping sleeve Discontinued part		1	
25	922 421 051 03	Clamping sleeve		1	
26	900 027 016 02	spring ring B 10 Discontinued part		6	
26	900 027 016 03	spring ring B 10		6	
27	900 075 266 01	Hexagon bolt M 10 X 45		6	

Model	Year	MG	SG	Illustration	Restrictions	UPD	7:08	27.10.2023
928	1978	3	07	307-005		738		

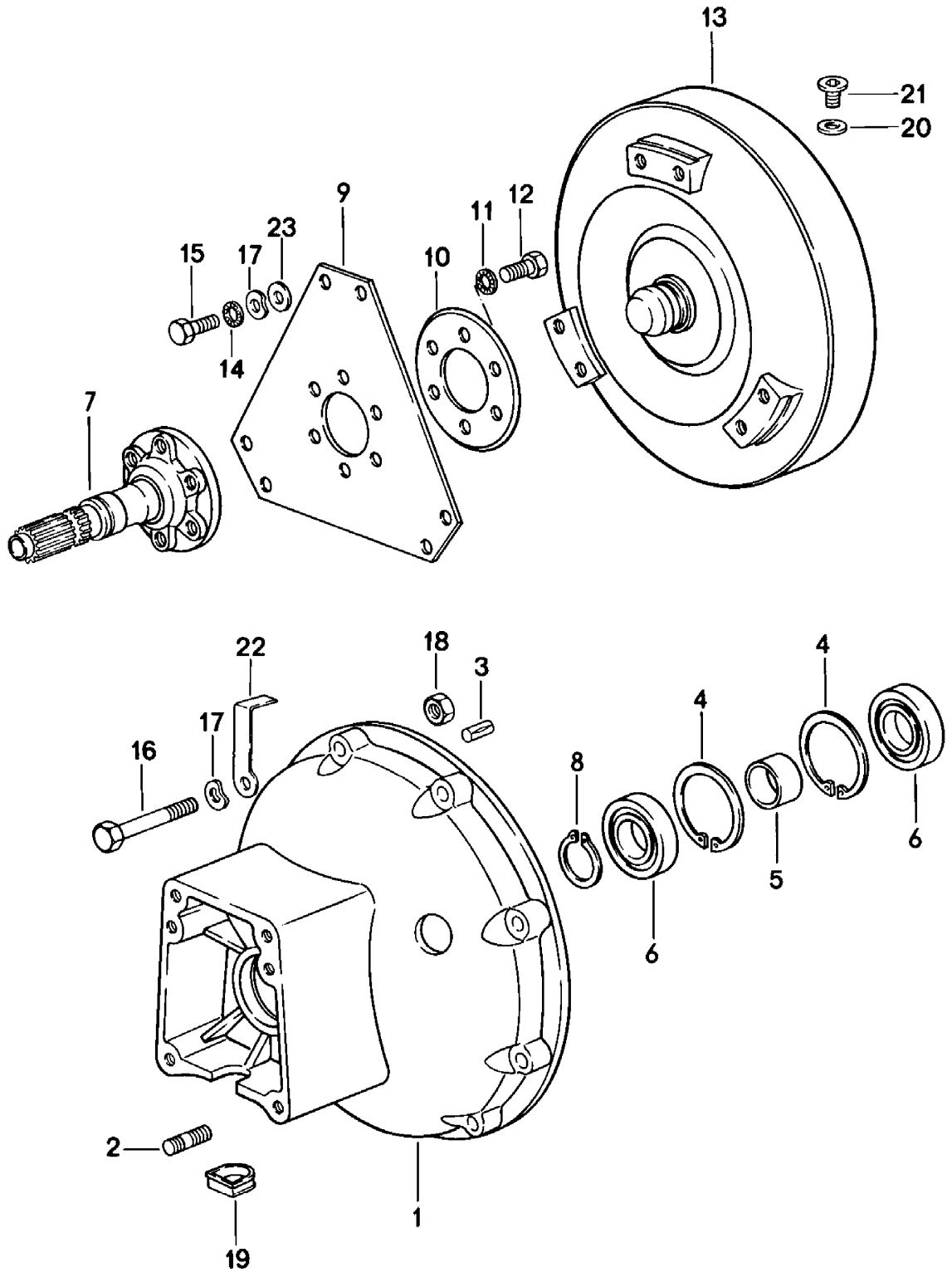

Model	Year	MG	SG	Illustration	Restrictions	UPD	7:08	27.10.2023
928	1978	3	07	307-005		738		

Pos	Part Number	Description	Remark	Qty	Model
		Converter converter housing Automatic gearbox			
1	922 321 101 03	converter housing	front	1	
2	900 061 004 02	Threaded pin M 8 X 12		2	
3	900 185 011 02	Tapered dowel pin		1	
4	N 012 319 1	Securing ring 62 X 2		2	
5	922 321 541 00	spacer bush		1	
6	900 052 117 00	grooved ball bearing Discontinued part		2	
6	PCG 052 117 00	grooved ball bearing		2	
7	922 421 101 04	Output flange only in conj. with: 922.116.101.01		1	A2204
8	N 012 375 1	Securing ring 30 X 1,5		1	
9	922 116 101 01	Clutch plate only in conj. with: 922.421.101.04		2	A2204
10	922 116 103 00	Shim		1	
11	999 523 103 01	Retaining washer		6	
12	900 083 039 01	Hexagon bolt M 10 X 1,25 X 20		6	
13	123 250 010 2	Converter Discontinued part		1	
13	123 250 010 2	Converter		1	
14	999 523 102 02	Toothed washer D >> - MJ 1979 Discontinued part		6	
14	999 523 102 0B	Toothed washer		6	
15	900 075 305 01	Hexagon bolt M 8 X 12 D >> - MJ 1979		6	
(15)	900 075 305 01	Hexagon bolt M 8 X 14 D - MJ 1980>>		6	
16	900 074 136 02	Hexagon bolt M 8 X 80 Discontinued part		8	

Model	Year	MG	SG	Illustration	Restrictions	UPD	7:08	27.10.2023
928	1978	3	07	307-005		738		

Pos	Part Number	Description	Remark	Qty	Model
16	900 074 136 03	Hexagon bolt M 8 X 80		8	
17	N 012 241 1	Spring washer		14	
18	900 076 025 02	Hexagon nut Discontinued part		1	
18	900 076 064 02	Hexagon nut		1	
19	928 301 171 00	Cap		1	
20	900 123 033 20	seal ring		1	
21	900 219 010 02	sealing plug M 10 X 1		1	
22	922 307 135 01	Support Vacuum line		1	
23	110 990 204 0	Washer D - MJ 1980>>		6	

Model	Year	MG	SG	Illustration	Restrictions	UPD	7:08	27.10.2023
928	1978	3	08	308-000		738		

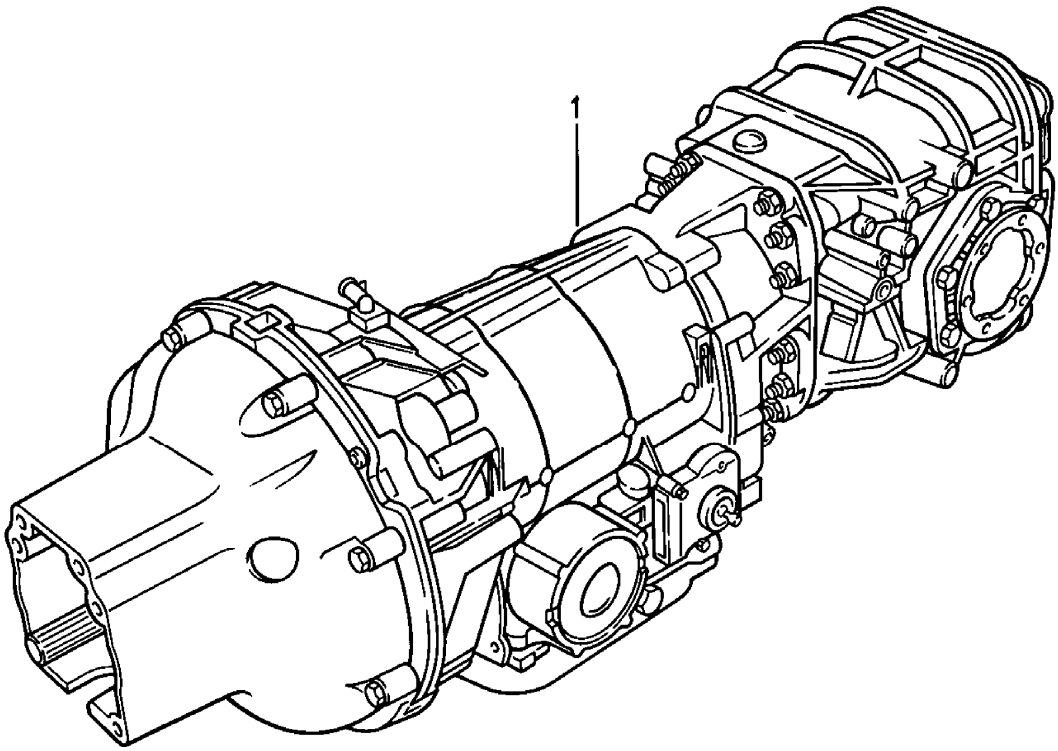

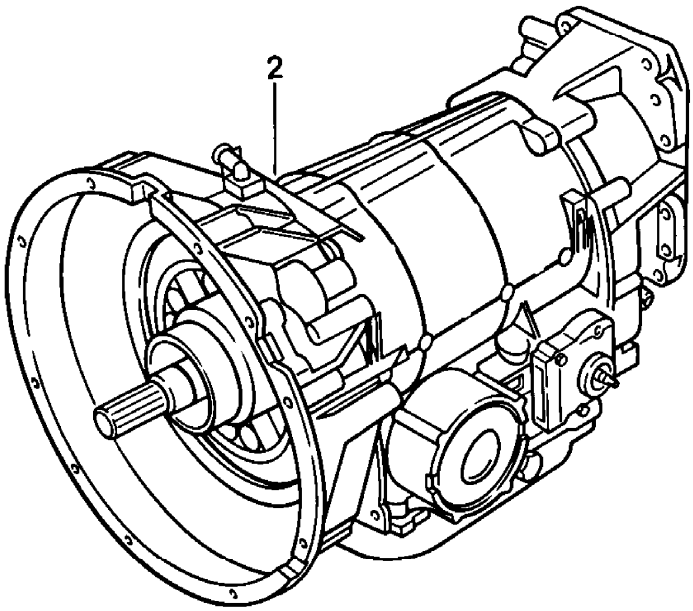

Model	Year	MG	SG	Illustration	Restrictions	UPD	7:08	27.10.2023
928	1978	3	08	308-000		738		

Pos	Part Number	Description	Remark	Qty	Model
		Gearbox **3-speed automatic gearbox**			
1	**922 300 003 01**	**3-speed automatic gearbox**		**1**	**A2201**
1	**922 300 003 04**	**3-speed automatic gearbox**		**1**	**A2204**
1	**922 300 903 01**	**3-speed automatic gearbox** **limited slip differential**	 **40%**	**1**	**A2201**
1	**922 300 903 04**	**3-speed automatic gearbox** **limited slip differential**	 **40%**	**1**	**A2204**
2	**722 270 030 1**	**Base gearbox** **without:** **Converter** **Differential**		**1**	**A2201**
2	**722 270 060 1**	**Base gearbox** **without:** **Converter** **Differential**		**1**	**A2204**

Model	Year	MG	SG	Illustration	Restrictions	UPD	7:08	27.10.2023
928	1978	3	08	308-001		738		

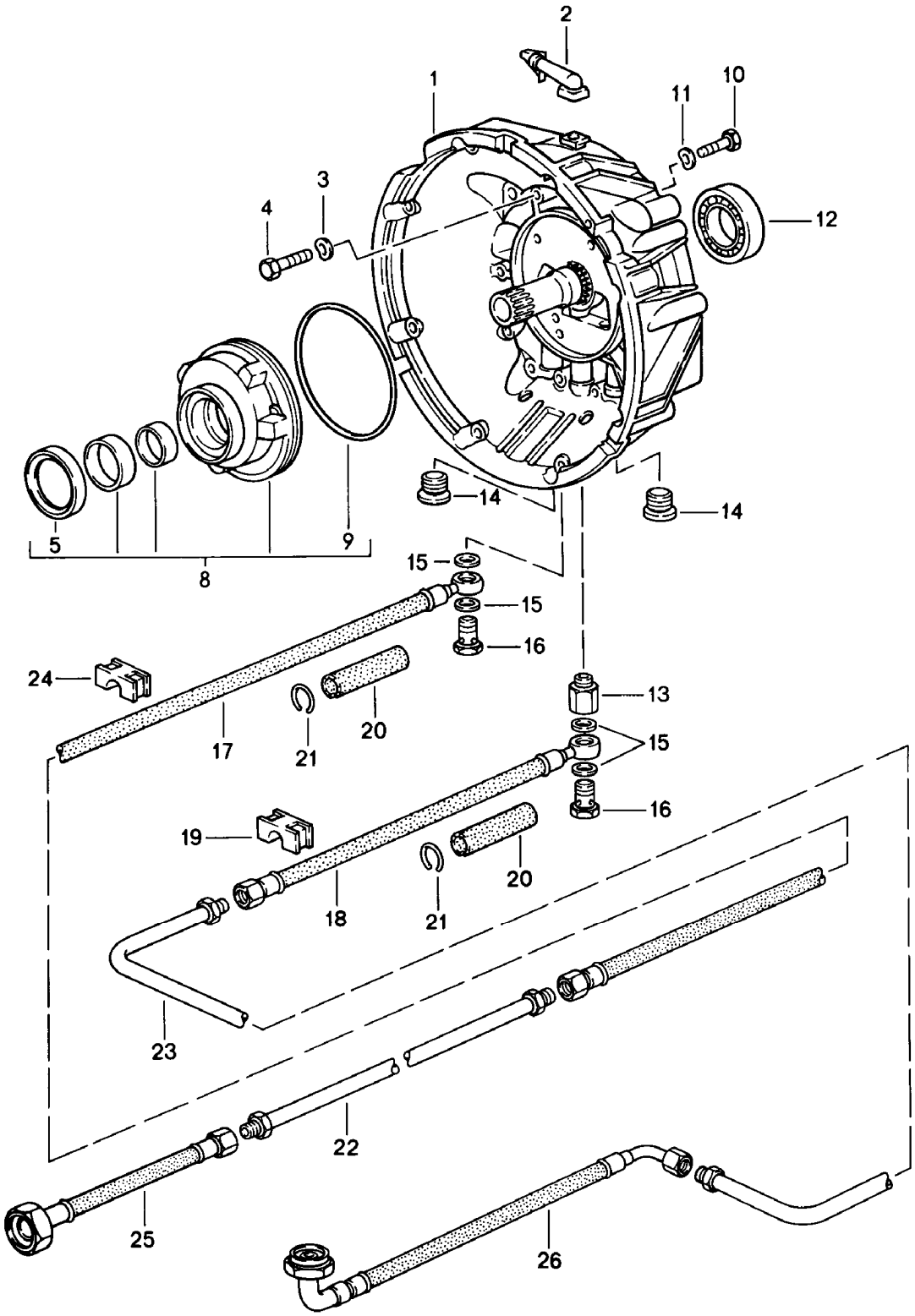

Model	Year	MG	SG	Illustration	Restrictions	UPD	7:08	27.10.2023
928	1978	3	08	308-001		738		

Pos	Part Number	Description	Remark	Qty	Model
		Gear housing 1 Automatic gearbox			
1	722 250 010 5	converter housing		1	
1	722 250 010 5X	converter housing with:	rear	1	
		shaft			
2	115 250 045 7	breather assy.		1	
3	722 990 024 0	Washer		11	
4	900 074 265 01	Hexagon bolt M 8 X 60		11	
5	017 997 324 7	seal ring		1	
8	116 270 009 0	oil pump	Primary	1	
9	004 997 054 8	seal ring		1	
10	N 010 335 5	Hexagon bolt M 8 X 35		4	
10	900 075 032 03	Hexagon bolt M 8 X 35		4	
11	N 012 241 8	Spring washer B 8		4	
12	900 052 120 00	grooved ball bearing 40 X 68 X 9		1	
13	115 257 105 7	threaded union		1	
14	900 219 001 30	sealing plug 22 X 1,5		2	
15	900 123 043 30	seal ring A 12 X 15,5		4	
16	900 175 020 02	Banjo bolt Discontinued part		2	
16	900 175 020 01	Banjo bolt		2	
17	922 307 020 00	Pressure hose Discontinued part	feed	1	
17	922 307 020 01	Pressure hose	feed	1	
18	922 307 021 00	Pressure hose Discontinued part	return	1	
18	922 307 021 01	Pressure hose	return	1	
19	922 307 114 02	Clamp		5	
20	922 307 121 00	Hose		2	

Model	Year	MG	SG	Illustration	Restrictions	UPD	7:08	27.10.2023
928	1978	3	08	308-001		738		

Pos	Part Number	Description	Remark	Qty	Model
21	900 906 024 00	snap ring		2	
22	922 307 018 99	Oil pipe	feed	1	
23	922 307 019 03	Oil pipe	return	1	
24	922 307 114 01	Clamp		10	
25	922 307 023 02	Pressure hose Discontinued part	feed	1	
25	922 307 023 04	Pressure hose	feed	1	
26	922 307 025 00	Pressure hose Discontinued part	return	1	
26	922 307 025 02	Pressure hose	return	1	

Model	Year	MG	SG	Illustration	Restrictions	UPD	7:09	27.10.2023
928	1978	3	08	308-005		738		

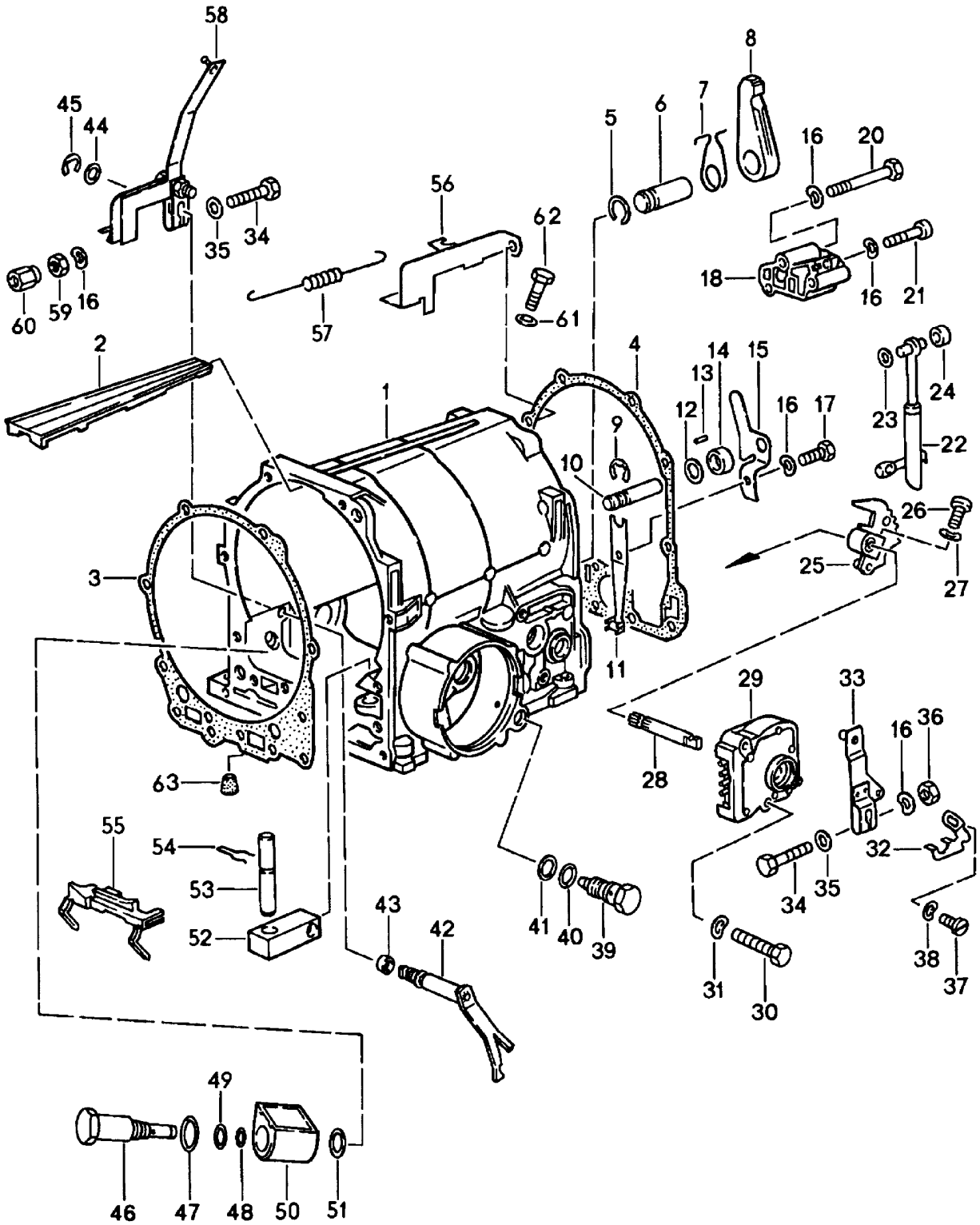

Model	Year	MG	SG	Illustration	Restrictions	UPD	7:09	27.10.2023
928	1978	3	08	308-005		738		

Pos	Part Number	Description	Remark	Qty	Model
		Gear housing 2 Automatic gearbox			
1	116 270 011 1	Gear housing		1	
2	116 277 004 0	Bracket	upper	1	
3	115 277 338 0	Seal		1	
4	116 271 018 0	Seal		1	
5	000 994 424 1	fuse		1	
6	115 278 077 4	Pin		1	
7	115 993 022 2	Spring		1	
8	115 278 022 1	pawl		1	
9	900 116 007 01	Retaining washer Discontinued part		1	
9	N 012 439 1	Retaining washer Discontinued part		1	
9	N 012 439 2	Retaining washer		1	
10	115 278 087 4	Pin		1	
11	100 270 017 8	Spring		1	
12	115 990 214 0	Washer		1	
13	000 981 518 7	Needle		23	
14	115 278 041 7	roller		1	
15	115 278 044 0	Bracket		1	
16	N 012 226 5	Spring washer		6	
17	N 010 215 13	Hexagon bolt M 6 X 15		1	
18	100 270 330 7	valve body with: governor		1	A2201,A2202
(18)	722 270 100 7	regulating valve D - MJ 1982>> - MJ 1982		1	A2204
(18)	722 270 100 7X	regulating valve D - MJ 1982>> - MJ 1982		1	A2204
20	900 074 111 02	Hexagon bolt M 6 X 50		2	
21	900 067 008 02	Socket head bolt M 6 X 30 Discontinued part		1	

Model	Year	MG	SG	Illustration	Restrictions	UPD	7:09	27.10.2023
928	1978	3	08	308-005		738		

Pos	Part Number	Description	Remark	Qty	Model
21	900 067 008 03	Socket head bolt M 6 X 30		1	
22	116 270 006 5	Poles		1	
23	115 278 006 2	pressure washer		1	
24	115 278 051 7	roller		1	
25	115 270 045 7	locking segment		1	
26	N 014 774 1	Socket head bolt with hexagon socket head M 6 X 18		1	
27	N 012 226 5	Spring washer		1	
28	115 278 161 0	Regulator shaft		1	
29	000 545 420 6	Switch		1	
30	900 075 287 02	Hexagon bolt M 6 X 28		2	
31	N 012 222 4	Spring washer		2	
32	115 545 014 2	Follower		1	
33	922 424 063 00	lever		1	
34	N 010 220 3	Hexagon bolt M 6 X 30		2	
35	N 011 524 7	Washer Discontinued part		2	
35	N 011 524 27	Washer		2	
36	900 076 010 02	Nut Discontinued part		1	
36	900 076 010 0B	Nut		1	
36	900 076 010 03	Nut		1	
37	900 075 106 02	Hexagon bolt M 4 X 6		1	
38	N 012 224 3	Spring washer B 4 Discontinued part		1	
38	N 012 224 C	Spring washer B 4		1	
39	115 270 248 9	Valve		1	
40	002 997 214 8	seal ring		1	
41	900 123 019 30	seal ring		1	

Model	Year	MG	SG	Illustration	Restrictions	UPD	7:09	27.10.2023
928	1978	3	08	308-005		738		

Pos	Part Number	Description	Remark	Qty	Model
42	115 270 145 9	lever		1	
43	006 997 614 6	seal ring		1	
44	115 990 174 0	Washer		1	
45	900 116 006 02	Retaining washer		1	
46	000 304 129 0	solenoid		1	
47	010 997 774 5	O-ring 19 X 1,8		1	
48	008 997 304 8	seal ring 12,5 X 1,5		1	
49	001 997 354 8	seal ring		1	
50	000 304 119 0	housing		1	
51	115 304 016 0	seal ring aluminium		1	
52	115 277 042 4	lever		1	
53	115 277 027 4	Pin		1	
54	115 993 022 5	Spring		1	
55	115 277 244 0	Bracket		1	
56	922 307 133 03	Bracket		1	
57	922 321 130 04	tension spring		1	
58	922 321 023 06	lever Pressure adjuster		1	
59	N 011 116 5	Hexagon nut		1	
60	922 321 129 00	hexagon nut, self-locking		1	
61	900 123 105 30	seal ring		1	
62	115 997 063 0	sealing plug		1	
63	722 271 005 0	Rubber bush		1	

Model	Year	MG	SG	Illustration	Restrictions	UPD	7:09	27.10.2023
928	1978	3	08	308-010		738		

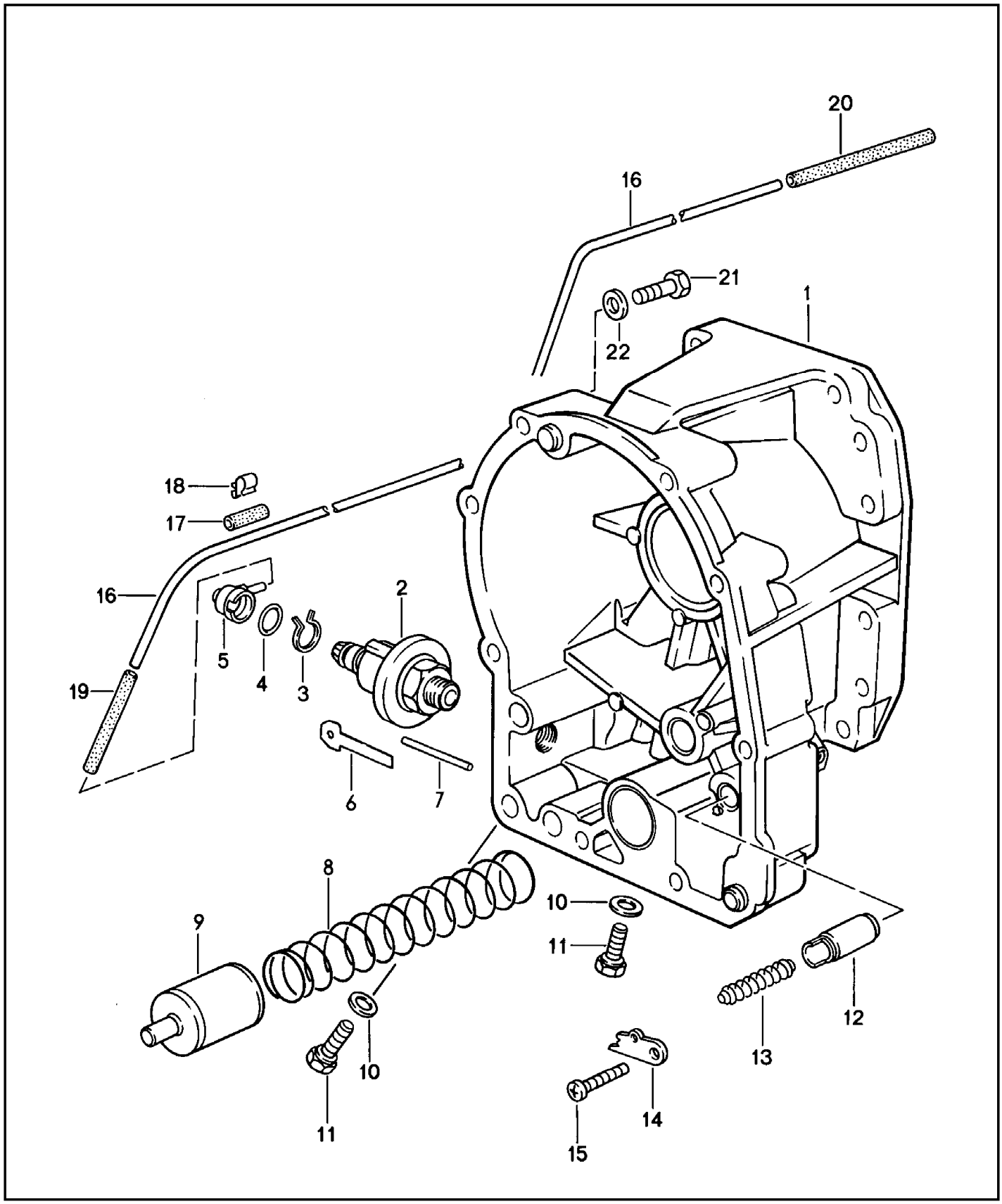

Model	Year	MG	SG	Illustration	Restrictions	UPD	7:09	27.10.2023
928	1978	3	08	308-010		738		

Pos	Part Number	Description	Remark	Qty	Model
		Gear housing 3 Automatic gearbox			
1	722 270 011 1	Gear housing Discontinued part		1	
(1)	722 270 011 1	Gear housing		1	
2	123 270 007 9	diaphragm		1	
3	115 994 293 5	snap ring		1	
4	002 997 574 8	seal ring		1	
5	116 276 018 3	Cap		1	
6	114 277 024 0	Bracket		1	
7	123 277 027 5	Pin 39,15 MM		1	
(7)	115 277 297 5	Pin 39,65 MM		1	
(7)	115 277 307 5	Pin 40,15 MM		X	
8	115 993 050 4	Spring		1	
9	115 277 503 8	piston		1	
10	900 123 105 30	seal ring		2	
11	115 997 063 0	sealing plug		2	
12	115 277 413 1	piston		1	
13	115 993 340 4	Spring		1	
14	115 277 274 0	Bracket		1	
15	900 146 037 02	fillister hd. bolt		1	
16	922 307 131 01	Pipe assembly		1	
-	999 181 167 50	Hose		*	
17		shorten to:	20 MM	3	
18	999 651 159 02	Cable fastener		2	
-	999 239 003 40	Hose		*	
19		shorten to:	60 MM	1	
20		shorten to:	120 MM	1	
21	900 074 265 01	Hexagon bolt M 8 X 60		10	

Model	Year	MG	SG	Illustration	Restrictions	UPD	7:09	27.10.2023
928	1978	3	08	308-010		738		

Pos	Part Number	Description	Remark	Qty	Model
22	**722 990 024 0**	**Washer**		**10**	

Model	Year	MG	SG	Illustration	Restrictions	UPD	7:09	27.10.2023
928	1978	3	09	309-000		738		

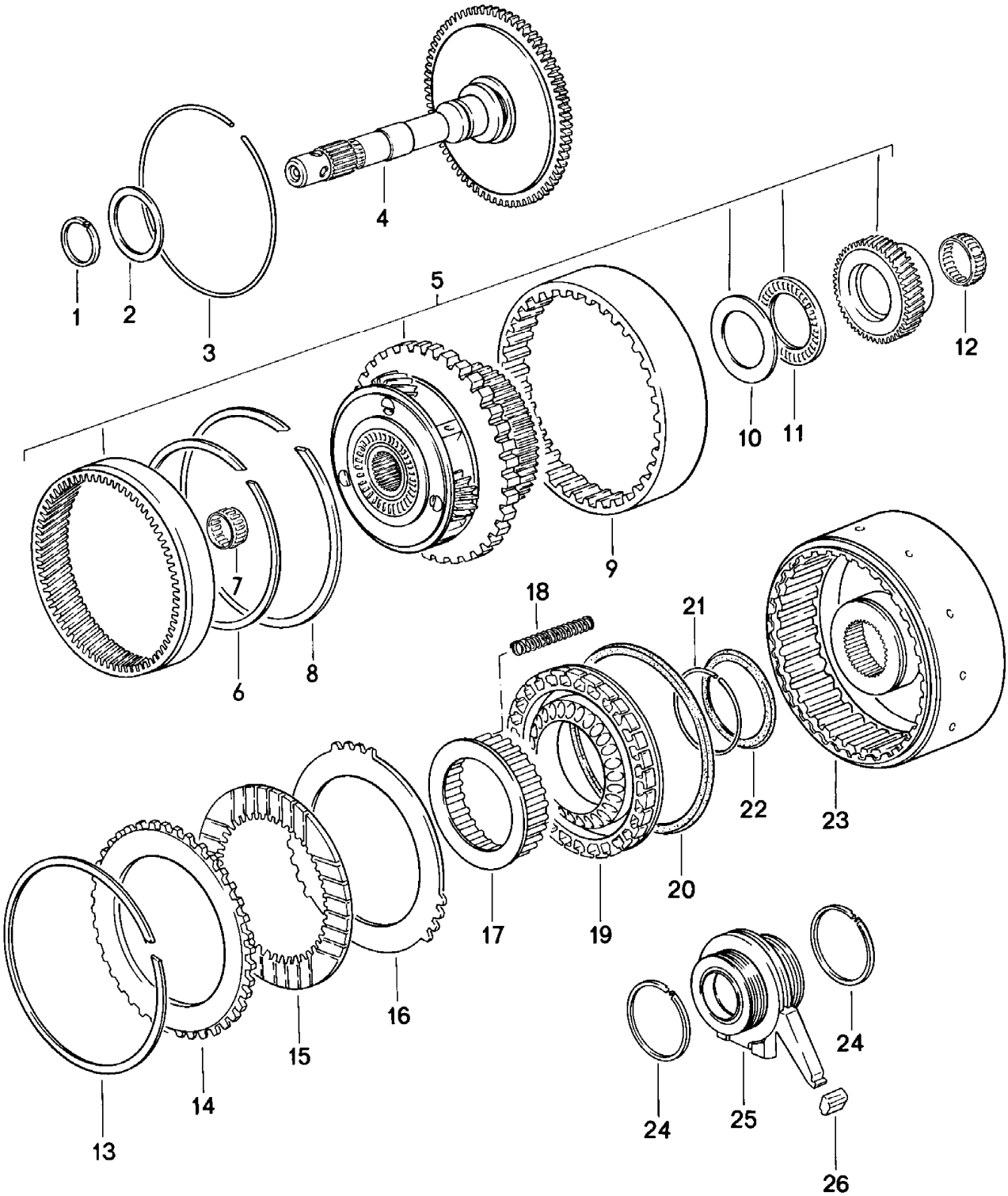

Model	Year	MG	SG	Illustration	Restrictions	UPD	7:09	27.10.2023
928	1978	3	09	309-000		738		

Pos	Part Number	Description	Remark	Qty	Model
		gears and shafts 1 Automatic gearbox			
1	100 272 045 5	seal ring		1	
2	100 272 125 2	Shim		X	
(2)	100 272 135 2	Shim		X	
(2)	100 272 145 2	Shim		X	
3	115 272 027 3	snap ring		1	
4	116 270 092 5	Input shaft		1	
5	722 270 064 3	planet pinion carrier		1	A2201,A2202
(5)	722 270 104 3	planet pinion carrier D - MJ 1982>> - MJ 1982		1	A2204
6	115 272 047 3	Securing ring		1	
7	001 981 801 0	needle bearing -		1	
8	112 994 073 5	snap ring		1	
9	116 272 002 7	multi-plate housing		1	
10	100 272 085 2	Shim		X	
(10)	100 272 095 2	Shim		X	
(10)	100 272 105 2	Shim		X	
11	000 981 991 0	needle bearing -		1	
12	002 981 321 0	needle bearing -		2	
13	115 272 127 3	Securing ring		1	
14	109 272 182 6	external disc		1	
15	115 272 002 5	Internal disc 2,0 MM		6	
16	109 272 062 6	external disc		6	
(16)	109 272 082 6	external disc		X	
17	100 272 026 4	spring disc		1	
18	100 993 020 2	Spring		28	
19	116 270 163 2	piston		1	
20	109 272 099 2	Gaiter		1	
21	115 994 083 5	snap ring		1	

Model	Year	MG	SG	Illustration	Restrictions	UPD	7:09	27.10.2023
928	1978	3	09	309-000		738		

Pos	Part Number	Description	Remark	Qty	Model
22	115 272 149 2	Gaiter D >> - MJ 1979 Discontinued part		1	
(22)	115 272 149 2	Gaiter D - MJ 1980>>		1	
23	116 270 242 0	flange		1	
24	115 272 065 5	seal ring		4	
25	115 270 215 0	bush		1	
26	115 272 079 2	Gaiter		1	

Model	Year	MG	SG	Illustration	Restrictions	UPD	7:09	27.10.2023
928	1978	3	09	309-005		738		

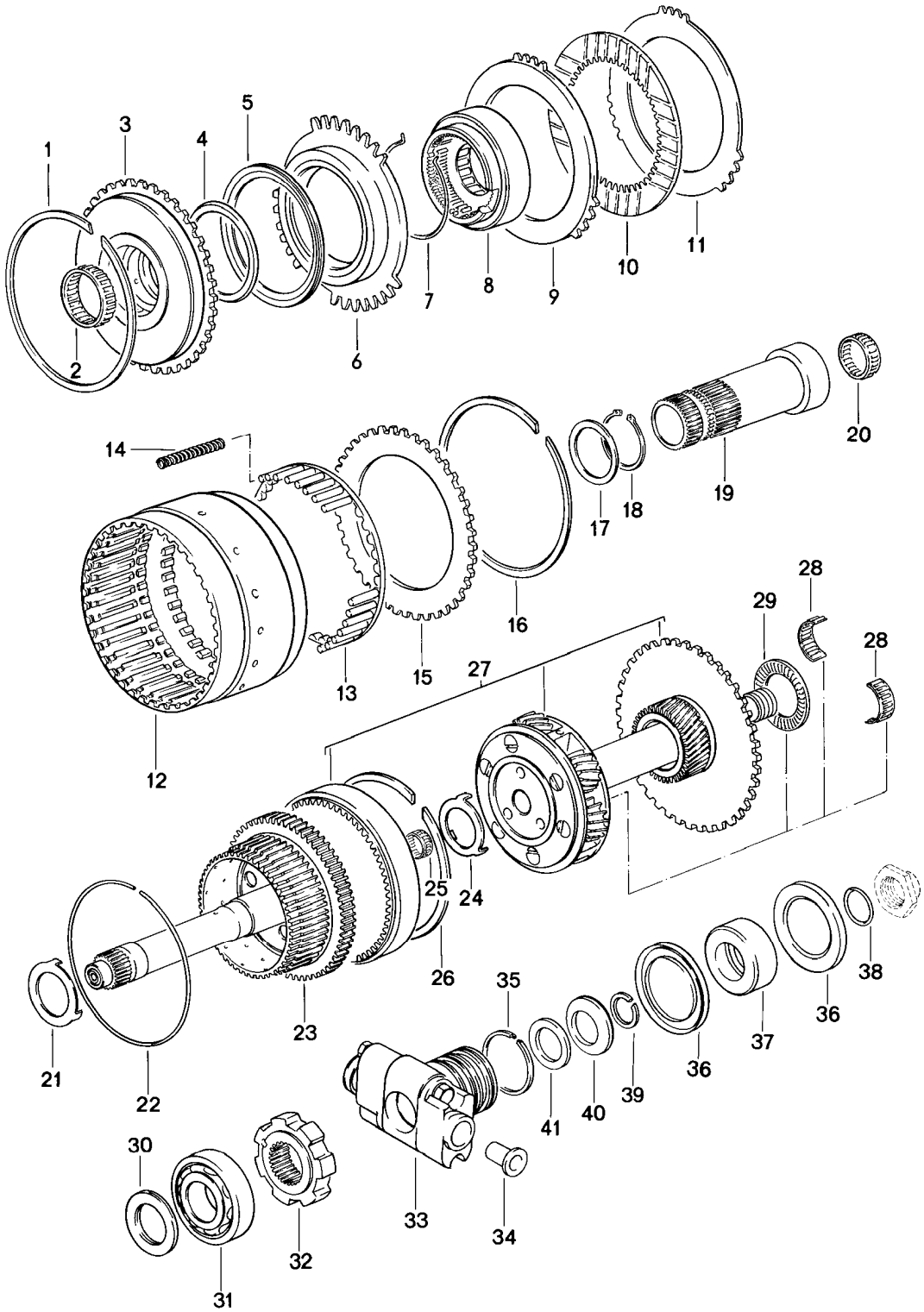

Model	Year	MG	SG	Illustration	Restrictions	UPD	7:09	27.10.2023
928	1978	3	09	309-005		738		

Pos	Part Number	Description	Remark	Qty	Model
		gears and shafts 2 Automatic gearbox			
1	115 272 047 3	Securing ring		1	
2	002 981 311 0	needle bearing -		1	
3	116 270 202 0	flange		1	
4	109 272 049 2	Gaiter		1	
5	115 272 169 2	Gaiter		1	
6	116 272 023 1	piston		1	
7	109 994 003 5	snap ring		1	
8	100 270 003 1	Freewheel		1	
9	109 272 222 6	external disc		1	
(9)	109 272 232 6	external disc		X	
10	115 272 002 5	Internal disc 2,0 MM		6	
11	109 272 062 6	external disc		4	
(11)	109 272 082 6	external disc		X	
(11)	109 272 152 6	external disc		1	
12	100 272 412 4	multi-plate housing		1	
13	109 272 036 7	spring disc		1	
14	100 993 880 1	Spring		18	
15	109 272 212 6	external disc		1	
16	115 272 137 3	Securing ring		1	
17	100 272 125 2	Shim		1	
(17)	100 272 135 2	Shim		X	
(17)	100 272 145 2	Shim		X	
18	N 012 382 1	outer ring 40 X 1,75		1	
19	100 272 392 0	shaft		1	
20	002 981 321 0	needle bearing -		2	
21	115 272 346 2	pressure washer		1	
22	112 994 073 5	snap ring		1	
23	116 270 132 5	Input shaft		1	

Model	Year	MG	SG	Illustration	Restrictions	UPD	7:09	27.10.2023
928	1978	3	09	309-005		738		

Pos	Part Number	Description	Remark	Qty	Model
24	722 272 006 2	pressure washer		1	A2201,A2202
(24)	722 272 016 2	pressure washer		1	A2204
25	002 981 301 0	needle bearing -		1	
26	115 272 027 3	snap ring		1	
27	722 270 034 3	planet pinion carrier A >> 005 005797		1	A2201,A2202
27	722 270 114 3	planet pinion carrier A 005 005798 >>		1	A2201
(27)	722 270 114 3	planet pinion carrier		1	A2204
28	007 981 391 0	needle bearing - Discontinued part		1	A2201,A2202
28	007 981 391 0	needle bearing -		1	A2204
29	004 981 401 0	needle bearing -		1	
30	115 272 376 2	pressure washer		1	
31	001 981 182 5	ball bearing		1	
32	722 272 001 7	gear		1	
33	722 270 007 4	centrifugal governor		1	A2201,A2202
33	722 270 007 4X	centrifugal governor		1	A2201,A2202
(33)	722 270 027 4	governor		1	A2204
34	115 270 009 8	strainer		2	
35	115 272 135 5	seal ring		3	
36	922 321 301 07	seal ring		2	
37	922 302 403 02	Spacer ring A >> 005 005797		1	A2201,A2202
(37)	922 302 404 00	Spacer ring A 005 005798 >>		1	A2201
(37)	922 302 404 00	Spacer ring		1	A2204
38	922 302 401 00	O-ring A >> 005 005797		1	A2201,A2202
(38)	922 302 402 01	O-ring A 005 005798 >>		1	A2201
(38)	922 302 402 01	O-ring		1	A2204
39	722 994 003 5	snap ring A 005 005798 >>		1	A2201
39	722 994 003 5	snap ring		1	A2204

Model	Year	MG	SG	Illustration	Restrictions	UPD	7:09	27.10.2023
928	1978	3	09	309-005		738		

Pos	Part Number	Description	Remark	Qty	Model
40	722 993 002 6	Belleville spring A 005 005798 >>		1	A2201
40	722 993 002 6	Belleville spring		1	A2204
41	900 234 082 01	fitted washer A 005 005798 >>		1	A2201
41	900 234 082 01	fitted washer		1	A2204

Model	Year	MG	SG	Illustration	Restrictions	UPD	7:10	27.10.2023
928	1978	3	09	309-010		738		

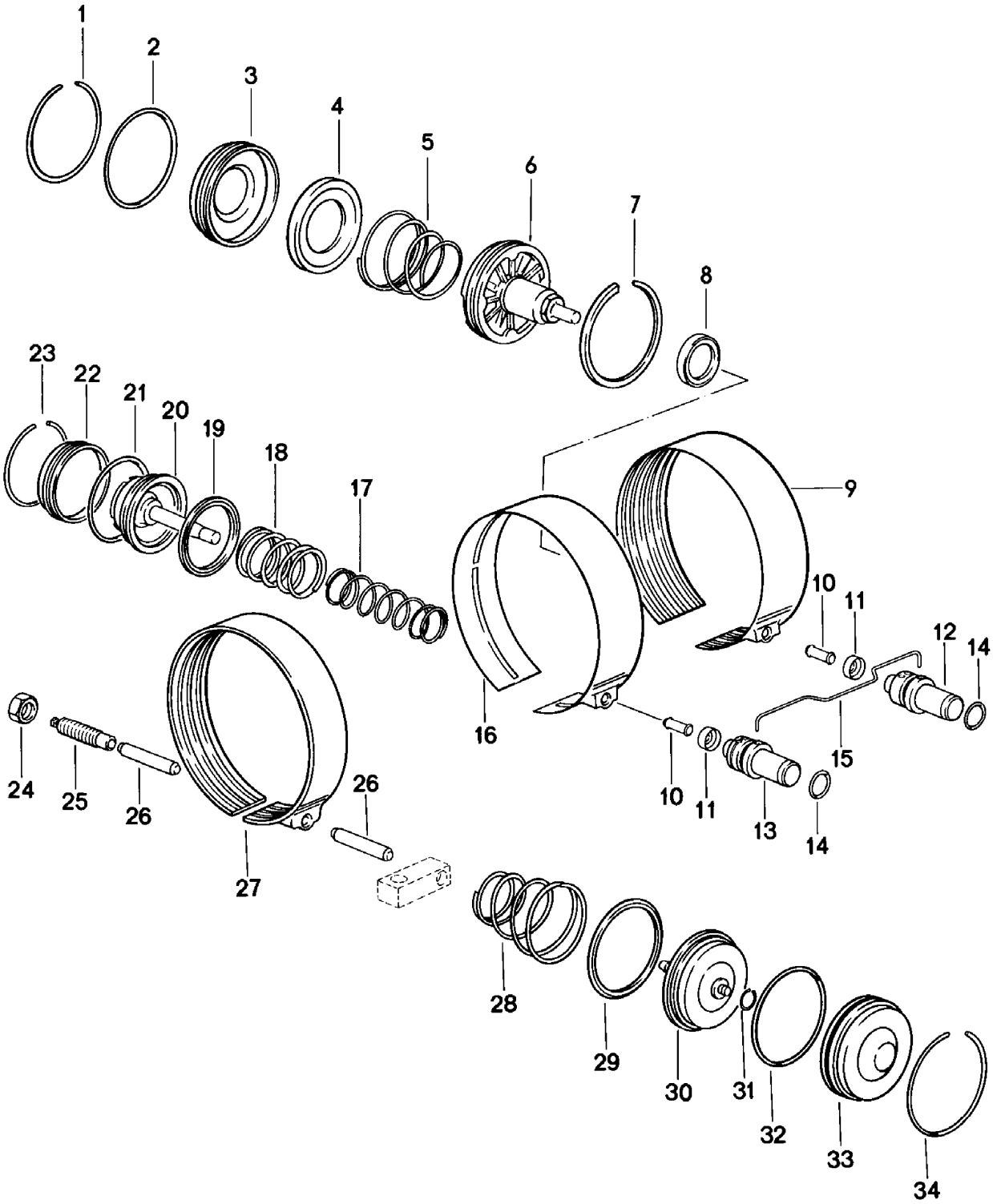

Model	Year	MG	SG	Illustration	Restrictions	UPD	7:10	27.10.2023
928	1978	3	09	309-010		738		

Pos	Part Number	Description	Remark	Qty	Model
		brake band Automatic gearbox			
1	115 994 273 5	snap ring		1	
2	000 997 484 8	seal ring		1	
3	115 277 420 3	Cover		1	
4	115 277 177 7	Guide piece		1	
5	115 993 230 5	Spring		1	
6	115 270 693 2	piston		1	
7	115 277 075 5	seal ring		1	
8	115 272 119 2	Gaiter Discontinued part		1	
(8)	115 272 119 2	Gaiter		1	
9	115 270 726 2	brake band		1	
10	109 277 027 5	Pin 23 MM		1	
(10)	109 277 037 5	Pin 24 MM		X	
(10)	109 277 047 5	Pin 25 MM		X	
(10)	109 277 057 5	Pin 26 MM		X	
11	115 277 175 8	Bracket		2	
12	109 270 118 9	Valve B 2		1	
13	109 270 108 9	Valve B 1		1	
14	010 997 084 5	seal ring		2	
15	115 993 002 2	retaining spring		1	
16	115 270 696 2	brake band		1	
16	115 270 696 2	brake band (asbestos free)		1	
17	116 993 530 1	Spring		1	A2201,A2202
(17)	115 993 550 3	Spring		1	A2204
18	116 993 540 1	Spring		1	A2201,A2202
(18)	115 993 540 3	Spring		1	A2204

Model	Year	MG	SG	Illustration	Restrictions	UPD	7:10	27.10.2023
928	1978	3	09	309-010		738		

Pos	Part Number	Description	Remark	Qty	Model
19	115 272 109 2	Gaiter		1	
20	115 270 663 2	piston		1	
21	000 997 474 8	seal ring		1	
22	115 277 410 3	Cover		1	
23	115 994 263 5	snap ring		1	
24	115 990 045 1	Hexagon nut M 14 X 1,5		1	
25	115 277 177 1	sheer bolt		1	
26	115 277 537 5	Pin		2	
27	116 270 186 2	brake band Discontinued part		1	
27	116 270 186 2	brake band (asbestos free)		1	
28	115 993 180 5	Spring		1	
29	115 272 089 2	Gaiter		1	
30	115 270 743 2	piston		1	
31	115 994 173 5	snap ring		1	
32	008 997 354 5	seal ring		1	
33	115 277 370 3	Cover		1	
34	115 994 303 5	snap ring		1	

Model	Year	MG	SG	Illustration	Restrictions	UPD	7:10	27.10.2023
928	1978	3	10	310-000		738		

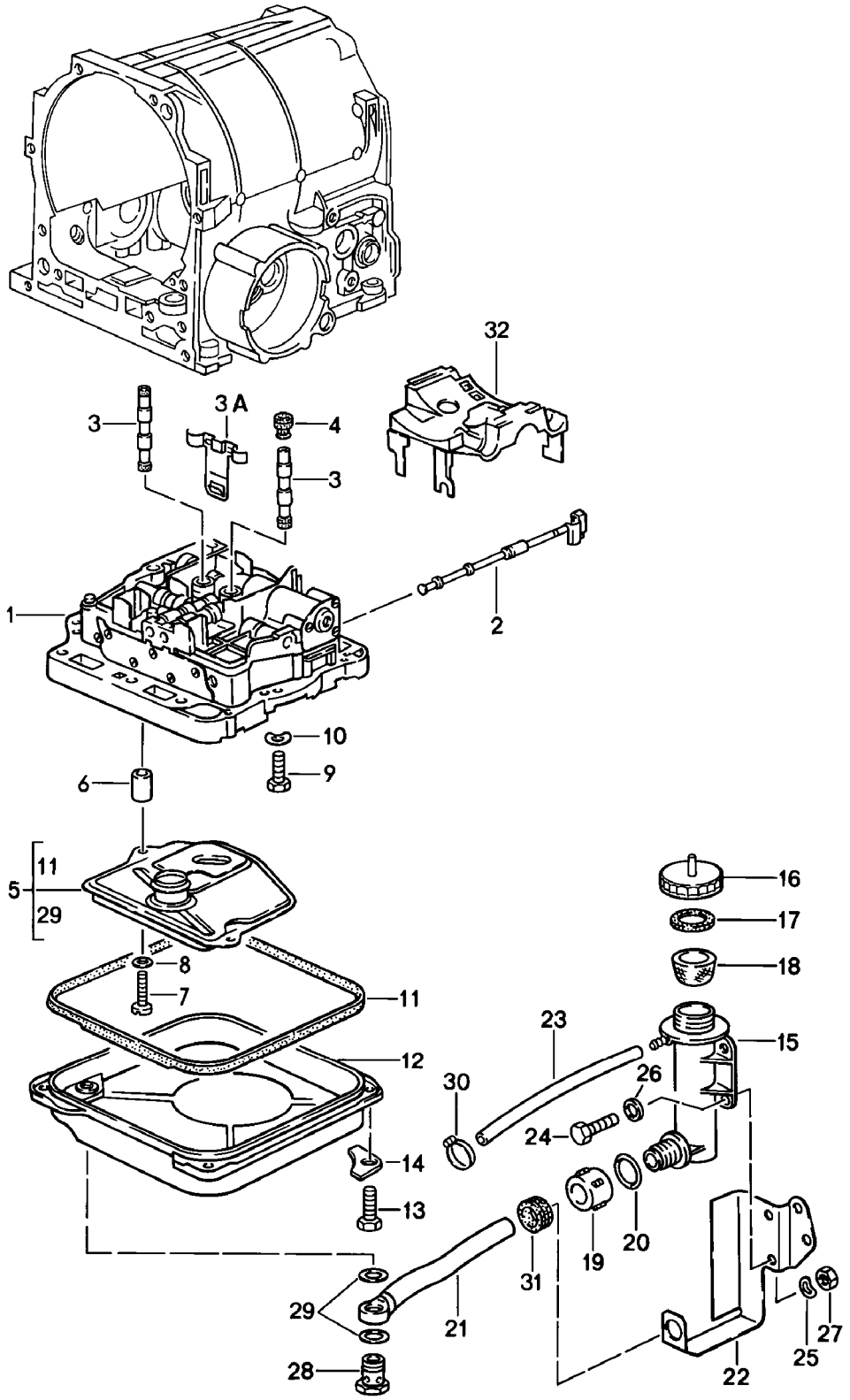

Model	Year	MG	SG	Illustration	Restrictions	UPD	7:10	27.10.2023
928	1978	3	10	310-000		738		

Pos	Part Number	Description	Remark	Qty	Model
		Selector housing Automatic gearbox			
(1)	722 270 140 7	mechatronic		1	A2201
(1)	722 270 140 7X	mechatronic		1	A2201
(1)	722 270 110 7	mechatronic		1	A2204
2	115 270 047 0	regulating valve		1	
3	115 270 106 8	guide tube		2	
3A	115 277 284 0	Bracket		2	
4	115 277 335 0	bush		4	
5	123 270 009 8	Repair kit for oil filter		1	
6	123 277 005 3	Spacer tube		2	
7	900 146 010 02	fillister hd. bolt M 5 X 30		2	
8	N 012 225 2	Spring washer		2	
9	900 075 030 02	Hexagon bolt M 8 X 28		11	
10	900 028 004 01	Spring washer		11	
11	115 271 158 0	gasket for oil sump Discontinued part		1	
11	115 271 168 0	gasket for oil sump		1	
12	123 270 011 2	oil sump		1	
13	900 075 079 02	Hexagon bolt M 8 X 22		4	
14	115 271 019 4	Insert		4	
15	922 321 535 00	Filling container		1	
16	477 321 481	Cap closure		1	
17	477 321 483 A	Seal		1	
18	477 321 479 A	strainer		1	
19	922 321 533 00	Union nut		1	
20	922 321 537 00	O-ring		1	
21	922 321 051 05	Filler tube		1	
22	922 321 519 02	Bracket		1	
23	922 321 539 00	Hose		1	

Model	Year	MG	SG	Illustration	Restrictions	UPD	7:10	27.10.2023
928	1978	3	10	310-000		738		

Pos	Part Number	Description	Remark	Qty	Model
24	999 072 005 09	Hexagon nut M 6 X 12 Discontinued part		2	
24	999 072 005 01	Hexagon bolt M 6 X 12		2	
25	N 012 006 4	spring ring		2	
26	N 011 524 7	Washer Discontinued part		2	
26	N 011 524 27	Washer		2	
27	900 076 010 02	Nut Discontinued part		2	
27	900 076 010 0B	Nut		2	
27	900 076 010 03	Nut		2	
28	115 990 016 3	Banjo bolt		1	
29	900 123 007 30	seal ring		2	
30	999 512 082 02	Hose clamp Discontinued part		1	
30	999 512 082 01	Hose clamp		1	
31	900 622 015 40	Grommet		1	
32	115 277 294 0	Bracket for brake band		1	
-	722 277 001 4	Intermediate plate		1	
-	116 277 088 0	Seal		1	

Model	Year	MG	SG	Illustration	Restrictions	UPD	7:10	27.10.2023
928	1978	3	11	311-000		738		

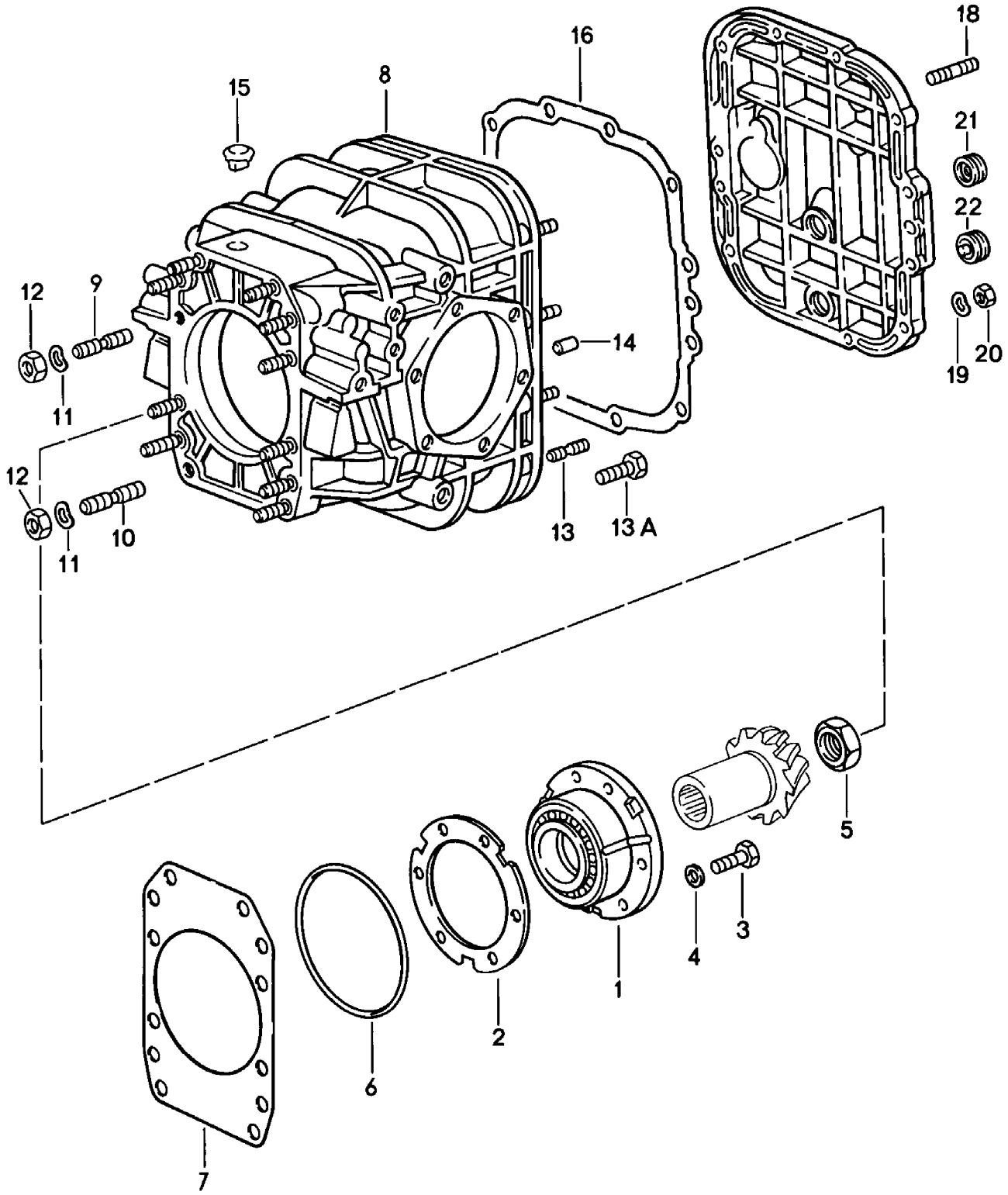

Model	Year	MG	SG	Illustration	Restrictions	UPD	7:10	27.10.2023
928	1978	3	11	311-000		738		

Pos	Part Number	Description	Remark	Qty	Model
		Differential 1 Automatic gearbox			
1	922 302 063 19	Bearing bush		1	A2201
1	922 302 063 19	Bearing bush		1	A2204
2	922 302 298 00	adjusting washer 0,15 MM		X	
(2)	922 302 298 01	adjusting washer 0,20 MM		X	
(2)	922 302 298 02	adjusting washer 0,25 MM		X	
(2)	922 302 298 03	adjusting washer 0,40 MM		X	
(2)	922 302 298 04	adjusting washer 0,50 MM		X	
3	N 010 244 6	Hexagon bolt M 8 X 30		6	
4	999 523 102 02	Toothed washer Discontinued part		6	
4	999 523 102 0B	Toothed washer		6	
5	922 302 282 00	Collar nut		1	
6	922 321 311 00	O-ring		1	
7	922 302 297 00	adjusting washer 0,15 MM		X	
(7)	922 302 297 01	adjusting washer 0,20 MM		X	
(7)	922 302 297 02	adjusting washer 0,25 MM		X	
(7)	922 302 297 03	adjusting washer 0,40 MM		X	
(7)	922 302 297 04	adjusting washer 0,50 MM		X	
8	922 321 041 01	rear axle housing		1	
8	922 321 041 AX	rear axle housing		1	
9	999 062 086 02	Threaded pin M 10 X 30		10	
10	999 062 210 02	Threaded pin M 10 X 35		2	
11	N 012 230 1	Spring washer		12	

Model	Year	MG	SG	Illustration	Restrictions	UPD	7:10	27.10.2023
928	1978	3	11	311-000		738		

Pos	Part Number	Description	Remark	Qty	Model
12	N 011 010 6	Hexagon nut Discontinued part		12	
12	N 101 552 10	Hexagon nut		12	
13	999 062 007 02	Threaded pin BM 8 X 22 D >> - MJ 1979 Discontinued part		12	
13	900 060 106 01	Threaded pin BM 8 X 22		12	
13A	900 075 099 02	Hexagon bolt M 8 X 30 D - MJ 1980>> Discontinued part		12	
13A	900 075 099 03	Hexagon bolt M 8 X 30 D - MJ 1980>>		12	
14	900 012 086 00	Cylinder pin		2	
15	928 301 311 01	breather assy.		1	
16	928 301 395 03	Seal		1	
17	928 301 035 04	Housing cover D >> - MJ 1978		1	
17	928 301 305 09	Housing cover D - MJ 1979>>		1	
18	900 061 004 02	Threaded pin M 8 X 12		3	
19	N 012 241 8	Spring washer		12	
20	900 076 025 02	Hexagon nut Discontinued part		12	
20	900 076 064 02	Hexagon nut		12	
21	999 064 019 02	sealing plug Discontinued part		1	
21	999 064 019 0C	sealing plug		1	
22	999 064 020 02	sealing plug Magnet		1	

Model	Year	MG	SG	Illustration	Restrictions	UPD	7:11	27.10.2023
928	1978	3	11	311-005		738		

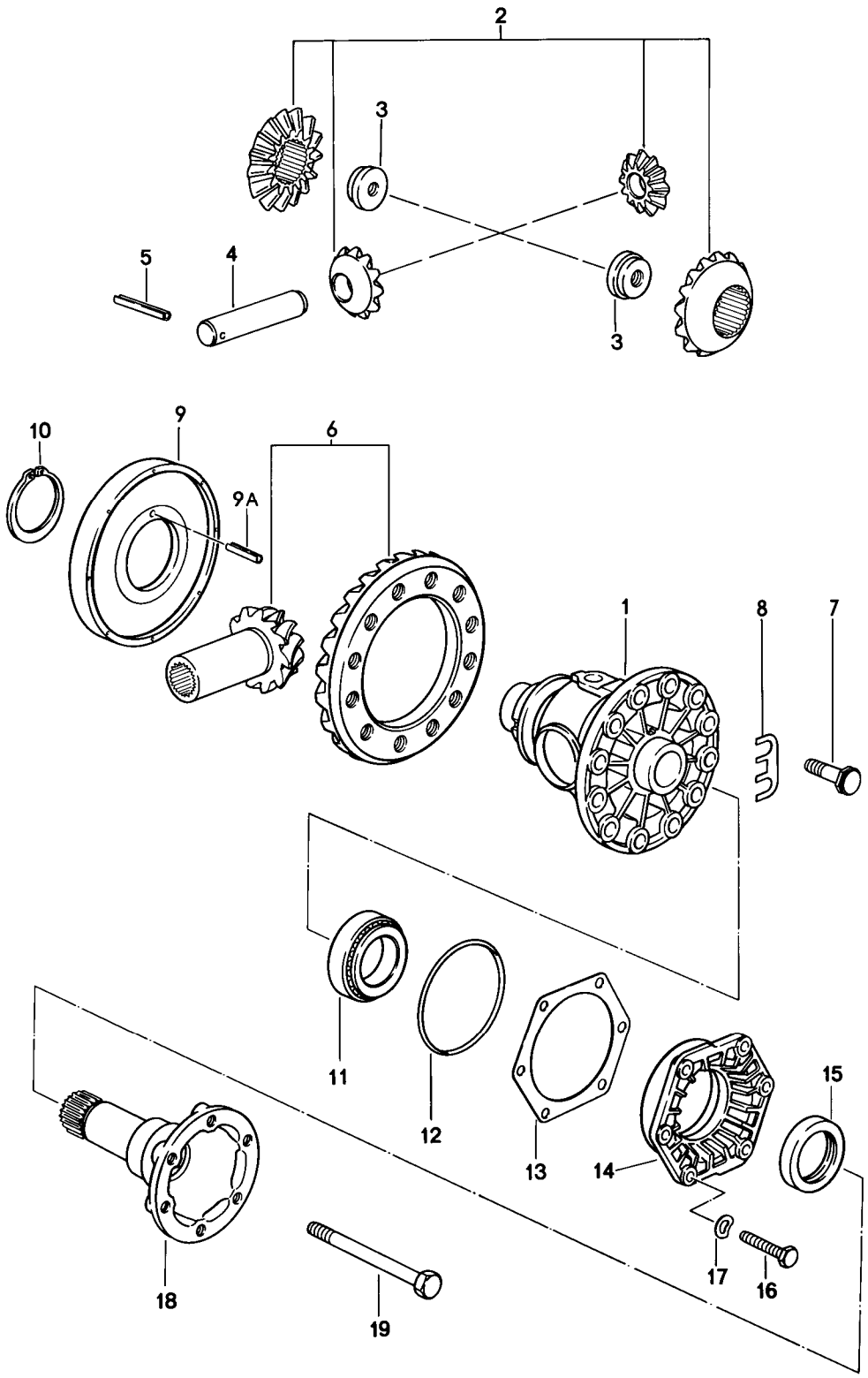

Model	Year	MG	SG	Illustration	Restrictions	UPD	7:11	27.10.2023
928	1978	3	11	311-005		738		

Pos	Part Number	Description	Remark	Qty	Model
		Differential 2 Automatic gearbox			
1	928 332 212 04	Differential housing G >> 161 1175 G >> 161 5608		1	A2201,A2204
1	928 332 212 04	Differential housing G 161 1176 >> G 161 5609 >>		1	A2201,A2204
2	928 332 902 00	1 set: differential pinions G >> 161 1175 G >> 161 5608		1	A2201,A2204
2	928 332 902 01	1 set: differential pinions G 161 1176 >> G 161 5609 >>		1	A2201,A2204
2	928 332 902 90	1 set: differential pinions G 161 1176 >> G 161 5609 >> Discontinued part		1	A2201,A2204
2	950 332 902 90	1 set: differential pinions G 161 1176 >> G 161 5609 >>		1	A2201,A2204
3	928 332 279 02	Nut G >> 161 1175 G >> 161 5608		2	A2201,A2204
3	928 332 279 02	Nut G 161 1176 >> G 161 5609 >>		2	A2201,A2204
4	005 409 177 00	Pin G >> 161 1175 G >> 161 5608		1	A2201,A2204
4	928 332 207 05	Pin 21 MM G 161 1176 >> G 161 5609 >>		1	A2201,A2204
5	900 309 035 00	spring pin 5 X 40		1	
6	922 302 911 03	pinion gear set 33:12		1	
7	928 332 276 00	Hexagon bolt		12	
8	928 332 285 00	Retaining plate		6	
9	928 318 024 02	impulse rotor Discontinued part		1	
9	928 318 024 02	impulse rotor		1	

Model	Year	MG	SG	Illustration	Restrictions	UPD	7:11	27.10.2023
928	1978	3	11	311-005		738		

Pos	Part Number	Description	Remark	Qty	Model
(9A)	N 043 285 1	spring pin 5 X 20		1	
10	999 152 089 01	snap ring		1	
11	999 059 027 00	Taper roller bearing Discontinued part		2	
11	999 059 027 02	Taper roller bearing		2	
12	928 332 217 02	O-ring		2	
13	928 332 219 00	adjusting washer 0,15 MM		X	
(13)	928 332 219 01	adjusting washer 0,20 MM		X	
(13)	928 332 219 02	adjusting washer 0,25 MM		X	
(13)	928 332 219 03	adjusting washer 0,30 MM		X	
(13)	928 332 219 04	adjusting washer 0,10 MM		X	
14	928 332 213 02	Bearing cover		2	
15	928 332 215 02	Shaft oil seal		2	
16	900 075 099 02	Hexagon bolt M 8 X 30 Discontinued part		12	
16	900 075 099 03	Hexagon bolt M 8 X 30		12	
17	N 012 241 1	Spring washer		6	
18	928 332 206 00	Drive flange		2	
19	900 074 292 02	Hexagon bolt M 10 X 98		2	

Model	Year	MG	SG	Illustration	Restrictions	UPD	7:11	27.10.2023
928	1978	3	12	312-000		738		

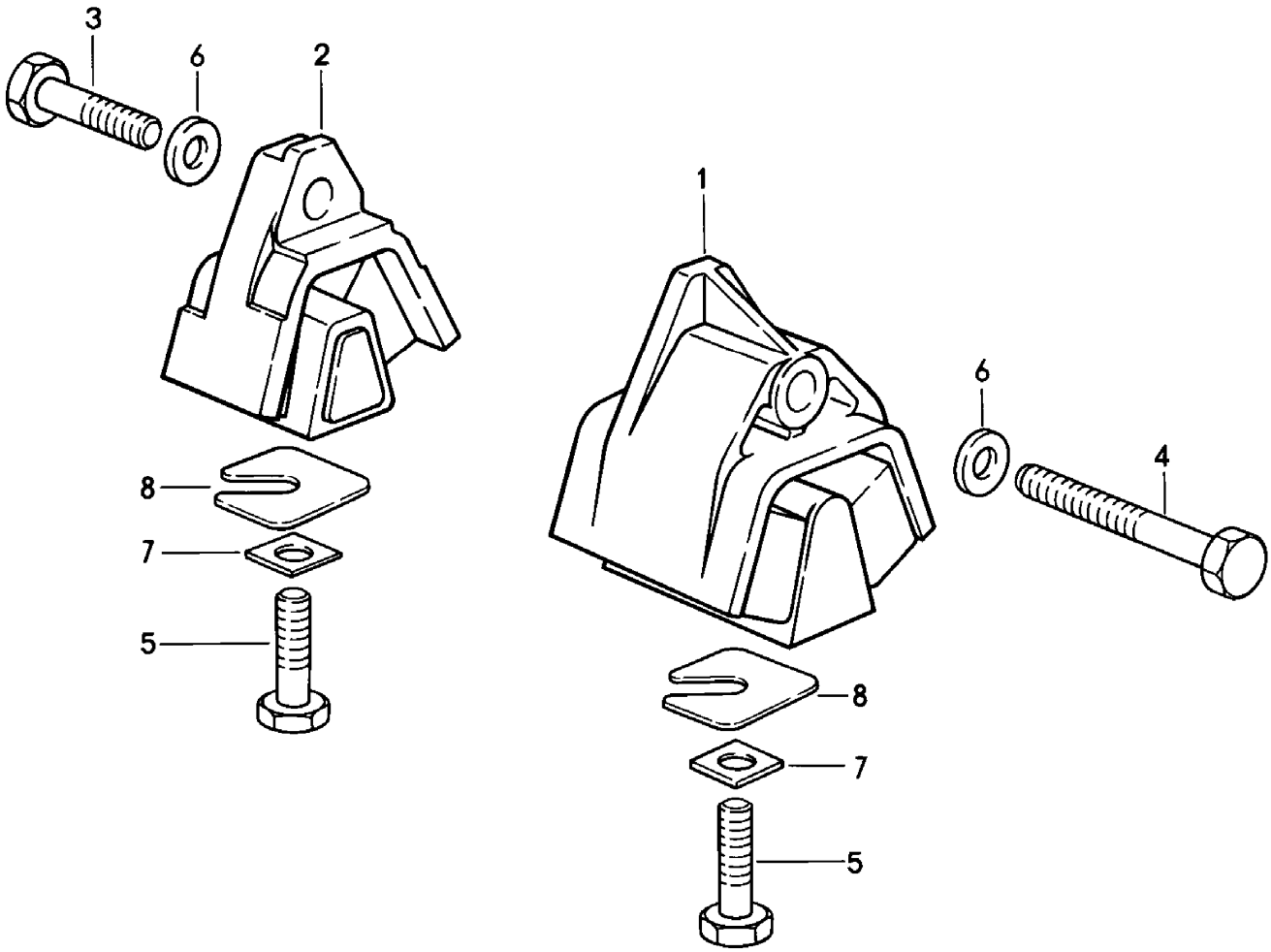

Model	Year	MG	SG	Illustration	Restrictions	UPD	7:11	27.10.2023
928	1978	3	12	312-000		738		

Pos	Part Number	Description	Remark	Qty	Model
		gearbox mounting Automatic gearbox			
1	928 375 045 13	gearbox mounting D >> - MJ 1978	left	1	
2	928 375 046 13	gearbox mounting D >> - MJ 1978	right	1	
(2)	928 375 045 16	gearbox mounting D >> - MJ 1979 Discontinued part		2	
(2)	928 375 045 16	gearbox mounting D - MJ 1980>>		2	
3	N 010 142 2	Hexagon bolt M 12 X 1,5 X 50 D >> - MJ 1978		1	
(3)	N 010 142 2	Hexagon bolt M 12 X 1,5 X 50 D - MJ 1979>>		2	
4	N 010 185 2	Hexagon bolt M 12 X 1,5 X 80 D >> - MJ 1978		1	
5	N 040 108 1	Hexagon bolt M 12 X 1,5 X 40		2	
6	901 333 143 01	Washer		2	
7	928 375 331 00	square washer		2	
8	928 331 520 01	Washer D - MJ 1980>>		X	
(8)	928 331 520 02	Washer D - MJ 1980>>		X	
(8)	928 331 520 03	Washer D - MJ 1980>>		X	
(8)	928 331 520 04	Washer D - MJ 1980>>		X	

Model	Year	MG	SG	Illustration	Restrictions	UPD	7:11	27.10.2023
928	1978	3	98	398-000		738		

Model	Year	MG	SG	Illustration	Restrictions	UPD	7:11	27.10.2023
928	1978	3	98	398-000		738		

Pos	Part Number	Description	Remark	Qty	Model
		Gasket set			
(1)	**928 300 901 00**	**Gasket set comprising: Discontinued part**		**1**	**G2803,G2805**
-	**928 303 120 01**	**Shaft oil seal**		**1**	
-	**928 301 111 00**	**O-ring**		**1**	
-	**928 301 111 01**	**O-ring**		**1**	
-	**928 302 167 03**	**Shaft oil seal Discontinued part**		**1**	
-	**928 302 167 05**	**Shaft oil seal**		**1**	
-	**928 302 283 00**	**O-ring**		**1**	
-	**928 301 393 04**	**Seal**		**1**	
-	**928 332 217 02**	**O-ring**		**2**	
-	**928 332 215 02**	**Shaft oil seal**		**2**	
-	**928 301 395 03**	**Seal**		**1**	
1	**928 300 901 01**	**Gasket set comprising:**		**1**	**G2803,G2805**
-	**928 301 111 00**	**O-ring**		**1**	
-	**928 301 111 01**	**O-ring**		**1**	
-	**928 301 393 07**	**Seal**		**1**	
-	**928 301 393 06**	**Seal**		**1**	
-	**928 301 395 03**	**Seal**		**1**	
-	**928 302 167 03**	**Shaft oil seal Discontinued part**		**1**	
-	**928 302 167 05**	**Shaft oil seal**		**1**	
-	**928 302 283 00**	**O-ring**		**1**	
-	**928 303 120 01**	**Shaft oil seal**		**1**	
-	**928 332 215 02**	**Shaft oil seal**		**2**	
-	**928 332 217 02**	**O-ring**		**2**	
-	**928 303 313 00**	**Seal**		**1**	
-	**928 302 283 01**	**O-ring**		**1**	
-	**999 701 904 40**	**O-ring**		**1**	

Model	Year	MG	SG	Illustration	Restrictions	UPD	7:11	27.10.2023
928	1978	3	98	398-000		738		

Pos	Part Number	Description	Remark	Qty	Model
-	928 116 901 00	repair set for Clutch slave cylinder		1	
-	922 300 901 00	Gasket set for Automatic gearbox without: Differential		1	
-		comprising:			
-	017 997 324 7	seal ring		1	
-	004 997 054 8	seal ring		1	
-	900 123 043 30	seal ring A 12 X 15,5		4	
-	115 277 338 0	Seal		1	
-	116 271 018 0	Seal		1	
-	002 997 214 8	seal ring		1	
-	900 123 019 30	seal ring A 16 X 22		1	
-	006 997 614 6	seal ring		1	
-	010 997 774 5	O-ring 19 X 1,8		1	
-	008 997 304 8	seal ring 12,5 X 1,5		1	
-	001 997 354 8	seal ring 6,5 X 1,5		1	
-	115 304 016 0	seal ring		1	
-	900 123 105 30	seal ring A 8 X 14		1	
-	002 997 574 8	seal ring		1	
-	100 272 045 5	seal ring		1	
-	109 272 099 2	Gaiter		1	
-	115 272 149 2	Gaiter		1	
-	115 272 065 5	seal ring		4	
-	115 272 079 2	Gaiter		1	
-	109 272 049 2	Gaiter		1	
-	115 272 169 2	Gaiter		1	
-	115 272 135 5	seal ring		3	

Model	Year	MG	SG	Illustration	Restrictions	UPD	7:11	27.10.2023
928	1978	3	98	398-000		738		

Pos	Part Number	Description	Remark	Qty	Model
-	922 321 301 07	seal ring		2	
-	922 302 401 00	O-ring 26,7 X 1,78		1	
-	922 302 402 01	O-ring 31 X 2		1	
-	000 997 484 8	seal ring		1	
-	115 277 075 5	seal ring		1	
-	115 272 119 2	Gaiter		1	
-	010 997 084 5	seal ring		2	
-	115 272 109 2	Gaiter		1	
-	000 997 474 8	seal ring		1	
-	115 272 089 2	Gaiter		1	
-	008 997 354 5	seal ring		1	
-	477 321 483 A	Seal		1	
-	922 321 537 00	O-ring		1	
2	922 300 902 00	Gasket set for Differential Automatic gearbox comprising: seal ring Seal Shaft oil seal O-ring		1 1 1 2 2	
3	123 270 009 8	Repair kit for oil filter comprising: oil filter		1 1	
-	115 271 158 0	gasket for oil sump Discontinued part		1	
-	115 271 168 0	gasket for oil sump		1	
-	900 123 007 30	seal ring for oil filler support		2	
-	900 123 033 20	seal ring for drain plug Converter		1	

Model	Year	MG	SG	Illustration	Restrictions	UPD	7:11	27.10.2023
928	1978	3	98	398-000		738		

Pos	Part Number	Description	Remark	Qty	Model
-	928 116 911 00	repair set Coupling comprising: Pressure plate Clutch plate Clutch plate release bearing D - MJ 1980>>		1 1 1 1 1	
4	PCG 043 210 12	Transmission fluid Porsche Classic 75W90 GL5 55L		1	
5	PCG 043 210 52	Transmission fluid Porsche Classic 75W90 GL5 1 L		1	
-	PCG 721 916 60	Filling pump for Transmission fluid	1000 ML	1	

Model	Year	MG	SG	Illustration	Restrictions	UPD	7:12	27.10.2023
928	1978	4	01	401-000		738		

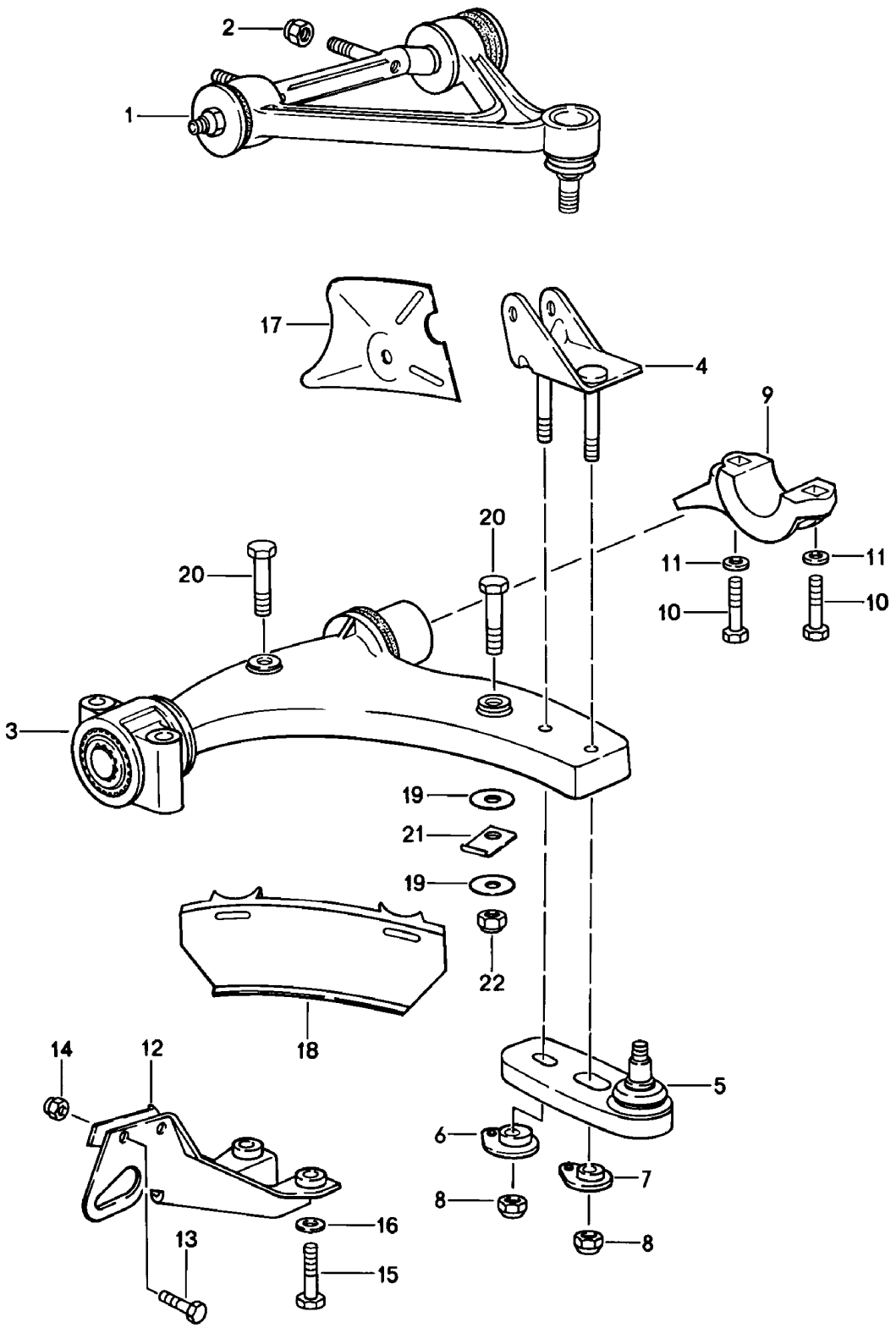

Model	Year	MG	SG	Illustration	Restrictions	UPD	7:12	27.10.2023
928	1978	4	01	401-000		738		

Pos	Part Number	Description	Remark	Qty	Model
		Wishbone See technical information GR. 4 NR. 1/84			
1	928 341 027 33	Wishbone	left upper	1	
(1)	928 341 028 33	Wishbone	right upper	1	
(1)	928 341 028 33	Wishbone	right upper	1	
2	900 910 094 02	Locknut		4	
3	928 341 017 02	Wishbone	lower	2	
4	928 341 091 05	arm	left	1	
(4)	928 341 092 05	arm	right	1	
5	928 341 049 10	Guide joint Discontinued part		2	
5	928 341 049 12	Guide joint		2	
6	928 341 466 00	Eccentric		2	
(7)	928 341 466 00	Eccentric		2	
8	N 022 141 4	hexagon nut, self-locking		4	
9	928 341 167 00	Mounting bar		2	
10	900 082 048 08	Hexagon bolt M 12 X 1,5 X 80 Discontinued part		4	
10	900 082 048 03	Hexagon bolt M 12 X 1,5 X 80		4	
11	928 341 165 00	Washer Discontinued part		4	
11	928 341 165 01	Washer		4	
12	928 341 064 02	protecive clip		1	
13	N 010 253 7	Hexagon bolt M 10 X 22		4	
14	900 910 031 09	Locknut		4	
14	900 910 031 01	Locknut		4	
15	900 082 039 02	Hexagon bolt M 12 X 1,5 X 100		4	
15	900 082 137 01	Hexagon bolt M 12 X 1,5 X 100		4	

Model	Year	MG	SG	Illustration	Restrictions	UPD	7:12	27.10.2023
928	1978	4	01	401-000		738		

Pos	Part Number	Description	Remark	Qty	Model
16	901 333 143 02	Washer		4	
17	928 341 383 01	guiding plate Discontinued part	left	1	928S
(17)	928 341 383 05	guiding plate	left	1	928S
(17)	928 341 384 01	guiding plate Discontinued part	right	1	928S
(17)	928 341 384 05	guiding plate	right	1	928S
18	928 341 389 01	Spoiler		2	928S
19	928 341 391 00	cup spacer		4	928S
20	N 010 367 4	Hexagon bolt M 6 X 60 Discontinued part		4	928S
20	900 074 021 03	Hexagon bolt M 6 X 60		4	928S
21	928 341 395 00	Retaining bracket		4	928S
22	900 910 012 02	Locknut M 6 Discontinued part		4	928S
22	900 910 047 09	Locknut M 6		4	928S

Model	Year	MG	SG	Illustration	Restrictions	UPD	7:12	27.10.2023
928	1978	4	01	401-005		738		

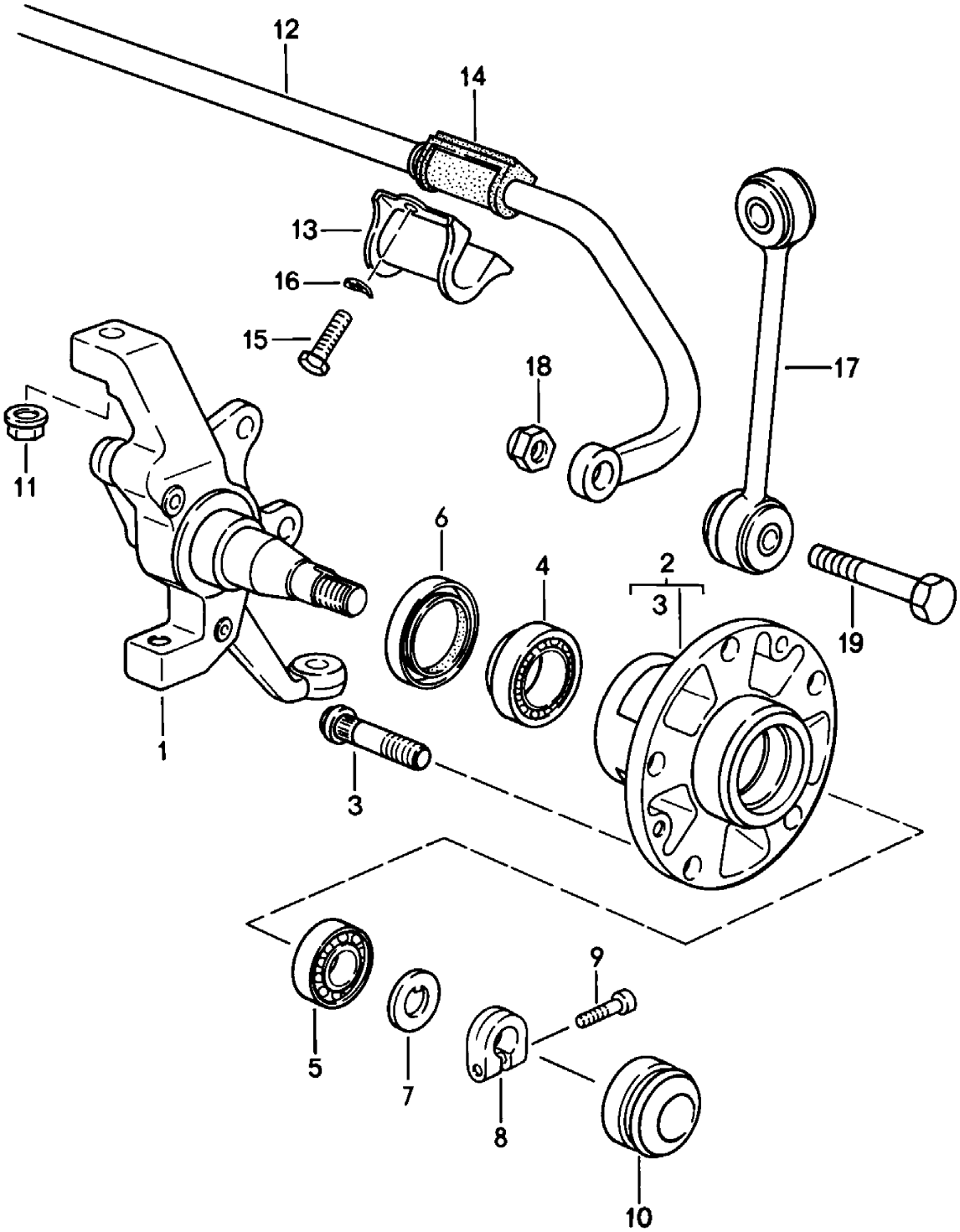

Model	Year	MG	SG	Illustration	Restrictions	UPD	7:12	27.10.2023
928	1978	4	01	401-005		738		

Pos	Part Number	Description	Remark	Qty	Model
		steering knuckle Anti-roll bar Front axle grease			
-	PCG 043 110 00	grease Mounting 200 GR.		1	
1	928 341 057 03	steering knuckle only in conj. with: floating caliper	left	1	928
(1)	928 341 058 03	steering knuckle only in conj. with: floating caliper	right	1	928
(1)	928 341 057 05	steering knuckle only in conj. with: Floating caliper brake D - MJ 1980>> Discontinued part	left	1	
(1)	928 341 058 05	steering knuckle only in conj. with: Floating caliper brake D - MJ 1980>> Discontinued part	right	1	
(1)	928 341 057 13	steering knuckle only in conj. with: Floating caliper brake D - MJ 1980>>	left	1	
(1)	928 341 058 13	steering knuckle only in conj. with: Floating caliper brake D - MJ 1980>>	right	1	
2	928 341 065 02	Front-wheel hub		2	
3	928 341 671 02	wheel mounting bolt		10	
(3)	928 341 671 02	wheel mounting bolt oversize		X	
4	999 059 090 00	Taper roller bearing also use:	 PCG04311000 477405641	2 1 2	
5	999 059 067 00	Taper roller bearing also use:	 PCG04311000	2 1	
6	477 405 641	Radial shaft seal		2	
7	911 341 663 00	pressure washer		2	
8	911 341 673 00	clamping nut also use:	 9991190010B	2 1	

Model	Year	MG	SG	Illustration	Restrictions	UPD	7:12	27.10.2023
928	1978	4	01	401-005		738		

Pos	Part Number	Description	Remark	Qty	Model
9	999 119 001 01	Socket head bolt M 7 X 18 Discontinued part		2	
9	999 119 001 0B	Socket head bolt M 7 X 18		2	
10	911 341 684 00	Cap		2	
11	900 380 010 09	Locknut M 12 X 1,5 D >> - MJ 1979		4	
(11)	999 084 059 02	Locknut M 12 X 1,5 D - MJ 1980>>		2	
12	928 343 073 05	Anti-roll bar 26 MM D >> - MJ 1979		1	
		also use:	92834379305	2	
(12)	928 343 073 05	Anti-roll bar 28 MM D - MJ 1980>>		1	
		also use:	92834379304	2	
13	928 343 777 00	clamp		2	
14	928 343 793 02	anti-roll bar bearing bracket 26 MM D >> - MJ 1979		2	
14	928 343 793 05	anti-roll bar bearing bracket 26 MM D >> - MJ 1979		2	
(14)	928 343 793 04	anti-roll bar bearing bracket 28 MM D - MJ 1980>>		2	
15	900 075 043 02	Hexagon bolt M 10 X 30		4	
(15)	N 010 275 3	Hexagon bolt M 10 X 35 Discontinued part	lhd	1	
(15)	900 075 460 01	Hexagon bolt M 10 X 35	lhd	1	
(15)	900 075 460 02	Hexagon bolt M 10 X 35	M10X35 yellow	1	
16	900 027 016 02	spring ring B 10 Discontinued part		4	
16	900 027 016 03	spring ring B 10		4	

Model	Year	MG	SG	Illustration	Restrictions	UPD	7:12	27.10.2023
928	1978	4	01	401-005		738		

Pos	Part Number	Description	Remark	Qty	Model
17	928 343 069 00	Coupling rod		2	
18	900 910 046 02	Locknut M 12 X 1,5 Discontinued part		2	
18	999 084 439 09	Locknut M 12 X 1,5 Discontinued part		2	
18	999 084 445 09	Locknut M 12 X 1,5 Discontinued part		2	
18	999 084 445 01	Locknut M 12 X 1,5		2	
19	900 082 035 02	Hexagon bolt M 12 X 1,5 X 60		2	

Model	Year	MG	SG	Illustration	Restrictions	UPD	7:12	27.10.2023
928	1978	4	02	402-000		738		

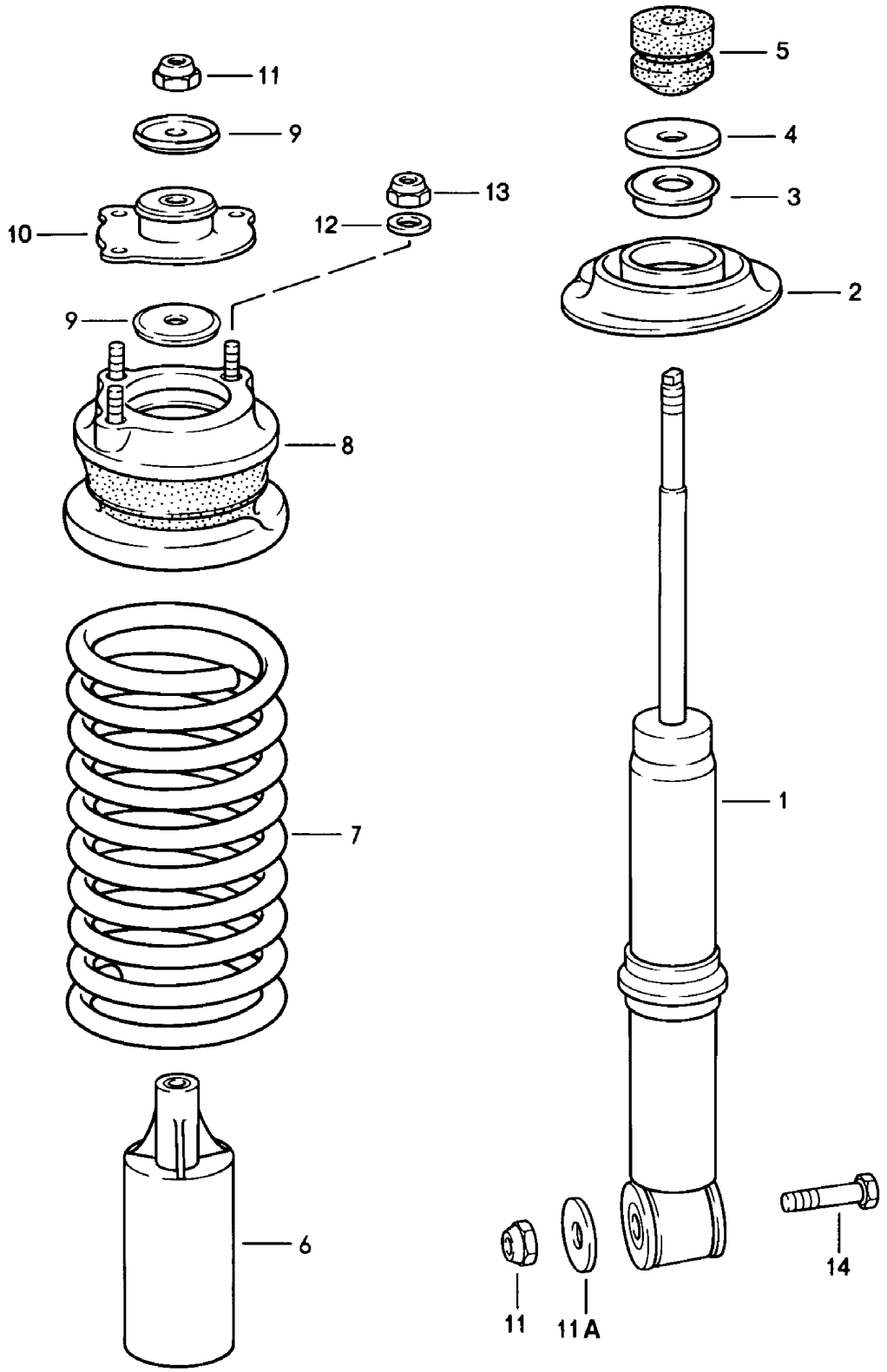

Model	Year	MG	SG	Illustration	Restrictions	UPD	7:12	27.10.2023
928	1978	4	02	402-000		738		

Pos	Part Number	Description	Remark	Qty	Model
		suspension Front axle			
1	928 343 055 04	vibration damper Conversion kit for sports suspension - BOGE - (use in pairs only) Front axle 92834305509 only in conj. with: Rear axle 92833305117 Discontinued part	BOGE VR/VL HR/HL	2 2 2	PR:474
(1)	928 343 055 09	vibration damper only in conj. with: Rear axle 92833305117 also use:	VR/VL BOGE HR/HL 92834305101 99908444501 92834304708 90091003101	2 2 2 4 2 6	PR:474
(1)	928 343 055 05	vibration damper D - MJ 1980>> also use:	BILSTEIN 92834305101 99908444501 92834304708 90091003101	2 2 4 2 6	PR:474
2	928 343 525 00	spring disc	lower	2	
-	928 343 533 00	Spacer ring		X	
3	928 333 551 00	Support sleeve for suspension struts		2	
4	911 333 511 00	Washer		2	
5	928 343 527 02	helper spring		2	
6	928 343 507 02	protective pipe		2	
7	928 343 511 01	Coil spring Identification: >> >> blue See technical information 4/NR. 7 F >> 92-A0800 645 F >> 92-A0820 127		2	
	08/77-07/82301	white			
	08/77-07/82302	white			
	08/77-07/82303	white only in conj. with:	BOGE		

Model	Year	MG	SG	Illustration	Restrictions	UPD	7:12	27.10.2023
928	1978	4	02	402-000		738		

Pos	Part Number	Description	Remark	Qty	Model
7	928 343 511 03	1 set springs Identification: >> >> white F 92-A0820 128>>		2	
	08/77-07/82901	white			
	08/77-07/82902	white only in conj. with:	BOGE		
(7)	928 343 511 04	1 set springs Discontinued part		1	
	08/77-07/82204	White/green only in conj. with: Damper Discontinued part	BILSTEIN		
(7)	928 343 511 13	1 set springs Identification: >> >> green white only in conj. with: Damper	BILSTEIN	1	
8	928 343 047 07	spring disc Discontinued part	upper	2	
8	928 343 047 08	spring disc	upper	2	
9	928 343 523 00	Washer		4	
10	928 343 051 01	Shock absorber bearing	upper	2	
11	900 910 046 02	Locknut Discontinued part		4	
11	999 084 439 09	Locknut Discontinued part		4	
11	999 084 445 09	Locknut Discontinued part		4	
11	999 084 445 01	Locknut		4	
11A	999 025 074 02	Washer D - MJ 1980>> Discontinued part		2	
11A	999 025 074 01	Washer D - MJ 1980>>		2	
12	900 025 008 09	Washer Discontinued part		6	
12	900 025 008 04	Washer		6	
12	900 025 008 0E	Washer	yellow	6	
13	900 910 031 09	Locknut		6	

Model	Year	MG	SG	Illustration	Restrictions	UPD	7:12	27.10.2023
928	1978	4	02	402-000		738		

Pos	Part Number	Description	Remark	Qty	Model
13	900 910 031 01	Locknut		6	
14	900 082 040 02	Hexagon bolt M 12 X 1,5 X 120		2	
(14)	900 082 044 02	Hexagon bolt M 12 X 1,5 X 125 D - MJ 1980>> Discontinued part		2	
(14)	900 082 118 01	Hexagon bolt M 12 X 1,5 X 125 D - MJ 1980>>		2	

Model	Year	MG	SG	Illustration	Restrictions	UPD	7:12	27.10.2023
928	1978	4	03	403-000		738		

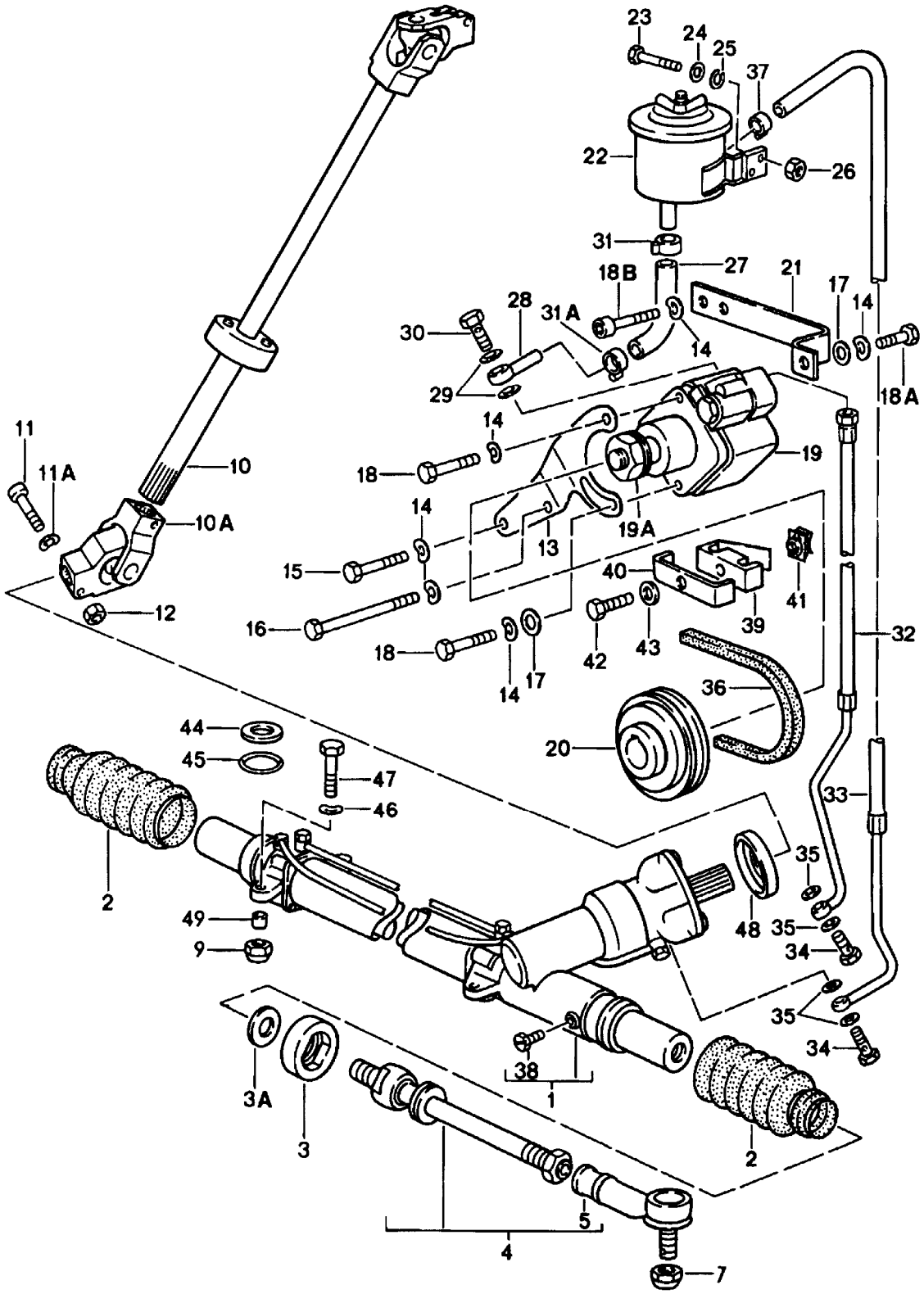

Model	Year	MG	SG	Illustration	Restrictions	UPD	7:12	27.10.2023
928	1978	4	03	403-000		738		

Pos	Part Number	Description	Remark	Qty	Model
		Steering gear Track rod See technical information NR-4/20			
1	928 347 010 22	Steering gear D >> - MJ 1981 Discontinued part	lhd	1	
(1)	928 347 010 24	Steering gear Discontinued part	lhd	1	
(1)	928 347 010 26	Steering gear Discontinued part	lhd	1	
(1)	928 347 010 27	Steering gear Discontinued part	lhd	1	
(1)	928 347 010 DX	Steering gear Discontinued part	lhd	1	
(1)	928 347 010 CX	Steering gear also use:	lhd 92834777903	1 4	
(1)	927 347 010 20	Steering gear D >> - MJ 1981 Discontinued part	rhd	1	
(1)	927 347 010 26	Steering gear	rhd	1	
2	928 347 191 03	Bellows		2	
3	928 347 329 00	Stop only in conj. with: 928.347.010.22 927.347.010.20 D >> - MJ 1981		2	
(3)	928 347 329 04	Stop only in conj. with: 928.347.010.24 927.347.010.22		2	
(3)	928 347 329 06	Stop only in conj. with: 928.347.010.24 927.347.010.22		2	
3A	928 347 331 00	Spacer ring only in conj. with: 928.347.010.22 927.347.010.20 D >> - MJ 1981		2	
4	928 347 031 01	Steering track rod Discontinued part		2	
4	928 347 031 10	Steering track rod		2	
5	928 347 322 02	ball joint		2	

Model	Year	MG	SG	Illustration	Restrictions	UPD	7:12	27.10.2023
928	1978	4	03	403-000		738		

Pos	Part Number	Description	Remark	Qty	Model
7	900 910 046 02	Locknut Discontinued part		2	
7	999 084 439 09	Locknut Discontinued part		2	
7	999 084 445 09	Locknut Discontinued part		2	
7	999 084 445 01	Locknut		2	
9	900 910 031 09	Locknut		4	
9	900 910 031 01	Locknut		4	
10	928 347 093 01	Intermediate steering shaft	lhd	1	
10	927 347 093 01	Intermediate steering shaft	rhd	1	
10A	928 347 021 04	universal joint		1	
11	928 347 128 01	Locating bolt		3	
11A	N 012 241 1	Spring washer		3	
12	900 910 022 02	Locknut		3	
(13)	928 347 443 07	Bracket		1	
14	N 012 241 8	Spring washer		7	
15	N 010 239 11	Hexagon bolt M 8 X 18 Discontinued part		1	
15	N 010 239 30	Hexagon bolt M 8 X 18		1	
16	900 074 050 02	Hexagon bolt M 8 X 120		1	
(16)	900 075 321 02	Screw		1	
17	900 025 007 02	Washer Discontinued part		2	
17	900 025 007 03	Washer		2	
18	900 075 085 02	Hexagon bolt M 8 X 20		2	
18A	900 074 139 02	Hexagon bolt M 8 X 55		1	
18A	900 074 139 03	Hexagon bolt M 8 X 55		1	
18B	900 119 052 02	Socket head bolt M 8 X 16		2	

Model	Year	MG	SG	Illustration	Restrictions	UPD	7:12	27.10.2023
928	1978	4	03	403-000		738		

Pos	Part Number	Description	Remark	Qty	Model
19	928 347 431 05	Vane pump Discontinued part		1	
-	928 347 431 EX	Vane pump		1	
-	928 347 921 00	repair set for Vane pump 928 347 431 05		1	
19A	900 910 094 02	Locknut M 14 X 1,5		1	
20	928 347 441 06	pulley for Vane pump 928.347.431.02 D - MJ 1978>> - MJ 1978		1	
(20)	928 347 441 08	pulley for Vane pump 928.347.431.04/05		1	
21	928 101 112 00	Brace		1	
22	928 347 015 01	oil container		1	
23	900 075 014 02	Hexagon bolt M 6 X 18 Discontinued part		2	
23	900 075 014 03	Hexagon bolt M 6 X 18		2	
-	928 501 817 02	Retaining bracket Pressure line		1	
-	928 501 817 02	Retaining bracket		1	
	08/77-07/82GRV	primed Pressure line			
24	900 151 003 02	Washer Discontinued part		2	
24	900 151 006 03	Washer		2	
25	N 012 007 2	spring ring A 6 Discontinued part		2	
25	900 027 004 03	spring ring A 6		2	
26	900 076 010 02	Nut Discontinued part		2	
26	900 076 010 0B	Nut		2	
26	900 076 010 03	Nut		2	

Model	Year	MG	SG	Illustration	Restrictions	UPD	7:12	27.10.2023
928	1978	4	03	403-000		738		

Pos	Part Number	Description	Remark	Qty	Model
27	928 347 445 00	Molded hose Discontinued part		1	
27	928 347 445 01	Molded hose		1	
28	999 230 077 02	Connection nipple		1	
29	N 013 832 2	seal ring		2	
30	900 134 010 02	Banjo bolt		1	
31	999 512 297 02	Hose clamp		1	
31A	999 512 298 02	Hose clamp		1	
32	928 347 447 02	Pressure line	lhd	1	
(32)	927 347 447 01	Pressure line	rhd	1	
33	928 347 449 02	return line	lhd	1	
(33)	927 347 449 01	return line	rhd	1	
-		Fasteners Pressure line return line Engine brackets			
-	900 067 008 02	Socket head bolt M 6 X 12 Discontinued part	rhd	1	
-	900 067 008 03	Socket head bolt M 6 X 12	rhd	1	
-	N 011 524 7	Washer Discontinued part	rhd	1	
-	N 011 524 27	Washer	rhd	1	
34	900 134 007 02	Banjo bolt Discontinued part		2	
34	900 134 007 01	Banjo bolt		2	
34	PCG 134 007 01	Banjo bolt		2	
35	900 123 042 20	seal ring		4	
36	999 192 128 50	v-belt 12,5 X 978		1	
37	N 023 569 2	Hose clamp Discontinued part		1	
37	PCG 023 569 2	Hose clamp		1	
38	999 063 002 40	sealing plug AM 12 X 1,5 D >> - MJ 1981		1	

Model	Year	MG	SG	Illustration	Restrictions	UPD	7:12	27.10.2023
928	1978	4	03	403-000		738		

Pos	Part Number	Description	Remark	Qty	Model
39	999 511 121 40	Clamp		1	
40	928 347 455 00	Insert		1	
(41)	999 507 003 02	panel nut D - MJ 1981>> Discontinued part		1	
(41)	999 507 003 01	panel nut D - MJ 1981>>		1	
(42)	900 187 032 02	panel screw B 6,3 X 32 D - MJ 1981>>		1	
41	999 507 328 02	Cage nut D >> - MJ 1980 Discontinued part		1	
41	999 507 328 0B	Cage nut		1	
42	N 010 220 3	Hexagon bolt M 6 X 30 D >> - MJ 1980		1	
43	N 011 524 7	Washer Discontinued part		1	
43	N 011 524 27	Washer		1	
44	928 375 192 00	Washer F >> 92-88100 468		4	
45	999 701 600 40	O-ring F >> 92-88100 468		4	
46	900 028 005 02	Spring washer -A 10-		4	
47	N 010 445 2	Hexagon bolt M 10 X 45 Discontinued part	lhd	4	
47	900 074 372 01	Hexagon bolt M 10 X 45	lhd	4	
(47)	N 010 445 2	Hexagon bolt M 10 X 45 Discontinued part	rhd	3	
(47)	900 074 372 01	Hexagon bolt M 10 X 45	rhd	3	
(47)	N 010 450 5	Hexagon bolt M 10 X 50 Discontinued part	rhd	1	
(47)	900 074 373 02	Hexagon bolt M 10 X 50	rhd	1	
48	928 347 923 00	Protective cap		1	

Model	Year	MG	SG	Illustration	Restrictions	UPD	7:12	27.10.2023
928	1978	4	03	403-000		738		

Pos	Part Number	Description	Remark	Qty	Model
49	**928 347 779 03**	**bush**		**4**	

Model	Year	MG	SG	Illustration	Restrictions	UPD	7:13	27.10.2023
928	1978	4	03	403-005		738		

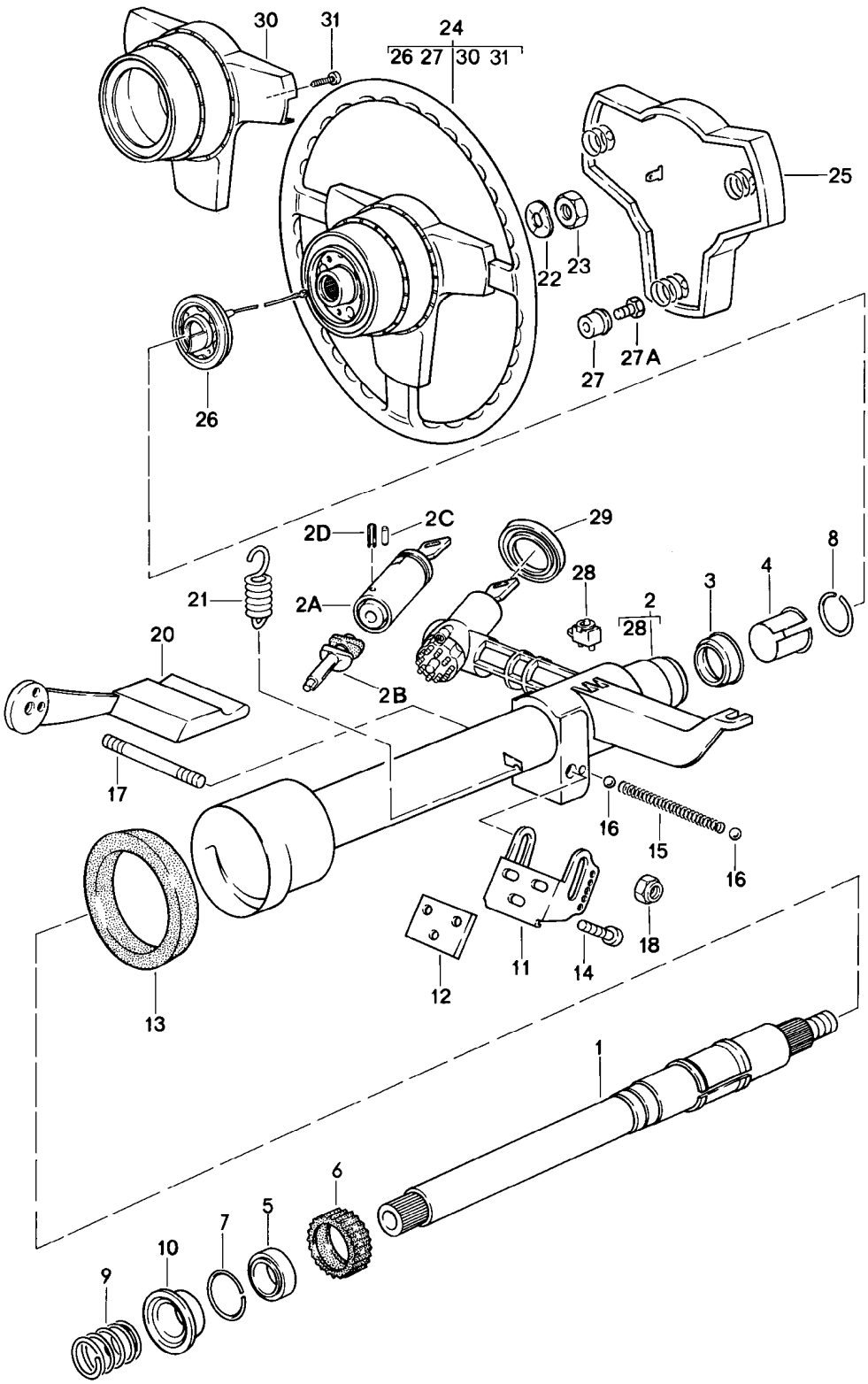

Model	Year	MG	SG	Illustration	Restrictions	UPD	7:13	27.10.2023
928	1978	4	03	403-005		738		

Pos	Part Number	Description	Remark	Qty	Model
		Steering steering wheel			
1	928 347 061 06	Intermediate steering shaft		1	
2	928 347 903 02	steering lock with: Steering protective pipe key W/o stipulated lock number	1 pc	1	
(2)	928 347 903 03	steering lock Steering protective pipe key When ordering, please provide the vehicle identification and the lock number	1 pc	1	
2A	928 347 915 01	Lock cylinders for steering lock key W/o stipulated lock number	1 pc	1	
2A	928 347 917 01	Lock cylinders for steering lock key with stipulated lock number	1 pc	1	
-		key See main group 8 8/04/05 POS.53/1			
-		Ignition/starter switch See main group 9 (Electrics) 9/01/00 POS.29			
2B	928 347 919 00	Control cams		1	
2B	928 347 755 02	Control cams also use:		1	
-	928 347 962 00	Intermediate piece		1	
-	900 015 030 02	Intermediate piece		2	
2C	900 091 001 00	Slotted pin		1	
2D	900 095 007 00	spring pin 3 X 12		1	
3	928 347 791 00	steering column bearing		1	
4	928 347 739 02	Thrust ring		1	
5	928 347 735 01	steering column bearing D >> - MJ 1981		1	

Model	Year	MG	SG	Illustration	Restrictions	UPD	7:13	27.10.2023
928	1978	4	03	403-005		738		

Pos	Part Number	Description	Remark	Qty	Model
6	928 347 607 02	bush D >> - MJ 1981		1	
7	900 906 015 00	snap ring D >> - MJ 1981		1	
8	113 415 531	snap ring		1	
9	928 347 213 04	Pressure spring		1	
-	N 027 416 1	fitted washer 0,5 MM		X	
-	N 100 512 01	fitted washer 1,5 MM		X	
10	928 347 241 01	steering column bearing		1	
11	928 347 369 04	Console		1	
12	928 347 370 01	Underlay		X	
(12)	928 347 370 02	Underlay		X	
(12)	928 347 370 03	Underlay		X	
13	928 347 659 02	seal ring Discontinued part		1	
13	928 347 659 02	seal ring		1	
(14)	N 014 782 1	Socket head bolt with hexagon socket head M 6 X 25		3	
15	928 347 375 01	Pressure spring		1	
16	900 108 020 00	ball		2	
17	928 347 259 02	Threaded stud		1	
18	900 910 022 02	Locknut		2	
20	928 347 033 02	retaining lever		1	
21	928 347 377 03	tension spring		1	
22	N 012 239 1	Spring washer		1	
23	900 078 007 02	Hexagon nut M 18 X 1,5		1	
24	928 347 084 01	steering wheel D >> - MJ 1979 Discontinued part		1	928
	08/77-07/7970B	Black			
-	928 347 084 03	steering wheel		1	928
	08/77-07/8270B	Black			

Model	Year	MG	SG	Illustration	Restrictions	UPD	7:13	27.10.2023
928	1978	4	03	403-005		738		

Pos	Part Number	Description	Remark	Qty	Model
-	928 347 084 02	steering wheel		1	
	08/77-07/821RN	Medium brown			
	08/77-07/821AJ	Black			
	08/77-07/822LB	wine red			
25	911 347 859 00	Cover cap for steering wheel		1	928
	08/77-07/8270B	Black			
-	928 347 087 00	Cover cap for steering wheel		1	
	08/77-07/821RN	Medium brown			
	08/77-07/822LB	wine red			
26	928 347 099 00	Slip ring		1	
27	321 419 779	Insulating bush for 928 347 084 03		3	
27	321 419 779 A	Insulating bush for 928 347 084 02		4	
27A	900 075 230 10	Hexagon bolt M 4 X 16		X	
29	928 347 913 00	Rubber gaiter		1	
30	928 347 085 00	Trim for hub		1	
	08/77-07/8270B	Black			
-	928 347 857 02	Trim		1	
	08/77-07/822LB	wine red			
	08/77-07/821RN	Medium brown			
31	900 146 029 02	fillister hd. bolt M 3,5 X 10		6	

Model	Year	MG	SG	Illustration	Restrictions	UPD	7:13	27.10.2023
928	1978	4	98	498-000		738		

Pos	Part Number	Description	Remark	Qty	Model
		repair kits			
-	**928 347 921 00**	**repair set** **for** **Vane pump** **928.347.431.05** **comprising:** **seal ring** **seal ring** **Thrust ring**	**front** **inner**	**X** **1** **2** **2**	

Model	Year	MG	SG	Illustration	Restrictions	UPD	7:13	27.10.2023
928	1978	5	01	501-000		738		

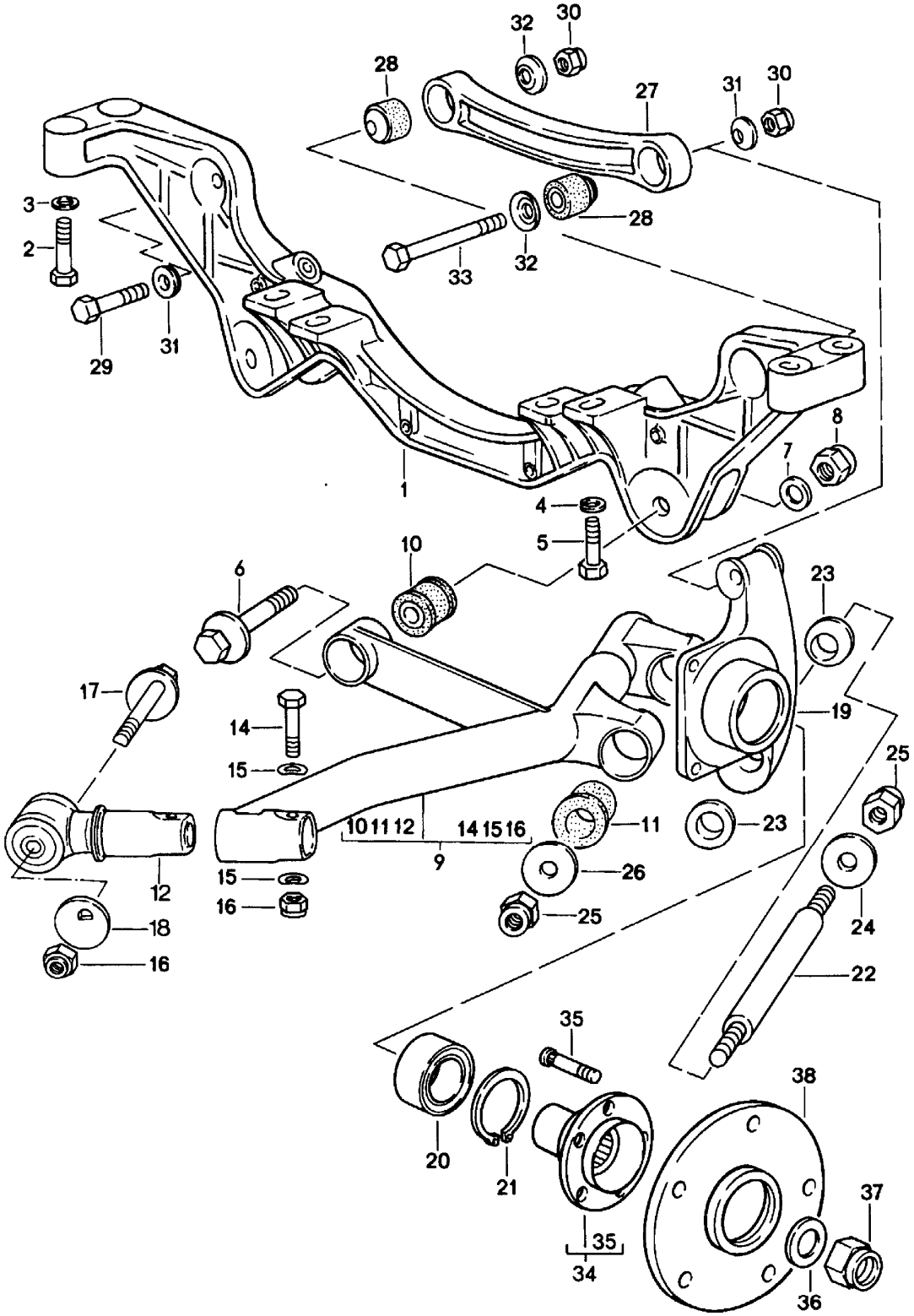

Model	Year	MG	SG	Illustration	Restrictions	UPD	7:13	27.10.2023
928	1978	5	01	501-000		738		

Pos	Part Number	Description	Remark	Qty	Model
		Rear axle			
1	928 331 131 17	Cross member w/ axle support D >> - MJ 1979 Discontinued part		1	
(1)	928 331 131 17	Cross member w/ axle support D >> - MJ 1979		1	
(1)	928 331 131 13	Cross member w/ axle support only in conj. with: G.28.03 Discontinued part		1	928
(1)	928 331 131 17	Cross member w/ axle support only in conj. with: G.28.03 D - MJ 1980>> Discontinued part		1	
(1)	928 331 131 17	Cross member w/ axle support only in conj. with: G.28.03 D - MJ 1980>>		1	
(1)	928 331 131 13	Cross member w/ axle support Discontinued part		1	PR:249
(1)	928 331 131 17	Cross member w/ axle support Discontinued part		1	PR:249
(1)	928 331 131 17	Cross member w/ axle support		1	PR:249
(1)	928 331 131 14	Cross member w/ axle support only in conj. with: G.28.05 D - MJ 1980>> Discontinued part		1	
(1)	928 331 131 18	Cross member w/ axle support only in conj. with: G.28.05 D - MJ 1980>> Discontinued part		1	
(1)	928 331 131 18	Cross member w/ axle support only in conj. with: G.28.05 D - MJ 1980>>		1	
2	N 010 473 6	Hexagon bolt M 10 X 75		4	
-	928 331 133 00	Washer		X	
3	900 223 011 01	Washer Discontinued part		6	
3	900 223 011 02	Washer		6	

Model	Year	MG	SG	Illustration	Restrictions	UPD	7:13	27.10.2023
928	1978	5	01	501-000		738		

Pos	Part Number	Description	Remark	Qty	Model
4	900 027 016 02	spring ring B 10 Discontinued part		2	
4	900 027 016 03	spring ring B 10		2	
5	N 010 445 3	Hexagon bolt M 10 X 45		2	
6	928 331 075 04	Eccentric bolt		2	
7	928 331 581 00	Washer		2	
8	900 910 094 02	Locknut		2	
9	928 331 043 03	Guide D >> - MJ 1979 Discontinued part	left lower	1	
9	928 331 043 06	Guide D - MJ 1980>>	left lower	1	
(9)	928 331 044 03	Guide D >> - MJ 1979 Discontinued part	right lower	1	
(9)	928 331 044 06	Guide D - MJ 1980>>	right lower	1	
10	928 331 588 10	Rubber bush		2	
11	928 331 588 13	Rubber bush Discontinued part		4	
11	928 331 588 15	Rubber bush		4	
12	928 331 085 00	bearing bracket for rear axle		2	
14	900 082 140 01	Hexagon bolt M 12 X 1,5 X 75		2	
15	900 028 014 02	Spring washer Discontinued part		4	
15	900 028 014 03	Spring washer		4	
16	N 022 141 4	hexagon nut, self-locking		4	
17	928 331 659 04	Eccentric bolt		2	
18	928 331 523 12	eccentric washer		2	
19	928 331 219 07	Wheel carrier F >> 92-CS820 792 Discontinued part	left	1	

Model	Year	MG	SG	Illustration	Restrictions	UPD	7:13	27.10.2023
928	1978	5	01	501-000		738		

Pos	Part Number	Description	Remark	Qty	Model
19	928 331 219 07	Wheel carrier F >> 92-CS820 792	left	1	
(19)	928 331 219 03	Wheel carrier F 92-CS820 793>>	left	1	
(19)	928 331 220 07	Wheel carrier F >> 92-CS820 792 Discontinued part	right	1	
(19)	928 331 220 07	Wheel carrier F >> 92-CS820 792	right	1	
(19)	928 331 220 03	Wheel carrier F 92-CS820 793>>	right	1	
20	928 331 583 00	angular ball bearing Discontinued part		2	
(20)	999 053 050 00	angular ball bearing Discontinued part		2	
(20)	999 053 055 02	angular ball bearing		2	
21	900 042 030 02	Securing ring		2	
22	928 331 641 01	bearing pin		2	
23	928 331 655 06	Conical ring		4	
24	928 331 647 02	Washer		2	
25	900 910 094 02	Locknut		4	
26	928 331 647 00	Washer		4	
27	928 331 101 02	Guide	upper	2	
28	928 331 089 02	Rubber bush Discontinued part	upper	4	
28	928 331 089 04	Rubber bush	upper	4	
29	900 074 065 02	Hexagon bolt M 10 X 70		2	
30	900 910 031 09	Locknut		4	
30	900 910 031 01	Locknut		4	
32	928 331 575 01	Conical ring		4	
31	928 331 649 02	Conical ring		2	
33	N 010 482 3	Hexagon bolt M 10 X 105		2	
34	928 331 065 01	Wheel hub Discontinued part		2	

Model	Year	MG	SG	Illustration	Restrictions	UPD	7:13	27.10.2023
928	1978	5	01	501-000		738		

Pos	Part Number	Description	Remark	Qty	Model
(34)	928 331 065 07	Wheel hub with: wheel mounting bolt	rear	2	
35	928 341 671 02	wheel mounting bolt		10	
(35)	901 331 671 01	wheel mounting bolt Distance piece		X	
36	928 331 591 02	Washer		2	
37	900 910 093 02	Locknut		2	
38	477 501 701	Spacer ring		X	

Model	Year	MG	SG	Illustration	Restrictions	UPD	7:13	27.10.2023
928	1978	5	02	502-000		738		

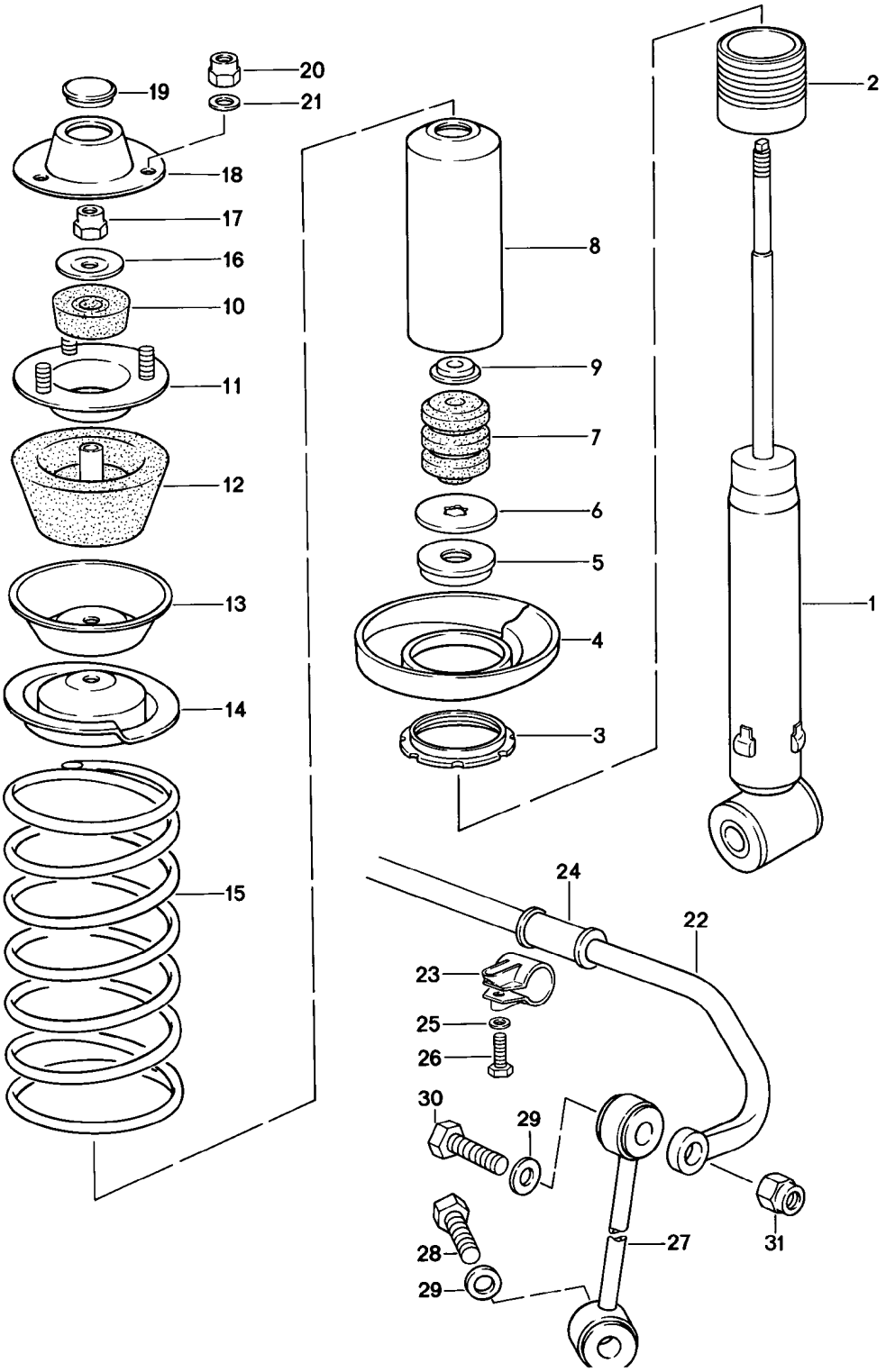

Model	Year	MG	SG	Illustration	Restrictions	UPD	7:13	27.10.2023
928	1978	5	02	502-000		738		

Pos	Part Number	Description	Remark	Qty	Model
		suspension Anti-roll bar	rear		
1	928 333 051 08	vibration damper also use:	BOGE 99908444501 90091003101	2 2 2	
(1)	928 333 051 17	vibration damper only in conj. with: Front axle 92834305509 also use:	HR/HL BOGE VR/VL 99908444501 90091003101	2 2 2 2	PR:474
(1)	928 333 051 12	vibration damper D - MJ 1980>> also use:	BILSTEIN 99908444501 90091003101	2 2 2	PR:474
2	928 333 511 05	Threaded bush		2	
3	928 333 513 02	adjusting nut	BOGE	2	
(3)	928 333 513 01	adjusting nut D - MJ 1980>>	BILSTEIN	2	
4	928 333 521 02	spring disc	lower	2	
5	928 333 551 00	Support sleeve for suspension struts		2	
6	911 333 511 00	Washer		2	
7	928 333 518 10	helper spring		2	
8	928 333 502 01	protective pipe		2	
9	928 333 517 01	Retaining ring		2	
10	928 333 465 01	Damping rubber		2	
11	928 333 064 00	Fixing plate		2	
12	928 333 043 00	rubber support ring Discontinued part		2	
12	928 333 043 01	rubber support ring		2	
13	928 333 436 00	Cup washer		2	
14	928 333 522 04	spring disc	upper	2	
15	928 333 531 09	Coil spring Identification: >> >> green D >> - MJ 1978		2	
	08/77-07/78201	yellow			
	08/77-07/78202	yellow			

Model	Year	MG	SG	Illustration	Restrictions	UPD	7:13	27.10.2023
928	1978	5	02	502-000		738		

Pos	Part Number	Description	Remark	Qty	Model
	08/77-07/78203	yellow			
(15)	928 333 531 12	1 set springs Identification: >> >> yellow D - MJ 1979>>		2	
	08/78-07/82101	yellow			
	08/78-07/82102	yellow			
	08/78-07/82103	yellow			
16	928 333 525 01	Washer		2	
17	900 910 046 02	Locknut Discontinued part		2	
17	999 084 439 09	Locknut Discontinued part		2	
17	999 084 445 09	Locknut Discontinued part		2	
17	999 084 445 01	Locknut		2	
18	928 333 151 01	Cover Discontinued part		2	
18	928 333 151 02	Cover		2	
19	999 703 131 40	End cap		2	
20	900 910 031 09	Locknut		6	
20	900 910 031 01	Locknut		6	
21	900 025 008 09	Washer Discontinued part		6	
21	900 025 008 04	Washer		6	
21	900 025 008 0E	Washer	yellow	6	
22	928 333 701 31	Anti-roll bar 21 MM F >> 92-BS800 250 F >> 92-BS840 422		1	
22	928 333 701 34	Anti-roll bar 22 MM F 92-BS800 251>> F 92-BS840 423>>		1	
		also use:	92833375426	2	
23	928 333 085 00	Clamp		2	
24	928 333 754 31	Rubber bush 21 MM		2	

Model	Year	MG	SG	Illustration	Restrictions	UPD	7:13	27.10.2023
928	1978	5	02	502-000		738		

Pos	Part Number	Description	Remark	Qty	Model
24	928 333 754 26	Mounting 22 MM		2	
25	477 407 425	Washer		2	
26	N 010 472 4	Hexagon bolt M 10 X 85 Discontinued part		2	
26	900 074 375 01	Hexagon bolt M 10 X 85		2	
27	928 333 059 01	Coupling rod Discontinued part	left	1	
27	928 333 059 02	Coupling rod	left	1	
(27)	928 333 060 01	Coupling rod Discontinued part	right	1	
(27)	928 333 060 02	Coupling rod	right	1	
28	N 010 445 2	Hexagon bolt M 10 X 45 Discontinued part		2	
28	900 074 372 01	Hexagon bolt M 10 X 45		2	
29	928 333 761 00	Washer		4	
30	900 074 063 02	Hexagon bolt M 10 X 55		2	
30	900 074 380 01	Hexagon bolt M 10 X 55		2	
31	900 910 031 09	Locknut		2	
31	900 910 031 01	Locknut		2	

Model	Year	MG	SG	Illustration	Restrictions	UPD	7:14	27.10.2023
928	1978	5	02	502-005		738		

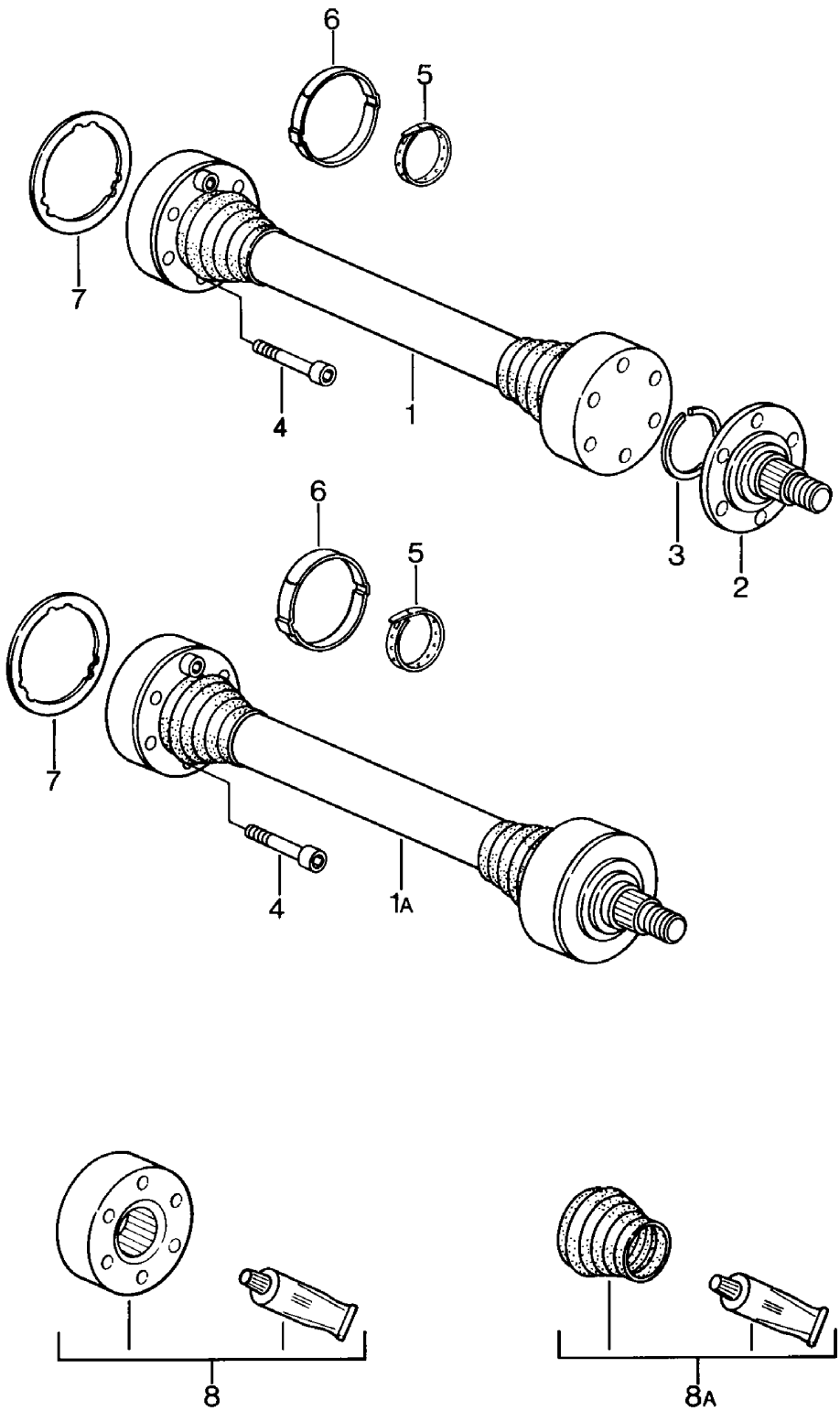

Model	Year	MG	SG	Illustration	Restrictions	UPD	7:14	27.10.2023
928	1978	5	02	502-005		738		

Pos	Part Number	Description	Remark	Qty	Model
		Drive shaft			
1	928 332 033 30	Drive shaft D >> - MJ 1981		2	
1A	928 332 033 30	Drive shaft		2	
2	928 332 026 03	Input shaft D >> - MJ 1981		2	
3	999 152 084 01	Securing ring		4	
(3)	999 152 084 01	Securing ring D - MJ 1982>> - MJ 1982		2	
4	900 067 168 01	Socket head bolt M 10 X 57		24	
(4)	900 067 168 01	Socket head bolt M 10 X 57 D - MJ 1982>> - MJ 1982		8	
5	928 332 257 00	terminal D >> - MJ 1981		4	
(5)	928 332 257 01	terminal D - MJ 1982>> - MJ 1982		2	
6	999 512 315 02	Ear crimp hose clamp Discontinued part		2	
6	999 512 486 00	terminal		2	
7	930 332 297 00	Seal D >> - MJ 1981		6	
(7)	930 332 297 00	Seal D - MJ 1982>> - MJ 1982		2	
8A	928 332 922 00	repair set Discontinued part		X	
8A	928 332 922 01	repair set D >> - MJ 1981		X	
8	928 332 923 00	repair set		X	
8	928 332 923 02	repair set		X	
(8A)	928 332 924 00	repair set D - MJ 1982>> - MJ 1982		X	

Model	Year	MG	SG	Illustration	Restrictions	UPD	7:14	27.10.2023
928	1978	5	98	598-000		738		

Pos	Part Number	Description	Remark	Qty	Model
		repair kits			
-	**928 332 922 00**	**repair set** **for** **Drive shaft** **928.332.033.17** **comprising:** **joint boot** **Discontinued part**		**X** **1**	
-	**000 043 005 00**	**grease** **90 G**		**1**	
-	**928 332 922 01**	**repair set** **for** **Drive shaft** **928.332.033.17** **comprising:** **joint boot** **Grease for universal** **joint** **clamp** **Hose clip** **snap ring**		**X** **1** **1** **1** **1** **1**	
-	**928 332 923 00**	**repair set** **for** **Drive shaft** **928.332.033.17/30** **comprising:** **constant velocity joint**		**X** **1**	
-	**928 332 923 02**	**repair set** **for** **Drive shaft** **928.332.033.17/30** **comprising:** **constant velocity joint**		**X** **1**	

Model	Year	MG	SG	Illustration	Restrictions	UPD	7:14	27.10.2023
928	1978	6	01	601-000		738		

Model	Year	MG	SG	Illustration	Restrictions	UPD	7:14	27.10.2023
928	1978	6	01	601-000		738		

Pos	Part Number	Description	Remark	Qty	Model
		Alloy wheel			
1	928 361 916 00	Alloy wheel 7 J X 16 D >> - MJ 1979	matt	4	
(1)	928 361 016 00	Alloy wheel 7 J X 16 Clear D - MJ 1980>>		4	
(1)	928 361 919 00	Alloy wheel 7 J X 15 D >> - MJ 1979	silver matt	4	
(1)	928 361 019 00	Alloy wheel 7 J X 15 Clear D - MJ 1980>>		4	
(1)	928 362 114 20	Alloy wheel 7 J X 16 for winter use		4	
2	928 362 115 01	Alloy wheel 7 J X 16 D - MJ 1980>>	forged	4	
(2)	928 361 021 08	Alloy wheel 7 J X 16 D - MJ 1982>> - MJ 1982	painted	4	PR:406
3	928 361 032 01	Hub cap Not for: Alloy wheel 928.361.021.05 Discontinued part		4	
3	928 361 032 05	Hub cap Not for: Alloy wheel 928.361.021.05		4	
4	PCG 361 032 01	Hub cap Not for: Alloy wheel 928.361.021.05 Porsche crest Black		4	
4	PCG 361 032 02	Hub cap Not for: Alloy wheel 928.361.021.05 Porsche crest Black		4	

Model	Year	MG	SG	Illustration	Restrictions	UPD	7:14	27.10.2023
928	1978	6	01	601-000		738		

Pos	Part Number	Description	Remark	Qty	Model
5	477 601 051 D	Hub cap for Alloy wheel 928.361.021.05 Platinum-metallic D - MJ 1980>> Discontinued part		4	
5	477 601 051 G	Hub cap for Alloy wheel 928.361.021.05 Platinum-metallic D - MJ 1980>>		4	
(5)	928 361 032 04	Hub cap for Alloy wheel 928 361 021 08 D - MJ 1982>> - MJ 1982		4	PR:406
(6)	928 362 030 02	Spare wheel 5 J X 15 D >> - MJ 1979		1	
(6)	928 361 008 02	Spare wheel 5 J X 15 D - MJ 1980>>		1	
(7)	928 361 047 03	Wheel nut Discontinued part	lockable	X	
(7)	965 361 955 00	Wheel nut Discontinued part	lockable	X	
(7)	968 361 955 00	Wheel nut Discontinued part	lockable	X	
7	993 361 057 00	Rim coded bolt set with adapter	lockable	X	
8	999 182 003 36	Wheel nut		20	
9	928 361 310 00	Cover cap		X	
10	901 361 410 00	Balancer weight (self-adhesive) 10 G		X	
(10)	901 361 411 00	Balancer weight (self-adhesive) 20 G		X	
(10)	901 361 412 00	Balancer weight (self-adhesive) 30 G		X	

Model	Year	MG	SG	Illustration	Restrictions	UPD	7:14	27.10.2023
928	1978	6	01	601-000		738		

Pos	Part Number	Description	Remark	Qty	Model
(10)	901 361 413 00	Balancer weight (self-adhesive) 40 G		X	
(10)	901 361 414 00	Balancer weight (self-adhesive) 50 G		X	
(10)	901 361 415 00	Balancer weight (self-adhesive) 60 G		X	
(10)	901 361 416 00	Balancer weight (self-adhesive) 70 G		X	
(10)	901 361 417 00	Balancer weight (self-adhesive) 80 G		X	
11		Balancer weight	Coated	X	
(11)	928 361 410 00	Balancer weight 10 G		X	
(11)	928 361 411 00	Balancer weight 20 G		X	
(11)	928 361 412 00	Balancer weight 30 G		X	
(11)	928 361 413 00	Balancer weight 40 G		X	
(11)	928 361 414 00	Balancer weight 50 G		X	
(11)	928 361 415 00	Balancer weight 60 G		X	
(11)	928 361 416 00	Balancer weight 70 G		X	
(11)	928 361 417 00	Balancer weight 80 G		X	
12	928 361 420 01	Retaining clip Balancer weight		X	
13	900 265 001 51	Rubber valve Discontinued part		4	
13	311 601 361	Rubber valve		4	
-	911 361 510 02	Air compressor Discontinued part		1	
-	911 361 510 03	breakdown set with compressor		1	
14	965 361 561 00	Support Valve		1	

Model	Year	MG	SG	Illustration	Restrictions	UPD	7:14	27.10.2023
928	1978	6	01	601-000		738		

Pos	Part Number	Description	Remark	Qty	Model
15	911 722 202 00	Tyre pressure gauge Porsche Classic With leather case		1	
-	996 361 521 00	Protective sleeve for Complete wheel	white	1	
-	911 361 522 00	Mask film		1	
-	999 914 001 40	Protective gloves		1	

Model	Year	MG	SG	Illustration	Restrictions	UPD	7:14	27.10.2023
928	1978	6	02	602-000		738		

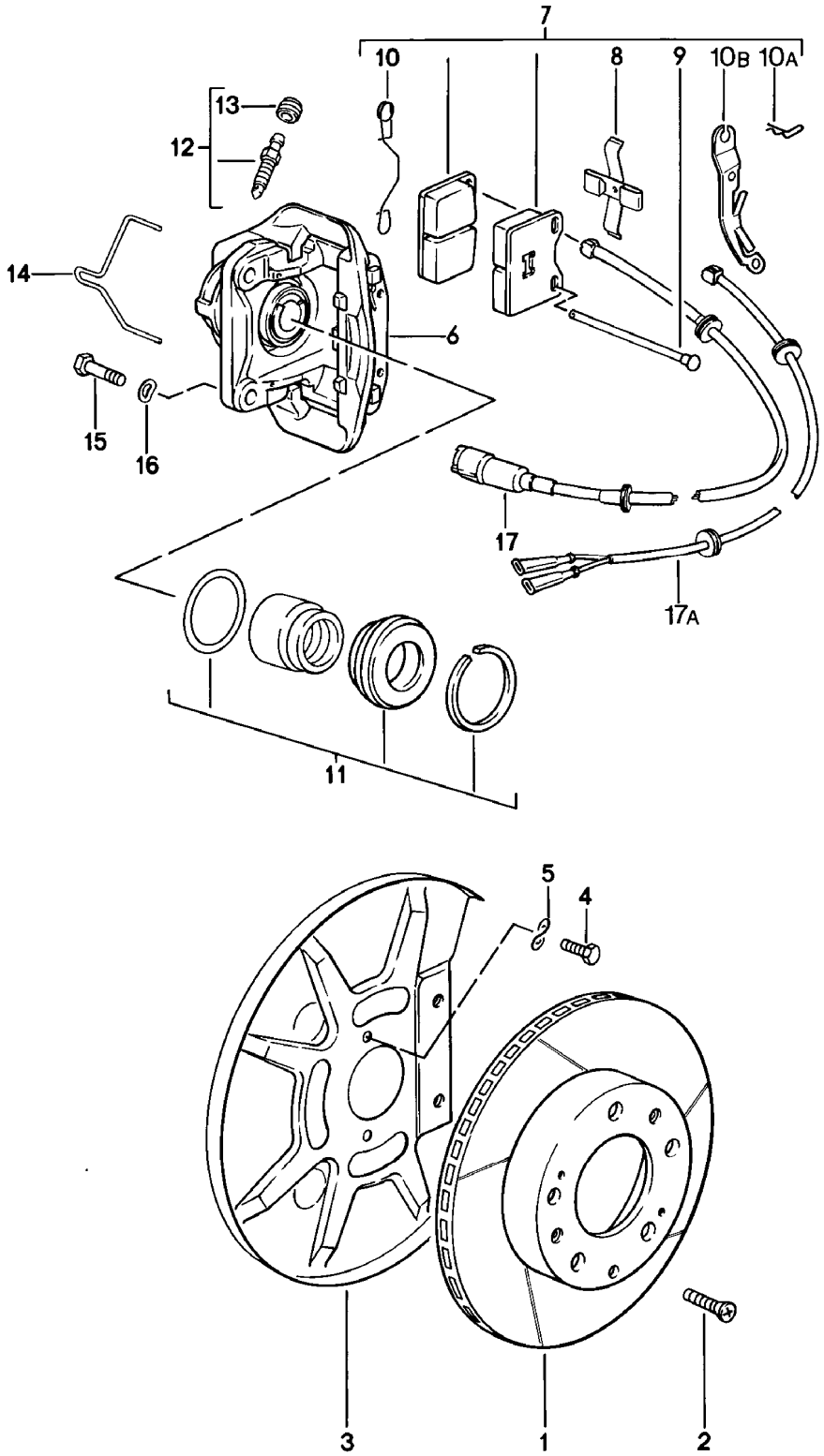

Model	Year	MG	SG	Illustration	Restrictions	UPD	7:14	27.10.2023
928	1978	6	02	602-000		738		

Pos	Part Number	Description	Remark	Qty	Model
		Disc brake Front axle floating caliper F >> 92-A0800 749			928
-		also use: Fasteners for Brake lining			
1	928 351 041 09	Brake disc		2	
		also use:	944 351 951 03	1	
			900 269 047 01	4	
			928 351 958 00	1	
			N 010 142 2	4	
			900 028 014 03	4	
			000 043 305 08	1	
		additionally to be used items:	17/17A	2	
2	N 033 167 1	countersunk bolt Discontinued part		4	
2	900 269 047 01	countersunk bolt		4	
3	928 351 081 00	Protective plate		2	
4	N 010 227 2	Hexagon bolt M 7 X 12		4	
(5)	900 028 019 08	Spring washer		4	
6	928 351 425 01	floating caliper	left	1	
(6)	928 351 426 01	floating caliper	right	1	
7	928 351 951 00	1 set of brake pads for disk brake With fixing parts		1	
(7)	944 351 951 02	1 set of brake pads for disk brake Without fixing parts Discontinued part		1	
(7)	944 351 951 03	1 set of brake pads for disk brake Without fixing parts		1	
(7)	944 351 951 02	1 set of brake pads for disk brake Without fixing parts (asbestos free) Discontinued part		1	
(7)	944 351 951 03	1 set of brake pads for disk brake Without fixing parts (asbestos free)		1	
-	928 351 958 00	1 set attachment parts		1	

Model	Year	MG	SG	Illustration	Restrictions	UPD	7:14	27.10.2023
928	1978	6	02	602-000		738		

Pos	Part Number	Description	Remark	Qty	Model
8	928 351 935 00	Cup expander spring		2	
9	928 351 936 00	Locking pin		4	
10	928 351 937 00	securing spring D >> - MJ 1980		2	
10A	901 351 955 10	securing clip		4	
10B	928 351 823 00	Retaining plate	left	1	
10C	928 351 824 00	Retaining plate	right	1	
11	928 351 941 00	Gasket set		2	
12	928 351 945 00	Breather valve		2	
13	901 351 927 10	dust cap		2	
14	928 351 946 00	guide spring		2	
15	N 010 142 2	Hexagon bolt M 12 X 1,5 X 50		4	
(16)	900 028 014 02	Spring washer Discontinued part		4	
(16)	900 028 014 03	Spring washer		4	
17	928 612 311 00	sender wire (pad wear indicator) F >> 92-88101 800 D >> - MJ 1979		2	
(17)	928 612 311 01	sender wire (pad wear indicator) F 92-88101 801>> Discontinued part		2	
(17)	928 612 311 03	sender wire (pad wear indicator) Together with Retaining plate D >> - MJ 1980		2	
17A	928 612 311 03	sender wire (pad wear indicator) D - MJ 1981>> - MJ 1981		2	
-	000 043 305 08	Assembly paste	100 gram	1	

Model	Year	MG	SG	Illustration	Restrictions	UPD	7:14	27.10.2023
928	1978	6	02	602-005		738		

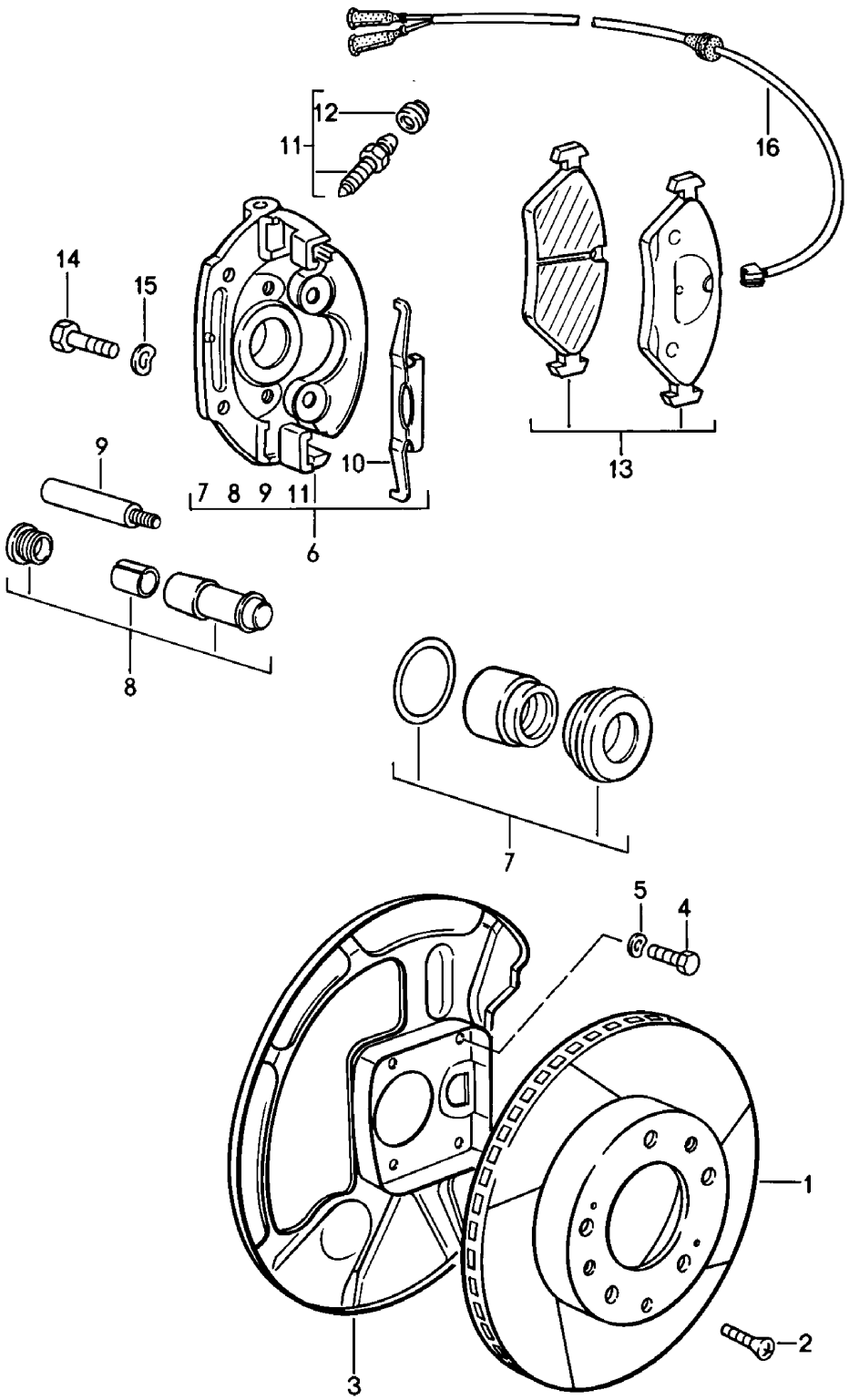

Model	Year	MG	SG	Illustration	Restrictions	UPD	7:14	27.10.2023
928	1978	6	02	602-005		738		

Pos	Part Number	Description	Remark	Qty	Model
		Disc brake Front axle Floating caliper brake F 92-A0800 750>> F 92-A0820 001>>			928 928S
-		also use: Fasteners for Brake lining			
1	928 351 043 01	Brake disc Discontinued part	left	1	
1	928 351 043 06	Brake disc also use:	left 928 351 044 01 928 351 931 01 928 612 315 03 900 269 047 01 928 612 315 03 000 043 305 08 N 010 142 2 900 028 014 03	1 1 1 2 4 2 1 4 4	
(1)	928 351 044 01	Brake disc	right	1	
2	N 033 167 1	countersunk bolt M 6 X 12 Discontinued part		4	
2	900 269 047 01	countersunk bolt M 6 X 12		4	
2	N 033 167 1	countersunk bolt Discontinued part		4	
2	900 269 047 01	countersunk bolt		4	
3	928 351 083 00	Protective plate	left	1	
(3)	928 351 084 00	Protective plate	right	1	
4	N 010 227 2	Hexagon bolt M 7 X 12		8	
5	900 028 019 08	Spring washer		8	
6	928 351 427 00	Floating call. w/o br. linings	left	1	
(6)	928 351 428 00	Floating call. w/o br. linings	right	1	
7	928 351 943 00	Gasket set		2	
8	928 351 949 00	Damping sleeve Discontinued part Glide piece		2	
9	928 351 947 00	guide pin		4	
10	928 351 953 00	retaining spring		2	

Model	Year	MG	SG	Illustration	Restrictions	UPD	7:14	27.10.2023
928	1978	6	02	602-005		738		

Pos	Part Number	Description	Remark	Qty	Model
11	928 351 945 01	Breather valve		2	
12	901 351 927 10	dust cap		2	
13	928 351 931 01	1 set of brake pads for disk brake		1	
(13)	928 351 931 01	1 set of brake pads for disk brake (asbestos free)		1	
14	N 010 142 2	Hexagon bolt M 12 X 1,5 X 50		4	
15	900 028 014 02	Spring washer Discontinued part		4	
15	900 028 014 03	Spring washer		4	
16	928 612 315 01	sender wire (pad wear indicator) Discontinued part		2	
16	928 612 315 03	sender wire (pad wear indicator)		2	
-	999 651 165 02	Cable fastener		2	
-	999 651 162 40	Cable holder		2	
-	999 651 154 40	Line holder		2	
-	999 651 161 40	Line holder		4	
-	000 043 305 08	Assembly paste	100 gram	1	

Model	Year	MG	SG	Illustration	Restrictions	UPD	7:15	27.10.2023
928	1978	6	03	603-000		738		

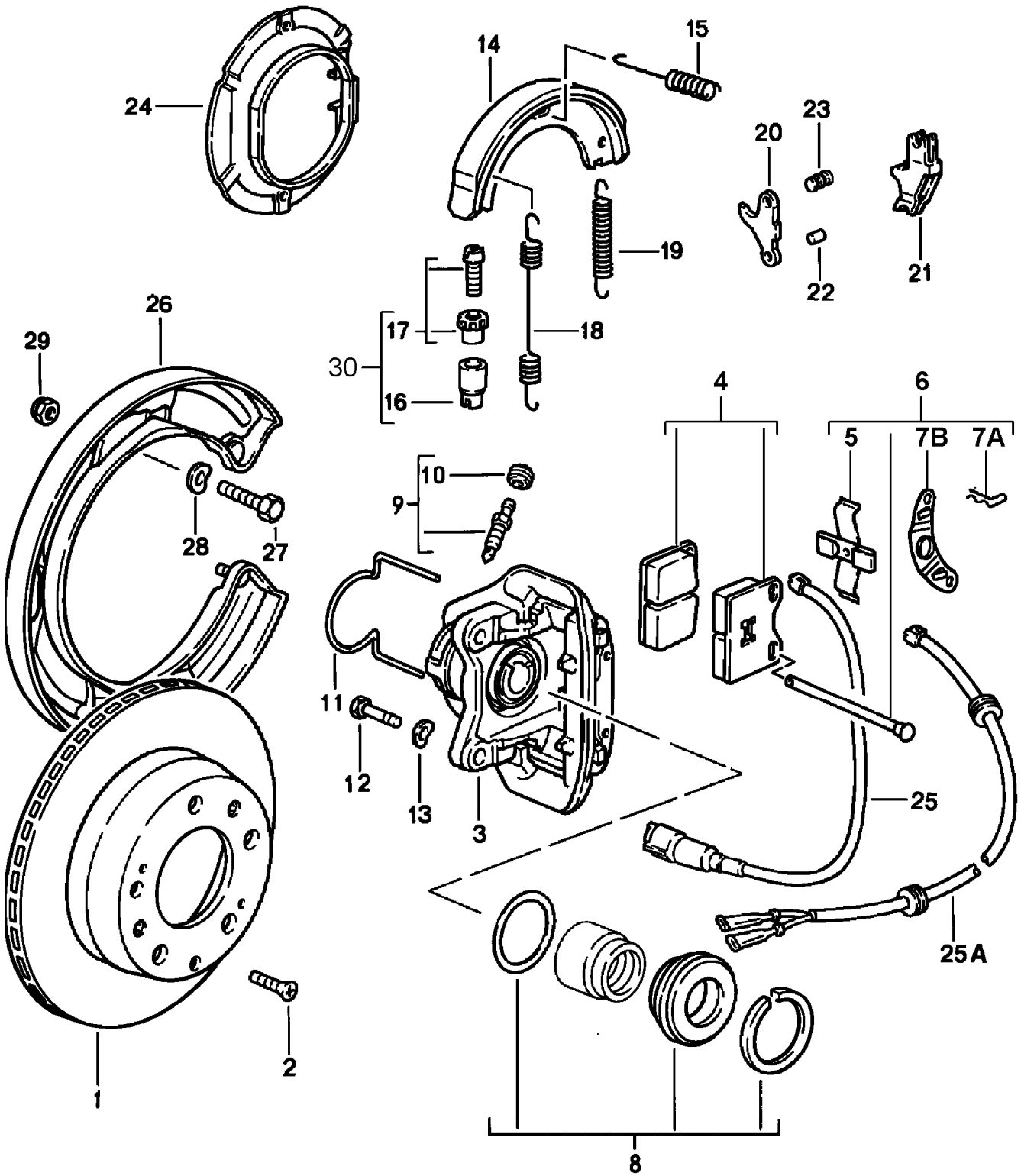

Model	Year	MG	SG	Illustration	Restrictions	UPD	7:15	27.10.2023
928	1978	6	03	603-000		738		

Pos	Part Number	Description	Remark	Qty	Model
		Disc brake Rear axle			
-		also use: Fasteners for Brake lining			
1	944 352 041 02	Brake disc		2	
1	944 352 041 05	Brake disc		2	
		also use:	928 352 951 02	1	
			900 269 047 01	4	
			928 352 953 01	1	
			000 043 305 08	1	
			900 082 145 01	4	
			900 028 014 03	4	
		additionally to be used items:	25/25A		
2	N 033 167 1	countersunk bolt Discontinued part		4	
2	900 269 047 01	countersunk bolt		4	
3	928 352 425 01	floating caliper	left	1	
(3)	928 352 426 01	floating caliper	right	1	
4	928 352 951 02	1 set of brake pads for disk brake -TEXTAR T 400- without: Fasteners (asbestos free)		1	
-	928 352 953 00	1 set attachment parts		1	
5	928 352 935 00	Cup expander spring		2	
6	928 352 953 00	1 set attachment parts		4	
7	928 352 937 00	securing spring D >> - MJ 1979		2	
7A	901 351 955 10	securing clip D - MJ 1980>>		4	
7B	928 352 823 00	Retaining plate D - MJ 1980>>		2	
8	928 352 941 00	Gasket set		2	
9	901 352 977 10	Bleed valve		2	
10	901 351 927 10	dust cap		2	
11	928 352 939 00	guide spring D >> - MJ 1979	left	1	
(11)	928 352 940 00	guide spring D >> - MJ 1979	right	1	

Model	Year	MG	SG	Illustration	Restrictions	UPD	7:15	27.10.2023
928	1978	6	03	603-000		738		

Pos	Part Number	Description	Remark	Qty	Model
(11)	928 352 939 00	guide spring D - MJ 1980>>	left	1	
(11)	928 352 940 00	guide spring D - MJ 1980>>	right	1	
12	900 082 077 02	Hexagon bolt M 12 X 1,5 X 37		4	
12	900 082 145 01	Hexagon bolt M 12 X 1,5 X 37		4	
13	N 012 232 1	Spring washer		4	
14	928 352 097 00	Brake lining Discontinued part		4	
(14)	996 352 993 00	repair set (asbestos free) Discontinued part		4	
(14)	997 352 993 02	1 set: brake linings for drum brakes only in conj. with: Pressure spring 996.352.741.00 adjustment screw 993.352.071.00		1	
		also use:	000 043 305 08	1	
15	928 352 957 02	Pressure spring		4	
(15)	996 352 741 00	Pressure spring only in conj. with: repair set 997.352.993.02		4	
16	911 352 944 00	bush		2	
17	911 352 098 00	adjustment screw Discontinued part		2	
17	911 352 098 01	adjustment screw		2	
18	901 352 954 10	Return spring		2	
19	901 352 932 10	Return spring		2	
20	993 352 073 00	Spreader		2	
21	993 352 073 00	Spreader		2	
22	993 352 737 00	Pin		2	
23	928 352 447 00	Pin		2	
24	928 352 081 01	back plate		2	

Model	Year	MG	SG	Illustration	Restrictions	UPD	7:15	27.10.2023
928	1978	6	03	603-000		738		

Pos	Part Number	Description	Remark	Qty	Model
25	928 612 313 00	sender wire (pad wear indicator) F >> 92-88101 800 Discontinued part		2	
25	928 612 313 03	sender wire (pad wear indicator) F >> 92-88101 800		2	
25A	928 612 313 01	sender wire (pad wear indicator) F 92-88101 801>> Discontinued part		2	
25A	928 612 313 05	sender wire (pad wear indicator) F 92-88101 801>>		2	
-	999 651 165 02	Cable fastener		2	
-	999 651 163 40	Push-on sleeve		2	
-	999 651 161 40	Line holder		7	
26	928 352 813 02	Protective plate	left	1	
(26)	928 352 814 02	Protective plate	right	1	
27	900 119 030 02	Socket head bolt M 8 X 20		6	
(27)	N 010 215 13	Hexagon bolt M 6 X 15		2	
28	N 012 241 8	Spring washer		6	
(28)	N 012 226 5	Spring washer		2	
29	900 910 022 02	Locknut		6	
30	993 352 071 00	adjustment screw only in conj. with: repair set 997.352.993.02 Discontinued part		2	
30	298 609 723	adjustment screw only in conj. with: repair set 997.352.993.02		2	
-	000 043 305 08	Assembly paste	100 gram	1	

Model	Year	MG	SG	Illustration	Restrictions	UPD	7:15	27.10.2023
928	1978	6	04	604-000		738		

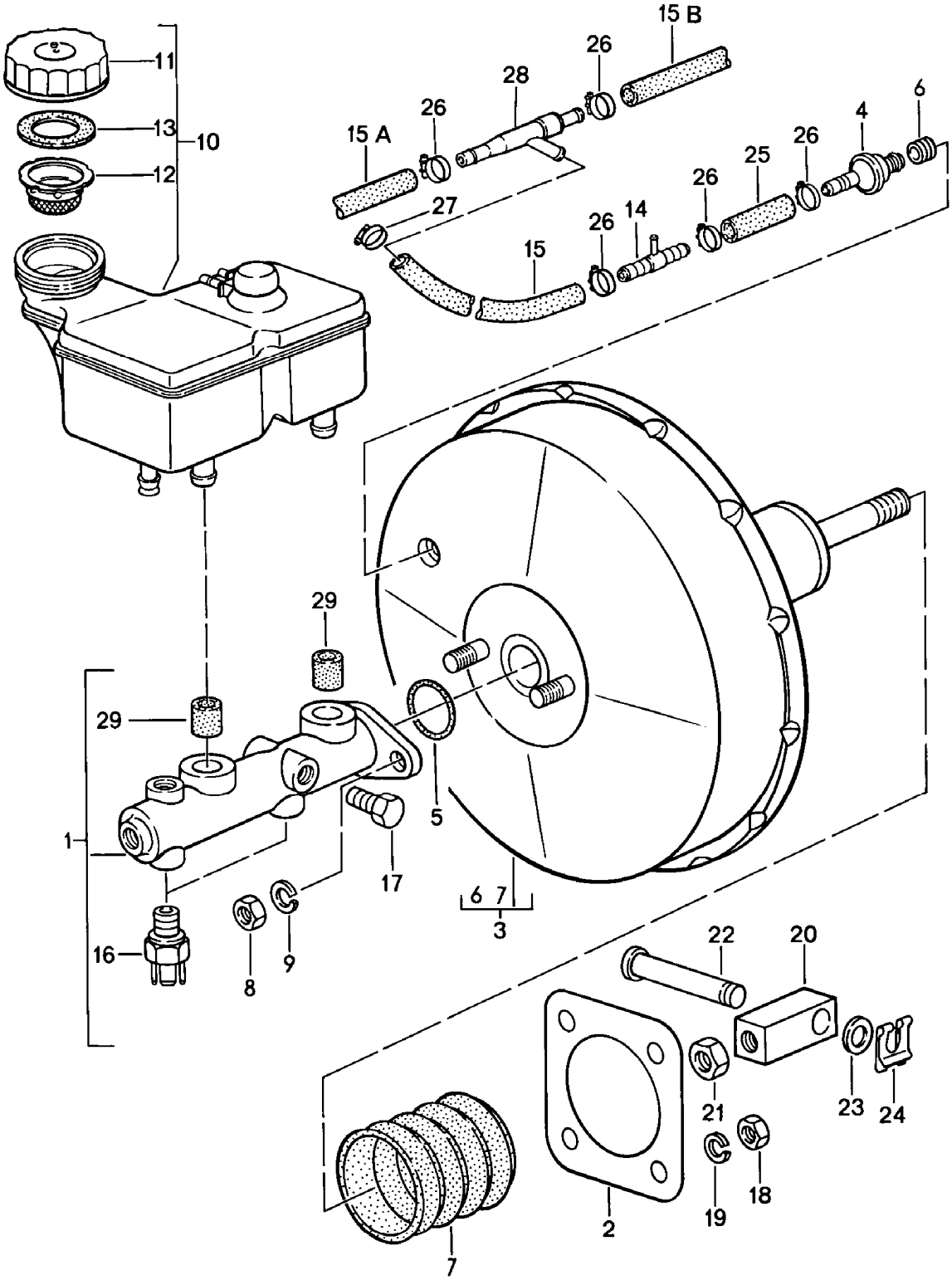

Model	Year	MG	SG	Illustration	Restrictions	UPD	7:15	27.10.2023
928	1978	6	04	604-000		738		

Pos	Part Number	Description	Remark	Qty	Model
		Brake master cylinder Brake servo			
-	000 044 305 01	brake fluid DOT 4 1 LTR.		1	
-	000 044 305 30	brake fluid DOT 4 30 LTR.		1	
1	928 355 011 04	Brake master cylinder Discontinued part		1	
1	928 355 011 04	Brake master cylinder		1	
2	477 611 951	Seal 4 MM Brake servo $ 9"		1	
2	477 611 951	Seal 2 MM Brake servo $ 10"		1	
3	928 355 023 04	Brake servo F >> 92-89101 485 D >> - MJ 1979		1	
(3)	928 355 023 09	Brake servo $ 10" only in conj. with: floating caliper F 92-89101 486>> F >> 92-A0800 749	front	1	
(3)	928 355 023 09	Brake servo only in conj. with: Floating caliper brake D - MJ 1980>>	front	1	
4	431 611 933	Non-return valve	lhd	1	
4	191 611 933 F	Non-return valve	rhd	1	
5	251 611 243	gasket between brake servo andbrake tandem master cylinder		1	
6	911 355 921 00	Rubber seal Discontinued part		1	
6	955 355 921 00	Rubber seal		1	
7	477 611 115	Bellows		1	
8	900 076 025 02	Hexagon nut Discontinued part		2	

Model	Year	MG	SG	Illustration	Restrictions	UPD	7:15	27.10.2023
928	1978	6	04	604-000		738		

Pos	Part Number	Description	Remark	Qty	Model
8	900 076 064 02	Hexagon nut		2	
9	N 012 241 8	Spring washer		2	
10	928 355 013 13	Reservoir for brake fluid (complete) Discontinued part		1	
(10)	928 355 650 06	container (complete) Discontinued part		1	
(10)	928 355 650 06	container		1	
-	928 355 654 03	Bracket for container		1	
11	477 611 361	End cap		1	
12	211 611 381 B	strainer		1	
13	901 355 908 00	Seal		1	
14	321 611 813	t-piece		1	
15	928 355 663 00	Molded hose	lhd	1	
(15)	927 355 609 02	angled hose	rhd	1	
-	999 181 022 51	Hose Length (cm):	12 X 3,7 100	*	
15A		shorten to:	50 MM	2	
15B		shorten to:	640 MM	1	
16	113 945 515 G	brake light switch with warning contact		2	
17	999 064 018 02	sealing plug for Brake master cylinder	rhd	1	
18	900 076 025 02	Hexagon nut Discontinued part		4	
18	900 076 064 02	Hexagon nut		4	
19	900 027 015 02	spring ring B 8		4	
19	900 027 015 03	spring ring B 8		4	
20	928 355 509 00	Intermediate piece for Brake servo $ 9" D >> - MJ 1979		1	

Model	Year	MG	SG	Illustration	Restrictions	UPD	7:15	27.10.2023
928	1978	6	04	604-000		738		

Pos	Part Number	Description	Remark	Qty	Model
(20)	928 355 509 01	Intermediate piece for Brake servo $ 10"		1	
21	900 034 003 02	Hexagon nut		1	
22	928 355 511 00	Pin		1	
23	900 025 009 02	Washer		1	
24	N 012 653 1	Retaining washer		1	
-	999 181 022 51	Hose Length (cm):	12 X 3,7 100	*	
25		shorten to:	50 MM	1	
(25)		shorten to:	280 MM	1	
26	999 512 063 02	Clamp Discontinued part		7	
26	999 512 063 01	Clamp		7	
27	999 512 045 02	Hose clamp		1	
28	035 133 753 A	suction jet pump Discontinued part		1	
28	035 133 753 B	suction jet pump		1	
-	928 355 515 00	jet D - MJ 1980>>		1	
29	911 355 922 00	Sealing plug		2	

Model	Year	MG	SG	Illustration	Restrictions	UPD	7:15	27.10.2023
928	1978	6	04	604-005		738		

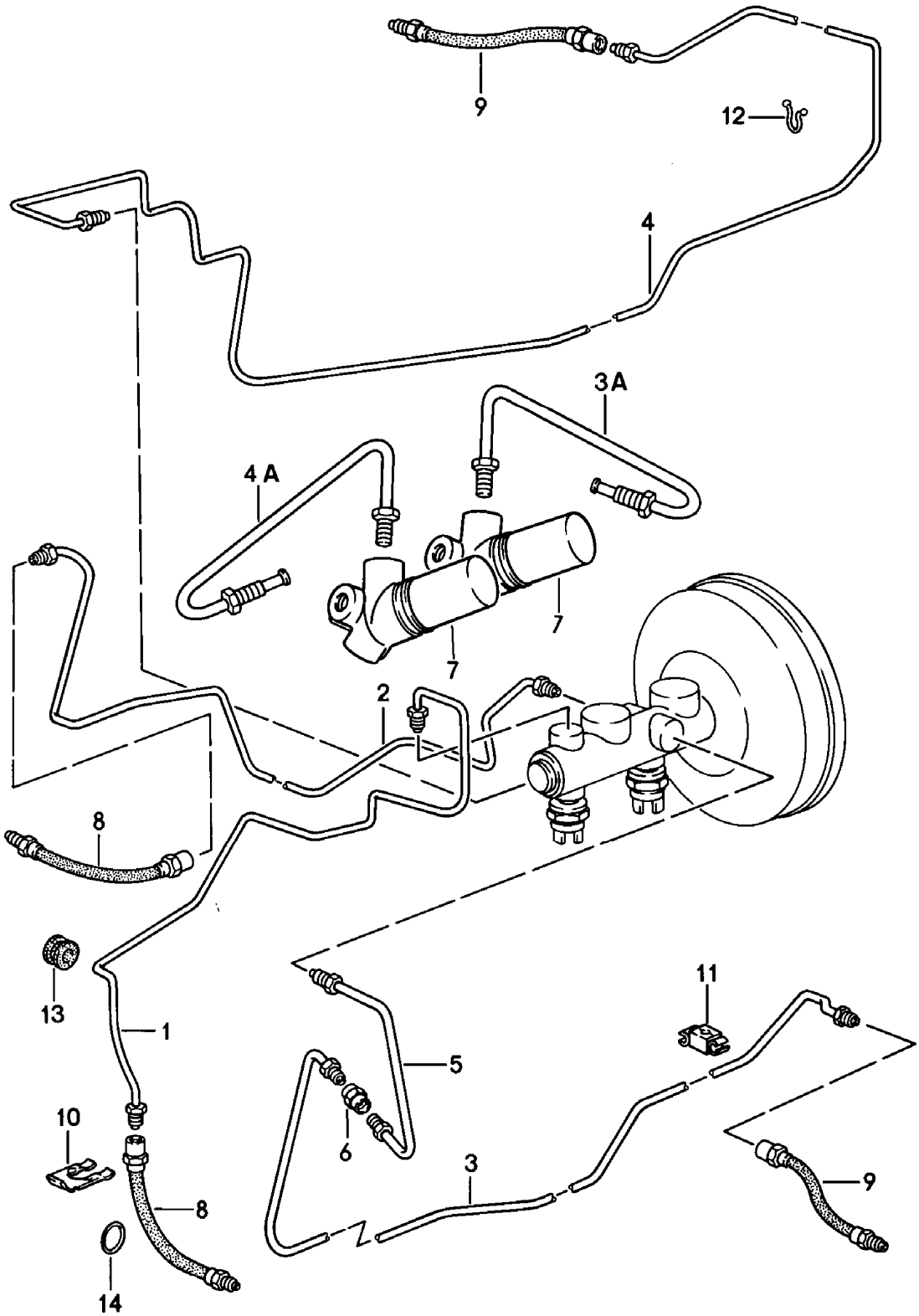

Model	Year	MG	SG	Illustration	Restrictions	UPD	7:15	27.10.2023
928	1978	6	04	604-005		738		

Pos	Part Number	Description	Remark	Qty	Model
		Brake line only in conj. with: Brake servo 928.355.023.03 /04 without: brake force regulator F >> 92-88101 129			
1	928 355 061 01	Brake line	lhd left	1	
2	928 355 062 01	Brake line	lhd right	1	
3	928 355 063 01	Brake line	lhd left	1	
4	928 355 064 01	Brake line	lhd right	1	
5	928 355 075 00	Brake line with: brake force regulator F >> 92-89101 485	left	1	
1	928 355 061 03	Brake line	lhd left	1	
(1)	927 355 061 00	Brake line	rhd left	1	
2	928 355 062 01	Brake line	lhd right	1	
(2)	927 355 062 00	Brake line	rhd right	1	
3	927 355 073 01	Brake line	lhd left	1	
3A	928 355 093 01	Brake line	lhd left short	1	
(3A)	927 355 063 01	Brake line	rhd left	1	
4	927 355 071 00	Brake line	rhd right	1	
(4)	927 355 067 00	Brake line	rhd right	1	
4A	928 355 092 01	Brake line	lhd right short	1	
(4A)	927 355 069 01	Brake line	rhd left	1	

Model	Year	MG	SG	Illustration	Restrictions	UPD	7:15	27.10.2023
928	1978	6	04	604-005		738		

Pos	Part Number	Description	Remark	Qty	Model
6	914 355 661 00	Intermediate piece M 10 X 1		1	
7	928 355 083 02	brake force regulator		2	
-	900 025 007 02	Washer Discontinued part		2	
-	900 025 007 03	Washer		2	
-	N 010 237 6	Hexagon bolt M 8 X 12 Discontinued part		2	
-	N 010 237 14	Hexagon bolt M 8 X 12		2	
-	914 355 667 00	Junction	rhd	1	
-	900 075 017 02	Hexagon bolt M 6 X 25	rhd	1	
-	900 075 017 03	Hexagon bolt M 6 X 25	rhd	1	
-	900 028 008 01	spring ring	rhd	1	
-	900 076 010 02	Nut Discontinued part	rhd	1	
-	900 076 010 0B	Nut	rhd	1	
-	900 076 010 03	Nut	rhd	1	
8	928 355 079 00	Brake hose D >> - MJ 1979 Discontinued part	front	2	
8	928 355 079 03	Brake hose	front	2	
9	928 355 626 00	Brake hose D >> - MJ 1979 Discontinued part	rear	2	
9	928 355 080 01	Brake hose Discontinued part	rear	2	
9	928 355 080 02	Brake hose	rear	2	
10	113 611 715 A	Brake hose bracket D >> - MJ 1979		4	
11	477 611 767 B	clamp D >> - MJ 1979		14	
12	999 651 161 40	Line holder D >> - MJ 1979		11	
13	999 702 031 50	Rubber grommet D >> - MJ 1979 Discontinued part		2	

Model	Year	MG	SG	Illustration	Restrictions	UPD	7:15	27.10.2023
928	1978	6	04	604-005		738		

Pos	Part Number	Description	Remark	Qty	Model
13	999 702 031 5A	Rubber grommet		2	
14	999 701 481 40	O-ring D >> - MJ 1979 Discontinued part		12	
14	999 701 442 40	O-ring		12	
-		only in conj. with: Brake servo 928.355.023.05/06 F 92-89101 486>>			
1	928 355 061 03	Brake line D >> - MJ 1979	lhd left	1	
(1)	928 355 061 04	Brake line D - MJ 1980>>	lhd left	1	
(1)	927 355 061 00	Brake line D >> - MJ 1979	rhd left	1	
(1)	927 355 061 01	Brake line D - MJ 1980>>	rhd left	1	
2	928 355 062 02	Brake line D >> - MJ 1979	lhd right	1	
(2)	928 355 062 03	Brake line D - MJ 1980>>	lhd right	1	
(2)	927 355 062 01	Brake line D >> - MJ 1979	rhd right	1	
(2)	927 355 062 02	Brake line D - MJ 1980>>	rhd right	1	
3	927 355 073 01	Brake line	left	1	
3A	928 355 093 01	Brake line	lhd left	1	
(3A)	927 355 063 01	Brake line	rhd left	1	
4	927 355 071 01	Brake line	right	1	
(4)	927 355 067 00	Brake line	rhd right	1	
4A	928 355 092 01	Brake line	lhd right	1	

Model	Year	MG	SG	Illustration	Restrictions	UPD	7:15	27.10.2023
928	1978	6	04	604-005		738		

Pos	Part Number	Description	Remark	Qty	Model
(4A)	927 355 069 01	Brake line	rhd	1	
7	928 355 083 02	brake force regulator		2	
-	900 025 007 02	Washer Discontinued part		2	
-	900 025 007 03	Washer		2	
-	N 010 237 6	Hexagon bolt M 8 X 12 Discontinued part		2	
-	N 010 237 14	Hexagon bolt M 8 X 12		2	
-	914 355 667 00	Junction	rhd	1	
-	900 075 017 02	Hexagon bolt M 6 X 25	rhd	1	
-	900 075 017 03	Hexagon bolt M 6 X 25	rhd	1	
-	900 028 008 01	spring ring	rhd	1	
-	900 076 010 02	Nut Discontinued part	rhd	1	
-	900 076 010 0B	Nut	rhd	1	
-	900 076 010 03	Nut	rhd	1	
8	928 355 079 00	Brake hose floating caliper Discontinued part	front	2	
8	928 355 079 03	Brake hose floating caliper	front	2	
(8)	928 355 079 02	Brake hose Floating caliper brake Discontinued part	front	2	
(8)	928 355 079 04	Brake hose Floating caliper brake	front	2	
9	928 355 080 02	Brake hose	rear	2	
10	113 611 715 A	Brake hose bracket		4	
11	477 611 767 B	clamp		14	
12	999 651 161 40	Line holder		11	
13	999 702 031 50	Rubber grommet Discontinued part		2	
13	999 702 031 5A	Rubber grommet		2	

Model	Year	MG	SG	Illustration	Restrictions	UPD	7:15	27.10.2023
928	1978	6	04	604-005		738		

Pos	Part Number	Description	Remark	Qty	Model
14	**999 701 481 40**	**O-ring** **Discontinued part**		**12**	
14	**999 701 442 40**	**O-ring**		**12**	

Model	Year	MG	SG	Illustration	Restrictions	UPD	7:15	27.10.2023
928	1978	6	98	698-000		738		

Pos	Part Number	Description	Remark	Qty	Model
		repair kits			
-		**also use:** **Fasteners** **for** **Brake lining**			
-	**928 351 951 00**	**1 set of brake pads for** **disk brake** **(ENERGIT 394 - 380)** **for** **floating caliper** **comprising:** **Brake lining**	**front**	**1** **4**	**928**
-	**928 351 935 00**	**Cup expander spring**		**2**	
-	**928 351 936 00**	**Locking pin**		**4**	
-	**901 351 955 10**	**securing clip**		**4**	
-	**928 351 823 00**	**Retaining plate**	**left**	**1**	
-	**928 351 824 00**	**Retaining plate**	**right**	**1**	
-	**944 351 951 02**	**1 set of brake pads for** **disk brake** **ENERGIT 394 - 380** **for** **floating caliper** **comprising:** **Brake lining** **Discontinued part**	**front**	**1** **4**	**928**

Model	Year	MG	SG	Illustration	Restrictions	UPD	7:16	27.10.2023
928	1978	6	98	698-005		738		

Model	Year	MG	SG	Illustration	Restrictions	UPD	7:16	27.10.2023
928	1978	6	98	698-005		738		

Pos	Part Number	Description	Remark	Qty	Model
		brake fluid Porsche Classic			
1	**000 044 305 01**	**brake fluid Porsche Classic 1 L**		**1**	
2	**000 044 305 30**	**brake fluid Porsche Classic 30 L**		**1**	

Model	Year	MG	SG	Illustration	Restrictions	UPD	7:16	27.10.2023
928	1978	7	01	701-000		738		

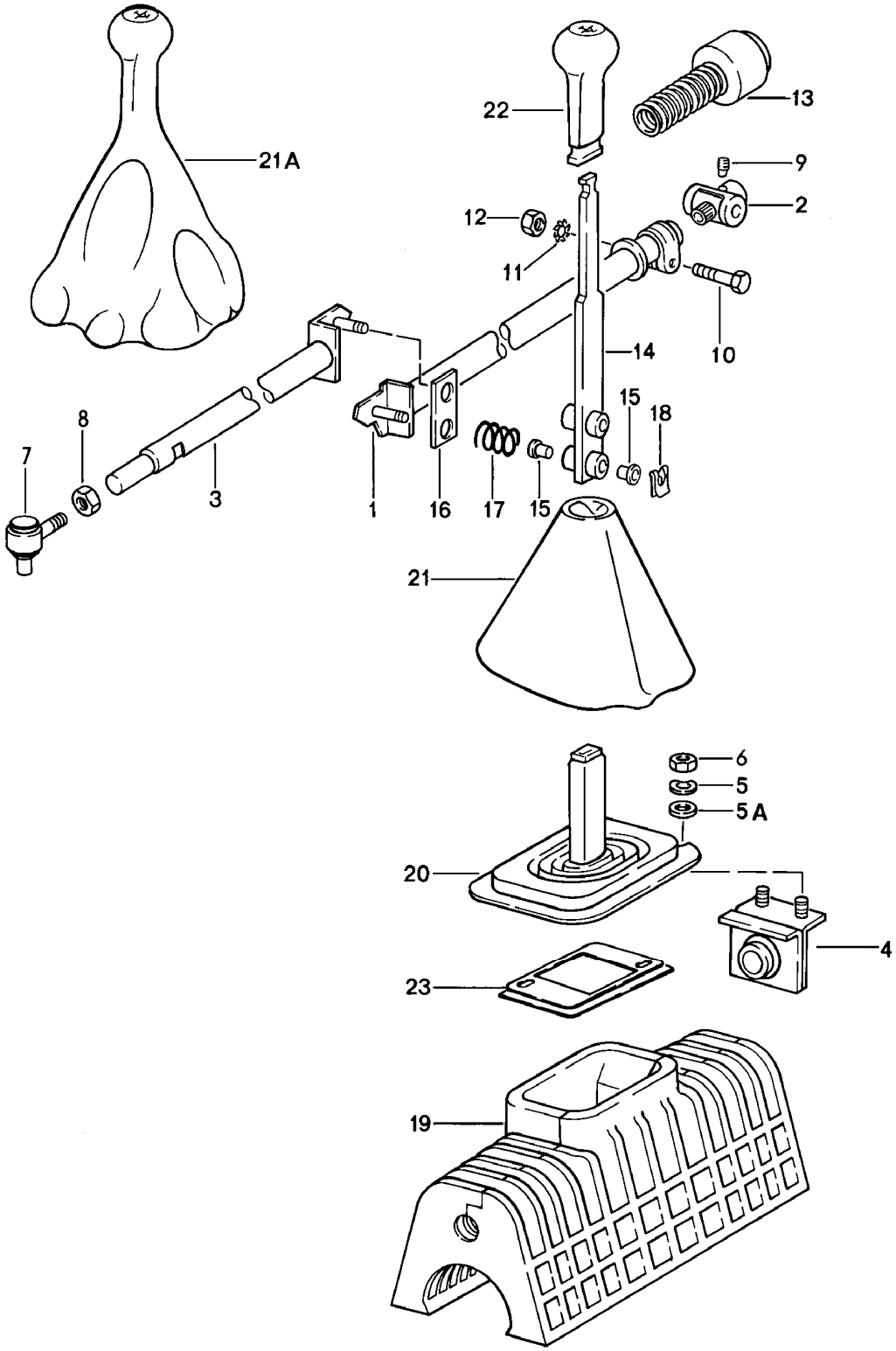

Model	Year	MG	SG	Illustration	Restrictions	UPD	7:16	27.10.2023
928	1978	7	01	701-000		738		

Pos	Part Number	Description	Remark	Qty	Model
		Selector mechanism Manual gearbox			
1	928 424 028 01	selector shaft D >> - MJ 1980		1	928 G2803
(1)	928 424 028 18	selector shaft F 92-AO820 001>>		1	928S
(1)	928 424 028 18	selector shaft D - MJ 1981>>		1	928 G2805
2	928 424 029 00	bracket for gearshift rod		1	
3	928 424 009 01	guide tube F >> 92-89100 170 D - MJ 1979>> - MJ 1979		1	
(3)	928 424 009 08	guide tube F 92-89100 171>>		1	
4	928 424 017 06	Bracket D - MJ 1978>> - MJ 1978		1	
(4)	928 424 017 06	Bracket F >> 92-89100 170 D >> - MJ 1979		1	
(4)	928 424 017 05	Bracket F 92-89100 171>>		1	
5	N 012 006 4	spring ring		2	
5A	N 011 524 7	Washer Discontinued part		2	
5A	N 011 524 27	Washer		2	
6	900 076 010 02	Nut Discontinued part		2	
6	900 076 010 0B	Nut		2	
6	900 076 010 03	Nut		2	
7	928 424 005 01	Joint		1	
8	900 034 003 02	Hexagon nut		1	
9	928 424 229 00	clamp with thread		1	
10	N 040 222 2	Hexagon bolt M 8 X 32		1	
11	999 523 102 02	Toothed washer Discontinued part		1	
11	999 523 102 0B	Toothed washer		1	

Model	Year	MG	SG	Illustration	Restrictions	UPD	7:16	27.10.2023
928	1978	7	01	701-000		738		

Pos	Part Number	Description	Remark	Qty	Model
12	900 076 025 02	Hexagon nut Discontinued part		1	
12	900 076 064 02	Hexagon nut		1	
13	928 424 209 00	Bellows		1	
14	928 424 067 08	gearshift lever	lhd	1	
(14)	927 424 067 00	gearshift lever	rhd	1	
15	999 924 002 40	bush		4	
16	928 424 149 01	Friction washer		1	
17	928 424 147 03	Pressure spring		2	
18	999 166 034 02	Retaining plate D >> - MJ 1981		2	
(18)	999 166 034 02	Retaining plate D - MJ 1982>> - MJ 1982		2	
19	928 424 182 01	Sound absorber F >> 92-89100 170 D >> - MJ 1979		1	
(19)	928 424 182 03	Sound absorber F 92-89100 171>>		1	
20	928 424 181 03	Protective sleeve		1	928
21	928 424 139 02	Bellows F >> 92-89100 016 D >> - MJ 1979		1	928
(21)	928 424 023 01	Bellows	Leather	1	928
	08/77-07/821AJ	Black F 92-89100 017>>			
-	477 711 257	rubber ring		1	928
21A	928 424 073 01	gearstick knob D - MJ 1980>>		1	928S
	08/79-07/821AJ	Black			
21A	928 424 073 01	gearstick knob		1	
	08/77-07/822LB	wine red			
	08/77-07/821RN	Medium brown			
22	928 424 105 06	gearstick knob		1	928
23	928 552 283 02	Frame F >> 92-89100 016 D >> - MJ 1979		1	

Model	Year	MG	SG	Illustration	Restrictions	UPD	7:16	27.10.2023
928	1978	7	01	701-000		738		

Pos	Part Number	Description	Remark	Qty	Model
-	928 552 441 02	panel nut D >> - MJ 1979		2	
-	900 151 019 02	Washer D >> - MJ 1979		2	
-	N 013 957 5	oval head panel screw B 3,5 X 9,5 D >> - MJ 1979		2	
(23)	928 552 017 00	Frame F 92-89100 017>>		1	

Model	Year	MG	SG	Illustration	Restrictions	UPD	7:16	27.10.2023
928	1978	7	01	701-005		738		

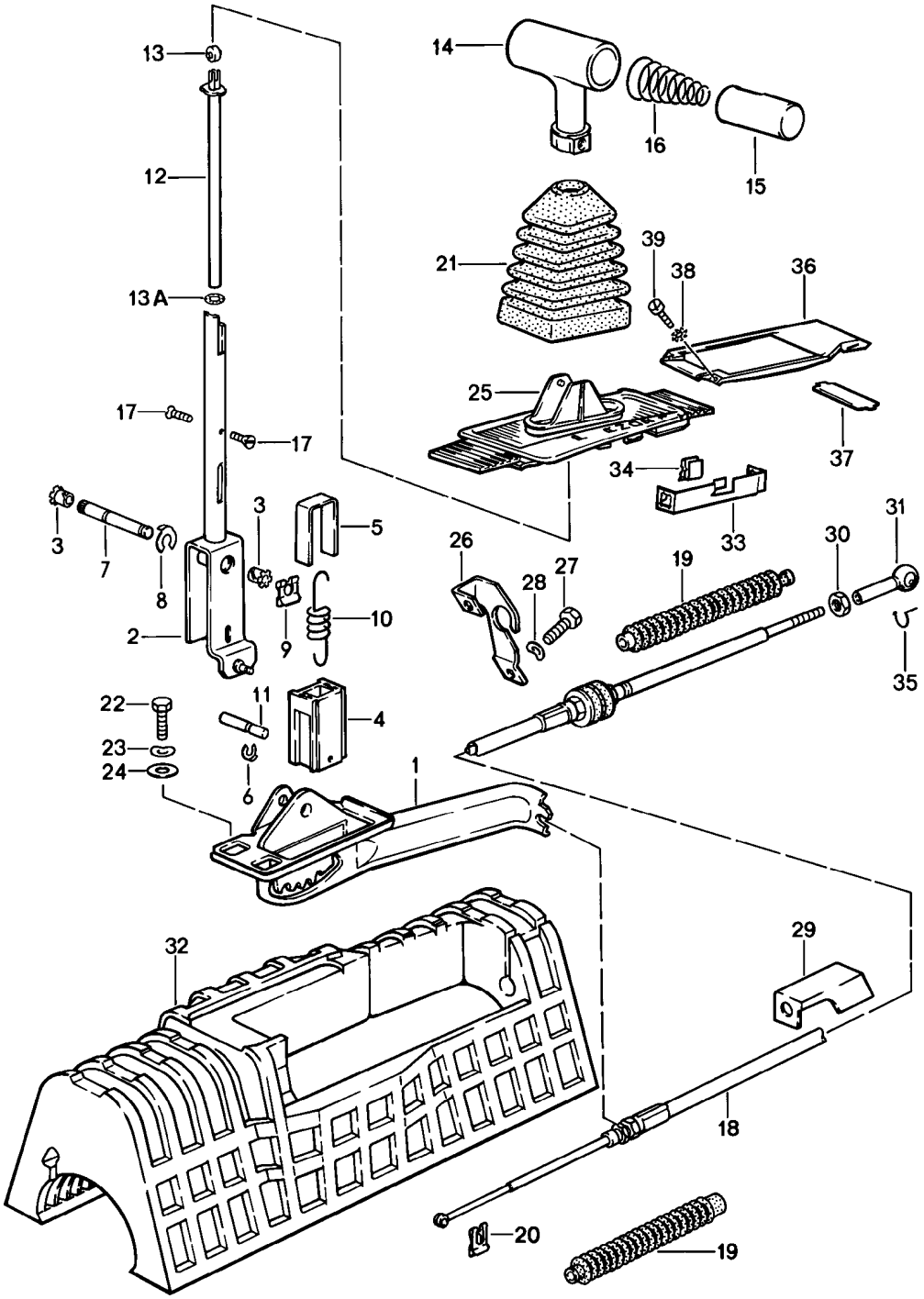

Model	Year	MG	SG	Illustration	Restrictions	UPD	7:16	27.10.2023
928	1978	7	01	701-005		738		

Pos	Part Number	Description	Remark	Qty	Model
		Selector mechanism Automatic gearbox			
1	922 424 031 02	Selector mechanism		1	
2	922 424 061 01	selector lever	lhd	1	
(2)	922 424 061 01	selector lever	rhd	1	
3	999 924 001 40	Bearing bush		2	
4	922 424 172 00	Locking unit		1	
5	922 424 171 00	arm		1	
6	999 166 040 02	Retaining washer		1	
7	922 424 166 02	bearing pin F >> 92-89102 573		1	
(7)	922 424 166 03	bearing pin F 92-89102 574>>		1	
8	999 166 022 02	Retaining washer		1	
9	999 166 005 02	Retaining plate		1	
10	922 424 168 01	tension spring		1	
11	922 424 167 01	Cylinder pin		1	
12	922 424 170 03	push rod		1	
13	321 713 137	caster wheel		1	
13A	999 701 608 40	O-ring 5 X 2 B		2	
14	922 424 173 01	selector lever		1	
15	922 424 174 00	Pushbutton		1	
16	922 424 176 01	Pressure spring		1	
-	922 424 201 00	spring disc		1	
-	922 424 203 00	spring disc		1	
17	N 033 165 1	countersunk bolt M 4 X 8 Discontinued part		2	
(17)	N 033 165 1	countersunk bolt M 4 X 8		2	
18	922 424 033 01	Cable for selector lever Discontinued part		1	
19	922 424 103 00	Bellows		2	

Model	Year	MG	SG	Illustration	Restrictions	UPD	7:16	27.10.2023
928	1978	7	01	701-005		738		

Pos	Part Number	Description	Remark	Qty	Model
20	N 012 644 1	fuse		1	
21	928 426 139 00	Bellows D >> - MJ 1979 Discontinued part		1	
(21)	928 426 139 00	Bellows		1	
22	900 075 057 02	Hexagon bolt M 6 X 16		3	
22	900 075 057 03	Hexagon bolt M 6 X 16 No longer use the part here		3	
23	N 012 226 5	Spring washer B 6		3	
24	N 011 550 1	Washer		3	
25	928 552 091 02	Frame D >> - MJ 1978	lhd	1	
(25)	927 552 091 03	Frame Discontinued part	rhd	1	
(25)	927 552 091 03	Frame	rhd	1	
(25)	928 552 091 04	Frame D - MJ 1979>>	lhd	1	
26	922 424 101 01	Retaining bracket		1	
27	N 010 237 6	Hexagon bolt M 8 X 12 Discontinued part		2	
27	N 010 237 14	Hexagon bolt M 8 X 12		2	
28	N 012 241 8	Spring washer		2	
29	922 424 193 00	Support plate		1	
30	900 076 027 02	Nut		1	
31	911 423 147 00	ball socket		1	
32	922 424 182 00	Sound absorber		1	
33	922 424 191 00	Carrier		1	
34	999 591 462 02	Double U-clip		2	
35	900 169 014 02	Securing bars Discontinued part		1	
35	900 169 014 01	Securing bars		1	
36	928 552 181 02	Support Switch unit		1	

Model	Year	MG	SG	Illustration	Restrictions	UPD	7:16	27.10.2023
928	1978	7	01	701-005		738		

Pos	Part Number	Description	Remark	Qty	Model
37	928 552 317 02	Divider		1	
38	900 114 015 01	Toothed washer		2	
39	900 146 032 02	fillister hd. bolt AM 3,5 X 10		2	

Model	Year	MG	SG	Illustration	Restrictions	UPD	7:17	27.10.2023
928	1978	7	01	701-010		738		

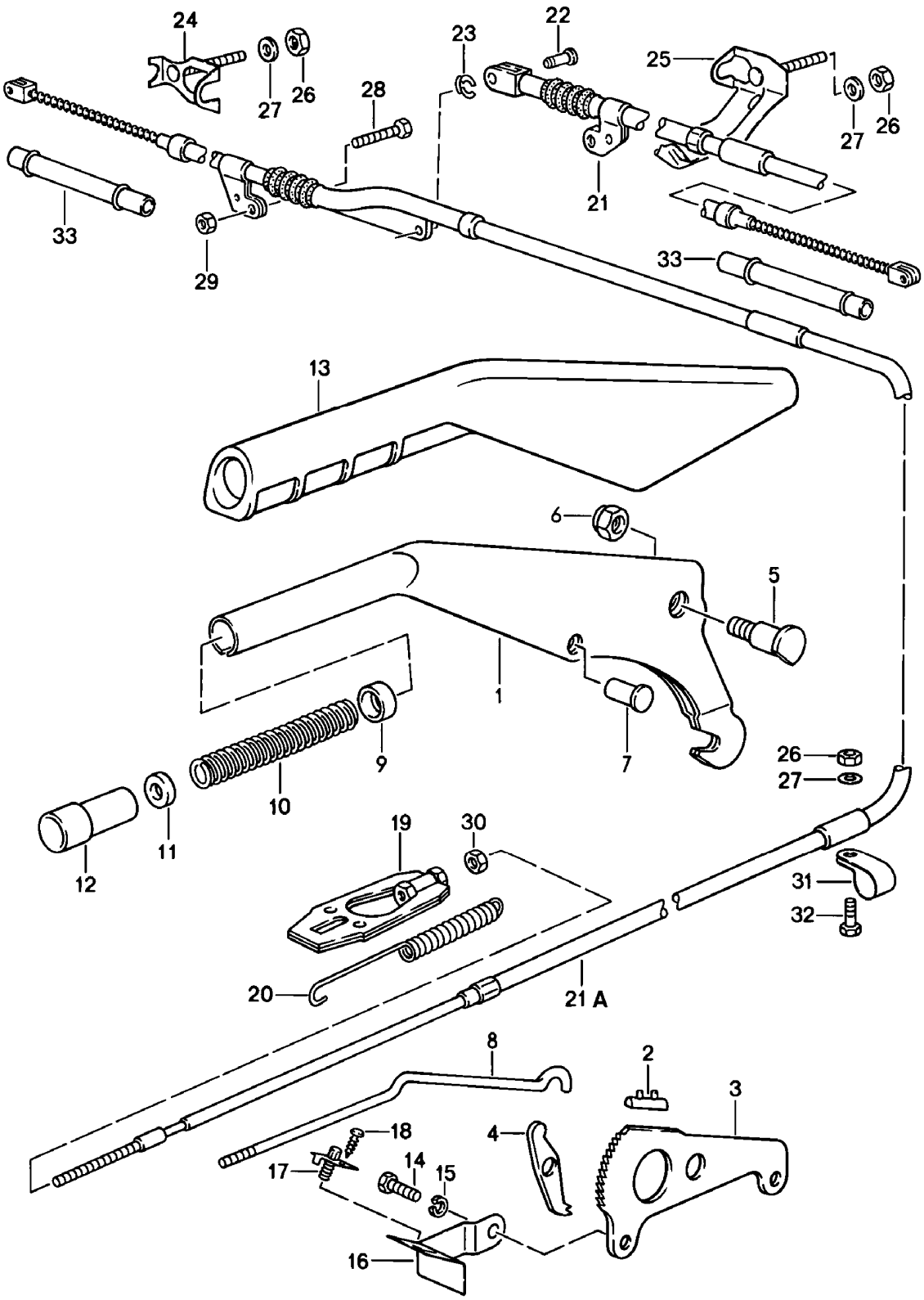

Model	Year	MG	SG	Illustration	Restrictions	UPD	7:17	27.10.2023
928	1978	7	01	701-010		738		

Pos	Part Number	Description	Remark	Qty	Model
		Actuator handbrake			
1	928 424 253 13	Brake lever		1	
2	901 424 509 01	Stop		1	
3	928 424 541 14	locking piece		1	
4	928 424 508 00	pawl		1	
5	928 424 527 00	bearing pin		1	
6	900 910 024 02	Locknut		1	
7	900 120 040 02	Rivet		1	
8	928 424 255 12	push rod		1	
9	914 424 258 00	guide sleeve		1	
10	901 424 543 00	Pressure spring		1	
11	901 424 593 01	ring for Brake lever		1	
12	928 424 523 12	press stud		1	
13	928 424 259 00	Brake lever trim for Brake lever		1	
14	N 010 239 11	Hexagon bolt M 8 X 18 Discontinued part		2	
14	N 010 239 30	Hexagon bolt M 8 X 18		2	
14	N 010 239 11	Hexagon bolt M 8 X 18 Discontinued part		2	
14	N 010 239 30	Hexagon bolt M 8 X 18		2	
15	900 027 015 02	spring ring B 8		2	
15	900 027 015 03	spring ring B 8		2	
16	928 424 535 00	Bracket	lhd	1	
(16)	927 424 535 00	Bracket	rhd	1	
17	113 947 561 G	Contact switch		1	
18	N 013 957 5	oval head panel screw B 3,5 X 9,5		1	

Model	Year	MG	SG	Illustration	Restrictions	UPD	7:17	27.10.2023
928	1978	7	01	701-010		738		

Pos	Part Number	Description	Remark	Qty	Model
19	928 424 033 00	tensioner		1	
20	477 711 975	Return spring		1	
21	928 424 551 16	brake cable	left	1	
21	928 424 551 17	brake cable	left short	1	
		also use:	PCG04311000	1	
21A	928 424 552 16	brake cable Discontinued part	right	1	
21A	928 424 552 17	brake cable	right long	1	
		also use:	PCG04311000	1	
22	999 166 048 02	Pin		1	
23	N 012 645 2	Retaining washer		1	
24	928 424 045 00	Bracket D - MJ 1980>>		2	
25	928 424 047 00	Bracket D >> - MJ 1979		1	
26	900 910 012 02	Locknut Discontinued part		3	
26	900 910 047 09	Locknut		3	
27	N 011 524 7	Washer Discontinued part		3	
27	N 011 524 27	Washer		3	
28	N 010 349 5	Hexagon bolt M 6 X 45 D >> - MJ 1979		2	
(28)	900 074 111 02	Hexagon bolt M 6 X 50 D - MJ 1980>>		2	
28	N 010 349 5	Hexagon bolt M 6 X 45 D - MJ 1980>>		2	PR:249
29	900 910 096 02	Locknut		2	
30	900 076 010 02	Nut Discontinued part		1	
30	900 076 010 0B	Nut		1	
30	900 076 010 03	Nut		1	
31	999 511 069 02	Clamp Discontinued part		1	

Model	Year	MG	SG	Illustration	Restrictions	UPD	7:17	27.10.2023
928	1978	7	01	701-010		738		

Pos	Part Number	Description	Remark	Qty	Model
31	999 511 069 0C	Clamp		1	
32	900 075 010 02	Hexagon nut M 6 X 12 Discontinued part		1	
32	N 010 212 14	Hexagon bolt M 6 X 12 Discontinued part		1	
32	999 072 005 09	Hexagon nut M 6 X 12 Discontinued part		1	
32	999 072 005 01	Hexagon bolt M 6 X 12		1	
33	928 424 405 01	guide tube		2	

Model	Year	MG	SG	Illustration	Restrictions	UPD	7:17	27.10.2023
928	1978	7	02	702-000		738		

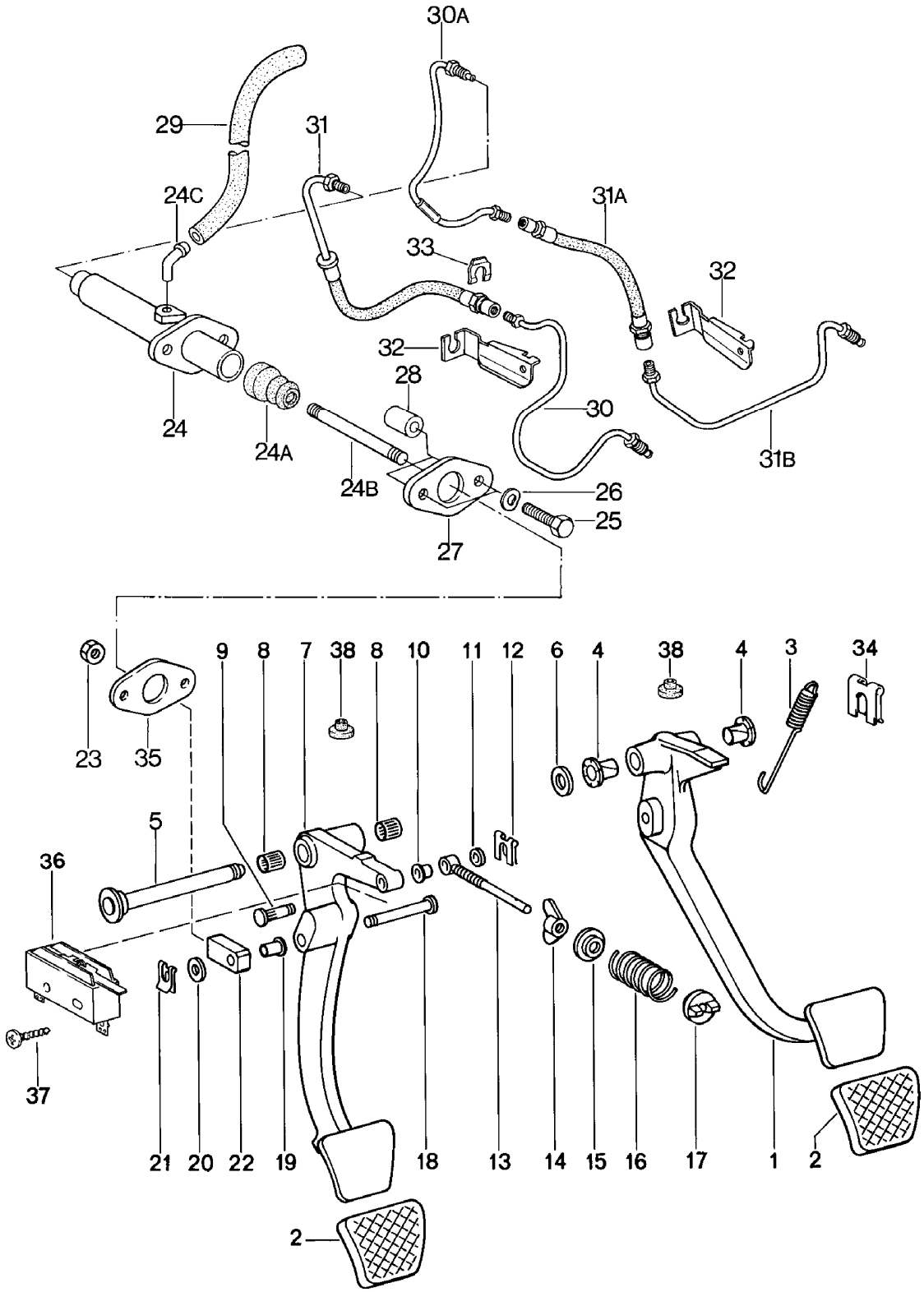

Model	Year	MG	SG	Illustration	Restrictions	UPD	7:17	27.10.2023
928	1978	7	02	702-000		738		

Pos	Part Number	Description	Remark	Qty	Model
		brake and clutch pedals cluster Insert Brake servo $ 10" F 92-89201 426>> F 92-89209 572>>			
1	928 423 501 05	Foot brake	lhd	1	
(1)	927 423 501 07	Foot brake	rhd	1	
(1)	928 423 515 01	Foot brake	lhd	1	PR:249
(1)	927 423 501 04	Foot brake	rhd	1	PR:249
2	928 423 210 03	Pedal cap		2	
(2)	928 423 211 00	Pedal cap		1	PR:249
3	928 423 531 02	Return spring D >> - MJ 1981		1	
(3)	928 423 531 03	Return spring D - MJ 1982>>		1	
4	928 423 542 00	Bearing bush		2	
5	928 423 037 02	shaft		1	
-	928 423 523 00	spacer sleeve		1	PR:249
(6)	N 011 565 3	Washer D >> - MJ 1980		2	
(6)	N 011 565 3	Washer D - MJ 1981>>		2	
7	928 423 311 06	Clutch pedal switch Discontinued part	lhd	1	
(7)	927 423 311 01	Clutch pedal switch	rhd	1	
(7)	928 423 313 00	Clutch pedal switch D >> - MJ 1980	lhd	1	
(7)	928 423 311 06	Clutch pedal switch D - MJ 1981>>	lhd	1	
8	900 317 001 00	needle bearing -		2	
9	928 423 355 00	Pin		1	
10	999 924 001 40	Bearing bush		1	
11	900 089 006 02	Washer		1	
11	900 089 006 01	Washer		1	
12	999 166 044 01	Retaining plate Discontinued part		1	

Model	Year	MG	SG	Illustration	Restrictions	UPD	7:17	27.10.2023
928	1978	7	02	702-000		738		

Pos	Part Number	Description	Remark	Qty	Model
12	999 166 044 0B	Retaining plate		1	
13	928 423 349 01	guide rod		1	
14	999 044 001 02	wing nut		1	
14	999 044 001 03	wing nut	M8	1	
15	928 423 353 00	spring disc		1	
16	928 423 357 04	Coupling servo spring		1	
17	928 423 351 00	spring bush		1	
18	928 423 513 00	Pin	lhd	1	
19	999 924 002 40	bush	lhd	1	
20	900 025 008 09	Washer Discontinued part	lhd	1	
20	900 025 008 04	Washer	lhd	1	
20	900 025 008 0E	Washer	yellow	1	
21	999 166 034 02	Retaining plate	lhd	1	
22	928 423 517 00	clevis Discontinued part	lhd	1	
22	928 423 517 01	clevis	lhd	1	
22A	999 168 017 40	ball socket	rhd	1	
23	900 076 025 02	Hexagon nut Discontinued part		1	
23	900 076 064 02	Hexagon nut		1	
24	928 423 193 00	Clutch master cylinder only in conj. with: Brake servo $ 9"		1	
(24)	928 423 173 06	Clutch master cylinder only in conj. with: Brake servo $ 10"	lhd	1	
(24)	927 423 173 02	Clutch master cylinder only in conj. with: Brake servo $ 10"	rhd	1	
24A	928 423 908 00	Bellows		1	
24B	928 423 187 00	piston rod	lhd	1	
(24B)	927 423 187 01	piston rod	rhd	1	

Model	Year	MG	SG	Illustration	Restrictions	UPD	7:17	27.10.2023
928	1978	7	02	702-000		738		

Pos	Part Number	Description	Remark	Qty	Model
24C	928 423 181 00	Knee piece only in conj. with: Brake servo $ 9" D >> - MJ 1979		1	
(24C)	477 721 177	Elbow fitting only in conj. with: Brake servo $ 10"		1	
25	N 010 340 4	Hexagon bolt M 8 X 40		2	
26	N 012 241 8	Spring washer		2	
27	928 423 521 00	Cover plate		1	
28	928 423 519 00	Spacer pipe		2	
-	999 181 021 50	Hose		*	
29		shorten to: only in conj. with: Brake servo $ 9" D >> - MJ 1979	330 MM	1	
(29)		shorten to: only in conj. with: Brake servo $ 10"	375 MM	1	
30	928 423 185 01	hydraulic clutch pipe only in conj. with: Brake servo $ 9" D >> - MJ 1979	lhd	1	
-		See technical information NR. 3/10			
30A	928 423 197 01	hydraulic clutch pipe only in conj. with: Brake servo $ 10" D - MJ 1980>>	lhd	1	
(30)	927 423 185 00	hydraulic clutch pipe	rhd	1	
31	928 423 177 01	Pipe/hose line only in conj. with: Brake servo $ 9" D >> - MJ 1979 Discontinued part	lhd	1	
31	928 423 177 11	Pipe/hose line only in conj. with: Brake servo $ 9"	lhd	1	

Model	Year	MG	SG	Illustration	Restrictions	UPD	7:17	27.10.2023
928	1978	7	02	702-000		738		

Pos	Part Number	Description	Remark	Qty	Model
31A	928 423 177 03	Pipe/hose line only in conj. with: Brake servo $ 10" D - MJ 1980>> Discontinued part	lhd	1	
31A	928 423 177 12	Pipe/hose line only in conj. with: Brake servo $ 10" D - MJ 1980>>	lhd	1	
(31)	928 423 177 01	Pipe/hose line Discontinued part	rhd	1	
(31)	928 423 177 11	Pipe/hose line	rhd	1	
31B	928 423 199 01	hydraulic clutch pipe only in conj. with: Brake servo $ 10" D - MJ 1980>>	lhd	1	
32	928 423 189 00	Bracket only in conj. with: Brake servo $ 9" D >> - MJ 1979	lhd	1	
32	928 423 189 01	Bracket only in conj. with: Brake servo $ 10" D - MJ 1980>>	lhd	1	
(32)	928 423 221 01	Bracket only in conj. with: Brake servo $ 10" D - MJ 1980>>	lhd	1	
-		Fasteners for Bracket 928.423.189.01			
-	N 011 010 6	Hexagon nut Discontinued part		1	
-	N 101 552 10	Hexagon nut		1	
-	900 025 008 09	Washer B 10,5 Discontinued part		1	
-	900 025 008 04	Washer B 10,5		1	
-	900 025 008 0E	Washer B 10,5	yellow	1	

Model	Year	MG	SG	Illustration	Restrictions	UPD	7:17	27.10.2023
928	1978	7	02	702-000		738		

Pos	Part Number	Description	Remark	Qty	Model
(32)	927 423 189 00	Bracket	rhd	1	
33	928 423 183 01	Hose bracket		2	
34	N 012 654 1	Retaining washer		1	
35	928 423 191 00	Seal		1	
36	928 613 413 01	Micro switch		1	
37	900 143 013 02	oval head panel screw B 2,9 X 16		2	
38	999 703 183 40	Stop buffer		2	
-		Height corrector 15 MM brake pedal Clutch pedal switch			
-	928 423 207 00	distance plate		2	
-	928 423 213 00	distance plate		1	PR:249
-	900 067 057 02	Socket head bolt M 8 X 20 Discontinued part		2	
-	900 067 057 03	Socket head bolt M 8 X 20		2	
-	900 115 013 01	Spring washer See technical information GR. X NR.15 not for: USA Height corrector 30 MM brake pedal Clutch pedal switch		2	
-	928 423 207 00	distance plate		4	
-	928 423 213 00	distance plate		2	PR:249
-	900 067 081 02	Socket head bolt M 8 X 35 Discontinued part		2	
-	900 067 102 02	Socket head bolt M 8 X 35		2	
-	900 115 013 01	Spring washer See technical information GR. X NR.15		2	

Model	Year	MG	SG	Illustration	Restrictions	UPD	7:17	27.10.2023
928	1978	7	02	702-005		738		

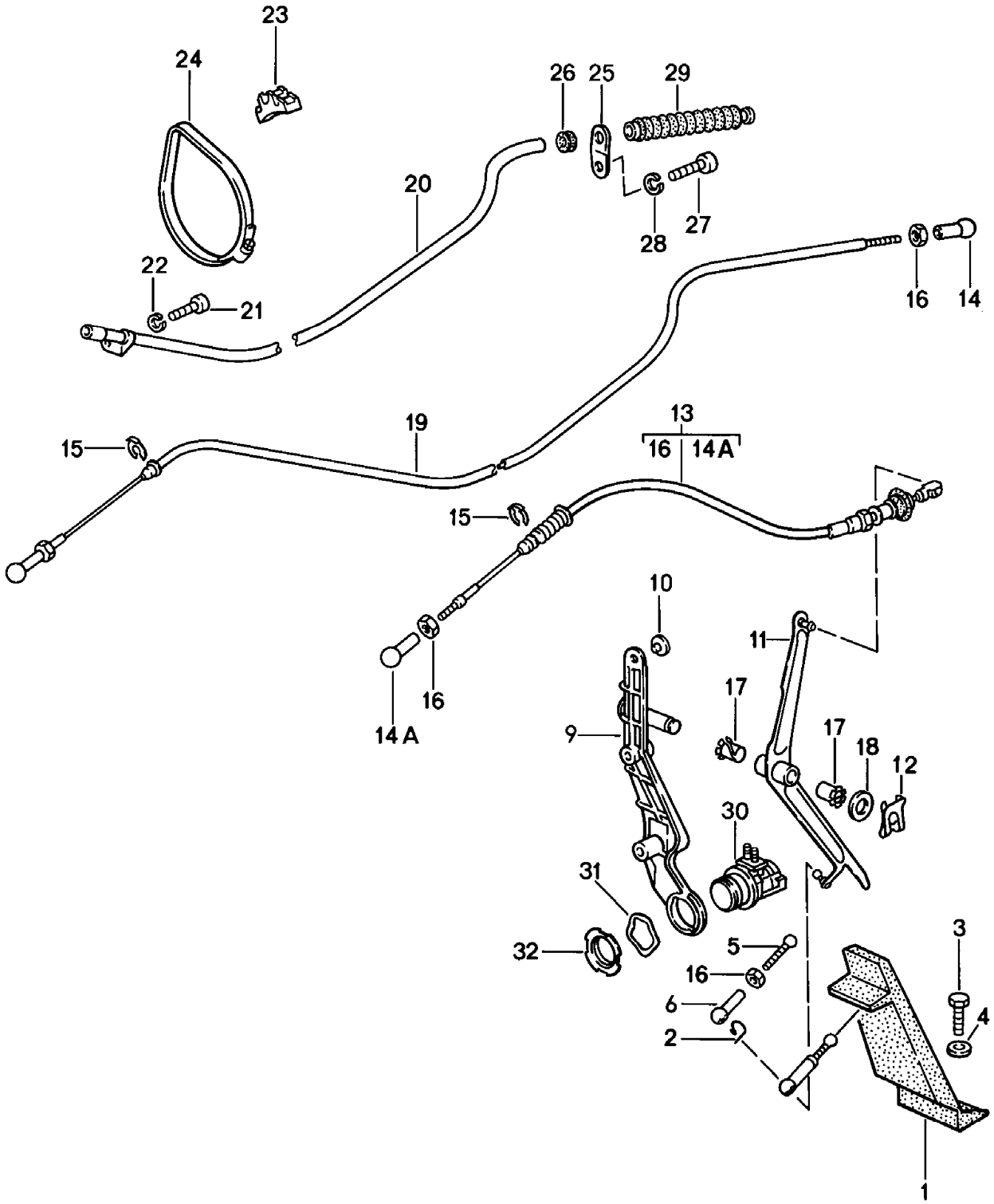

Model	Year	MG	SG	Illustration	Restrictions	UPD	7:17	27.10.2023
928	1978	7	02	702-005		738		

Pos	Part Number	Description	Remark	Qty	Model
		throttle control			
1	911 423 111 02	Accelerator pedal Discontinued part		1	
1	911 423 111 03	Accelerator pedal		1	
2	900 169 014 02	Securing bars Discontinued part		1	
2	900 169 014 01	Securing bars		1	
3	999 072 005 09	Hexagon nut M 6 X 12 Discontinued part		2	
3	999 072 005 01	Hexagon bolt M 6 X 12		2	
4	N 011 666 7	Washer		2	
5	928 423 119 00	push rod	lhd	1	
(5)	927 423 119 00	push rod	rhd	1	
6	911 423 147 00	ball socket		1	
-	928 423 117 03	Stop		1	
-	928 423 025 00	Stop		1	
9	928 423 021 01	Bracket F >> 92-88100 656	lhd	1	
(9)	928 423 021 03	Bracket F 92-88100 657>>	lhd	1	
-	900 076 010 02	Nut D >> - MJ 1979 Discontinued part	lhd	2	
-	900 076 010 0B	Nut D >> - MJ 1979	lhd	2	
-	900 076 010 03	Nut	lhd	2	
-	N 012 226 5	Spring washer D >> - MJ 1979	lhd	2	
(9)	927 423 129 03	Bracket	rhd	1	
-	900 076 025 02	Hexagon nut D >> - MJ 1979 Discontinued part	rhd	2	
-	900 076 064 02	Hexagon nut	rhd	2	
-	N 012 241 8	Spring washer D >> - MJ 1979	rhd	2	
10	999 703 183 40	Stop buffer		1	

Model	Year	MG	SG	Illustration	Restrictions	UPD	7:17	27.10.2023
928	1978	7	02	702-005		738		

Pos	Part Number	Description	Remark	Qty	Model
11	928 423 250 05	relay lever F >> 92-88100 656	lhd	1	
(11)	928 423 250 05	relay lever F 92-88100 657>>	lhd	1	
(11)	927 423 250 02	relay lever	rhd	1	
12	999 166 034 02	Retaining plate		1	
13	928 423 023 06	accelerator cable also use:	lhd 92842307103	1 1	
(13)	927 423 023 01	accelerator cable	rhd	1	
-	927 423 025 01	guide tube	rhd	1	
14	N 015 521 3	ball socket		2	
14A	911 423 147 00	ball socket		1	
15	999 166 046 02	fuse		2	
16	900 076 027 02	Nut		3	
17	999 924 002 40	bush		2	
18	900 025 008 02	Washer Discontinued part		1	
18	900 025 008 09	Washer Discontinued part		1	
18	900 025 008 04	Washer		1	
18	900 025 008 0E	Washer	yellow	1	
19	928 423 071 03	Cable D >> - MJ 1979 Discontinued part		1	PR:249
19	928 423 071 03	Cable also use:	 PCG04311000	1 1	PR:249
20	928 423 073 01	guide tube		1	PR:249
21	900 075 010 02	Hexagon nut M 6 X 12 Discontinued part		1	PR:249
21	N 010 212 14	Hexagon bolt M 6 X 12 Discontinued part		1	PR:249
21	999 072 005 09	Hexagon nut M 6 X 12 Discontinued part		1	PR:249
21	999 072 005 01	Hexagon bolt M 6 X 12		1	PR:249

Model	Year	MG	SG	Illustration	Restrictions	UPD	7:17	27.10.2023
928	1978	7	02	702-005		738		

Pos	Part Number	Description	Remark	Qty	Model
22	N 012 226 5	Spring washer Discontinued part		1	PR:249
22	N 012 226 5	Spring washer		1	PR:249
23	928 423 141 00	Bracket		2	PR:249
24	999 512 355 02	Hose clamp Discontinued part		2	PR:249
24	999 512 355 01	Hose clamp		2	PR:249
25	928 423 143 00	Bracket		1	PR:249
26	999 702 119 50	Rubber grommet		1	PR:249
27	N 010 237 6	Hexagon bolt M 8 X 12 Discontinued part		1	PR:249
27	N 010 237 14	Hexagon bolt M 8 X 12		1	PR:249
28	900 027 015 02	spring ring B 8		1	PR:249
28	900 027 015 03	spring ring B 8		1	PR:249
29	928 423 277 00	Seal		1	PR:249
30	928 606 111 00	kick down actuator		1	PR:249
31	928 613 419 00	Spring washer		1	PR:249
32	928 613 421 00	castellated nut M 28 X 1,5		1	PR:249
-		Height corrector Accelerator pedal 15 MM			
-	928 423 025 00	Stop D >> - MJ 1978		1	
-	928 423 133 04	Stop D - MJ 1979>>		1	
-	928 423 119 01	push rod	lhd	1	
-	927 423 119 01	push rod	rhd	1	
-	911 423 147 00	ball socket		1	
-	N 011 005 14	Hexagon nut Discontinued part		1	
-	900 076 091 01	Hexagon nut		1	

Model	Year	MG	SG	Illustration	Restrictions	UPD	7:17	27.10.2023
928	1978	7	02	702-005		738		

Pos	Part Number	Description	Remark	Qty	Model
-		**Height corrector Accelerator pedal 30 MM**			
-	**928 423 025 01**	**Stop D >> - MJ 1978**		**1**	
-	**928 423 133 05**	**Stop D - MJ 1979>>**		**1**	
-	**928 423 119 02**	**push rod**	**lhd**	**1**	
-	**927 423 119 01**	**push rod**	**rhd**	**1**	
-	**911 423 147 00**	**ball socket**		**1**	
-	**900 076 027 02**	**Nut**		**1**	
-		**See technical information GR. X NR.15**			

Model	Year	MG	SG	Illustration	Restrictions	UPD	7:17	27.10.2023
928	1978	8	01	801-000		738		

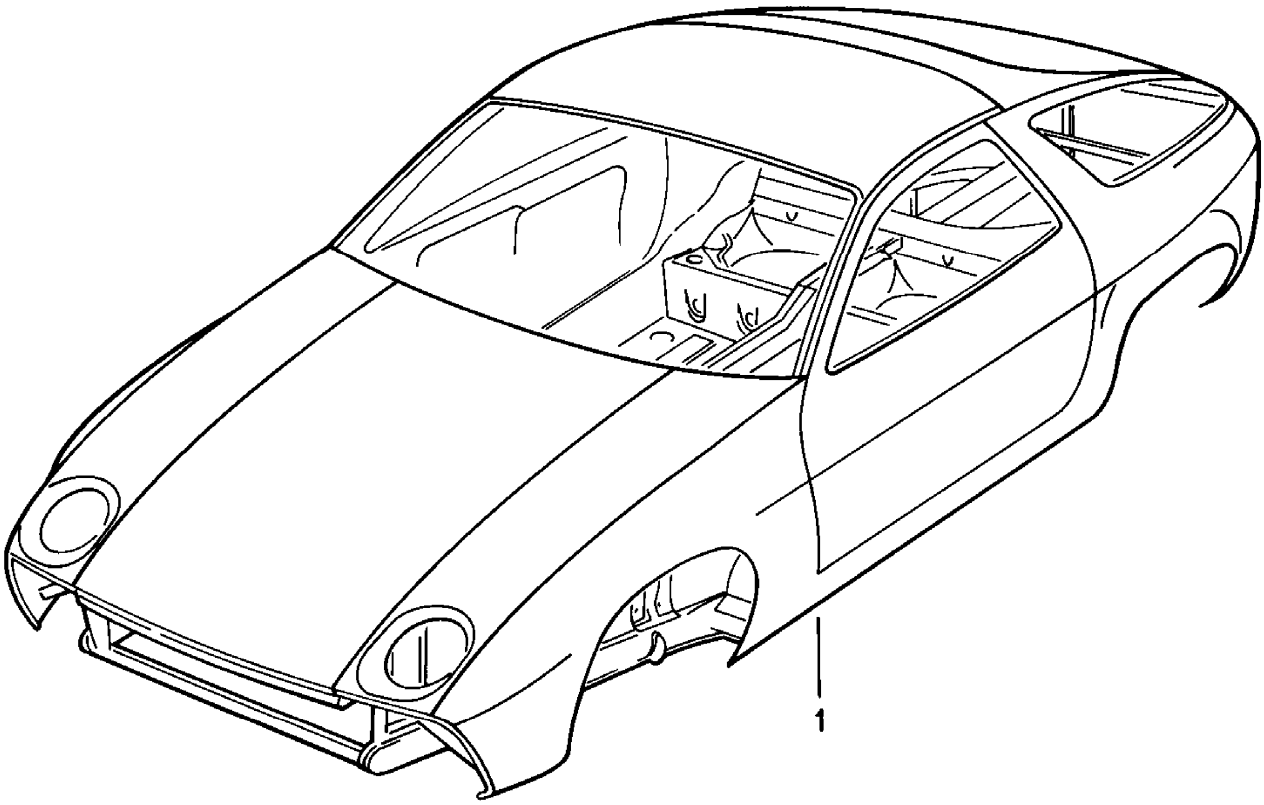

Model	Year	MG	SG	Illustration	Restrictions	UPD	7:17	27.10.2023
928	1978	8	01	801-000		738		

Pos	Part Number	Description	Remark	Qty	Model
		Car body primed with: Underbody protection Bodies can only be delivered from the current model year			
-		to use before: F >> 92-89100 769 F >> 92-89200 528 F >> 92-89209 535 also use:	928 375 011 04		
1	928 500 901 02	Car body	lhd	1	
(1)	928 500 901 03	Car body	lhd	1	AUT.
(1)	928 500 901 05	Car body	rhd	1	
(1)	928 500 901 07	Car body	rhd	1	AUT.
(1)	928 500 901 60	Car body	lhd	1	PR:650
(1)	928 500 901 61	Car body	lhd	1	AUT. PR:650
(1)	928 500 901 63	Car body	rhd	1	PR:650
(1)	928 500 901 65	Car body	rhd	1	AUT. PR:650
-		Car body			
-		Bodies can only be delivered from the current model year			

Model	Year	MG	SG	Illustration	Restrictions	UPD	7:18	27.10.2023
928	1978	8	01	801-005		738		

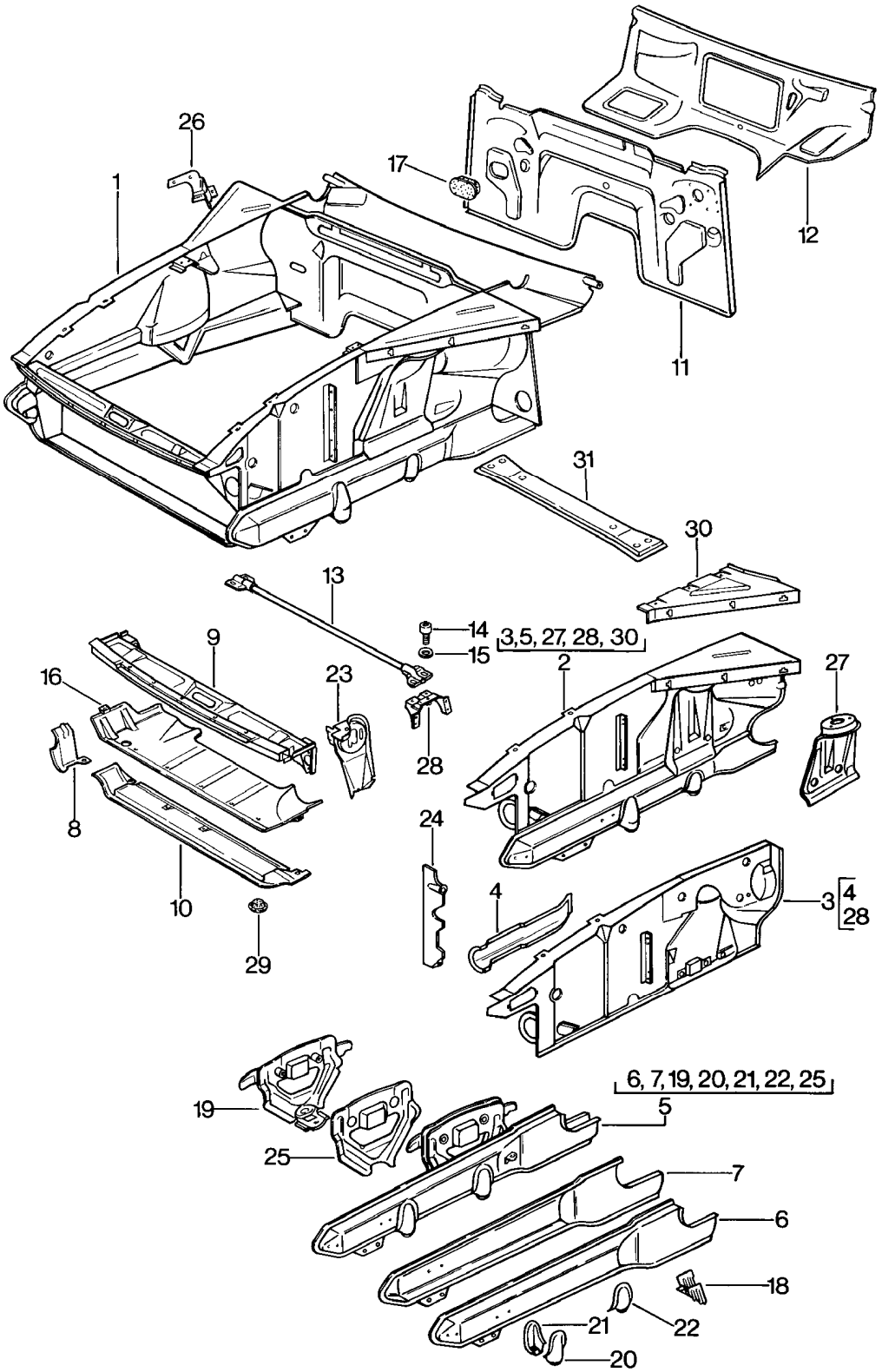

Model	Year	MG	SG	Illustration	Restrictions	UPD	7:18	27.10.2023
928	1978	8	01	801-005		738		

Pos	Part Number	Description	Remark	Qty	Model
		Front end			
1	928 501 949 05	Front end Discontinued part	lhd	1	
1	927 501 949 05	Front end also use: Discontinued part	rhd 928 722 101 05	1	
2	928 501 947 05	Wheel housing with: Carrier	left lhd	1	
(2)	928 501 014 02	Wheel housing with: Carrier D - MJ 1978>> - MJ 1978 Discontinued part	right lhd	1	
2	928 501 948 05	Wheel housing	right lhd	1	
	08/77-07/82GRV	primed Carrier			
2	927 501 947 05	Wheel housing	left rhd	1	
	08/77-07/82GRV	primed with: Carrier			
2	927 501 948 05	Wheel housing	right rhd	1	
	08/77-07/82GRV	primed with: Carrier also use:	928 722 101 05		
3	927 501 035 02	Wheel housing D >> - MJ 1981 Discontinued part	left rhd	1	
3	927 501 035 03	Wheel housing D - MJ 1982>> - MJ 1982	left rhd	1	
3	928 501 036 03	Wheel housing	right lhd	1	
3	927 501 036 02	Wheel housing D >> - MJ 1981 Discontinued part	right rhd	1	
3	927 501 036 03	Wheel housing D - MJ 1982>> - MJ 1982	right rhd	1	
4	928 501 121 02	Carrier Shock absorber		2	
4	928 501 121 02	Carrier		2	
	08/77-07/82GRV	primed			

Model	Year	MG	SG	Illustration	Restrictions	UPD	7:18	27.10.2023
928	1978	8	01	801-005		738		

Pos	Part Number	Description	Remark	Qty	Model
5	928 501 915 00	Side member Discontinued part	left	1	
(5)	928 501 916 00	Side member See TPI GR.8 NR.3 Discontinued part	right	1	
5	928 501 915 01	Carrier Discontinued part	left	1	
5	928 501 915 01	Carrier	left	1	
	08/77-07/82GRV	primed			
(5)	928 501 916 01	Carrier See TPI GR.8 NR.3 Discontinued part	right	1	
(5)	928 501 916 01	Carrier See TPI GR.8 NR.3	right	1	
	08/77-07/82GRV	primed			
6	928 501 105 02	Carrier	left outer	1	
(6)	928 501 106 02	Carrier	right outer	1	
(6)	928 501 106 02	Carrier	right	1	
	08/77-07/82GRV	primed			
7	928 501 103 02	Carrier	left inner	1	
(7)	928 501 104 02	Carrier	right inner	1	
(7)	928 501 104 02	Carrier	right	1	
	08/77-07/82GRV	primed			
(8)	928 501 129 02	Connection piece	left	1	
8	928 501 130 02	Connection piece	right	1	
9	928 501 033 02	Cross panel	front	1	
10	928 501 031 03	Cross member	front	1	
11	928 502 201 02	Firewall	lhd	1	
11	928 502 201 02	Firewall	lhd	1	
	08/77-07/82GRV	primed			
12	928 502 203 02	Cross panel	lhd	1	

Model	Year	MG	SG	Illustration	Restrictions	UPD	7:18	27.10.2023
928	1978	8	01	801-005		738		

Pos	Part Number	Description	Remark	Qty	Model
13	928 504 061 02	Transverse strut Engine bay		1	
14	900 119 053 02	Socket head bolt 10 X 16		4	
15	900 025 008 09	Washer 10,5 Discontinued part		4	
15	900 025 008 04	Washer 10,5		4	
15	900 025 008 0E	Washer 10,5	yellow	4	
16	928 504 941 04	Protective plate		1	
17	928 504 357 02	Water drain valve D >> - MJ 1979 Discontinued part		1	
(17)	928 504 357 02	Water drain valve D - MJ 1980>> - MJ 1980 Discontinued part		1	
17	928 504 357 02	Water drain valve D - MJ 1981>>		1	
18	928 501 307 02	Console for Anti-roll bar	left	1	
18	928 501 307 02	Console	left	1	
	08/77-07/82GRV	primed for Anti-roll bar			
(18)	928 501 308 02	Console for Anti-roll bar	right	1	
19	928 501 047 02	Support	left	1	
(19)	928 501 048 02	Support	right	1	
20	928 501 139 02	Console	left	1	
(20)	928 501 140 02	Console	right	1	
21	928 501 135 02	Console	left	1	
(21)	928 501 136 02	Console	right	1	
22	928 501 195 02	Console	left	1	
(22)	928 501 196 02	Console	right	1	

Model	Year	MG	SG	Illustration	Restrictions	UPD	7:18	27.10.2023
928	1978	8	01	801-005		738		

Pos	Part Number	Description	Remark	Qty	Model
23	928 501 127 02	Console Engine Pop-up headlight		1	
23	928 501 127 02 08/77-07/82GRV	Console primed Engine Pop-up headlight		1	
24	928 501 811 02	Trim for Cooler for coolant	left	1	
(24)	928 501 812 02	Trim for Cooler for coolant	right	1	
25	928 501 191 02	Support for Wheel housing	left	1	
(25)	928 501 192 02	Support for Wheel housing	right	1	
26	928 501 313 02	Retaining bracket Reservoir	lhd	1	
(26)	927 501 313 02	Retaining bracket Reservoir	rhd	1	
27	928 501 113 02	Reinforcement suspension strut bearing	left	1	
(27)	928 501 114 02	Reinforcement suspension strut bearing	right	1	
28	928 501 551 02	Bracket Transverse strut		2	
(29)	803 803 583 A	Bungs Discontinued part		9	
(29)	999 703 196 40	End cap		9	
30	928 501 081 02	Side member		1	
(30)	928 501 082 02	Side member		1	
31	928 501 091 02	Cross member D - MJ 1978>> - MJ 1978		1	

Model	Year	MG	SG	Illustration	Restrictions	UPD	7:18	27.10.2023
928	1978	8	01	801-010		738		

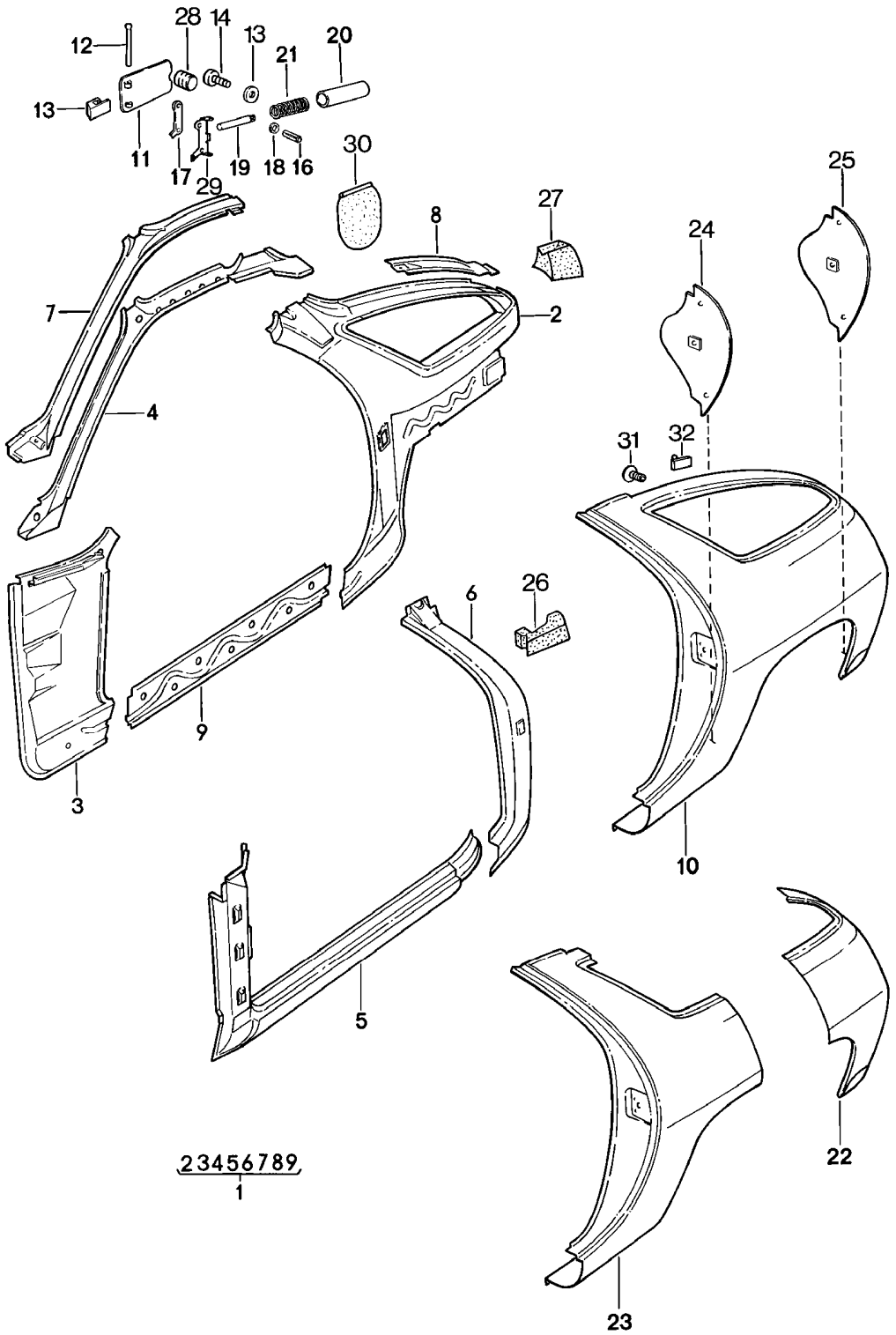

Model	Year	MG	SG	Illustration	Restrictions	UPD	7:18	27.10.2023
928	1978	8	01	801-010		738		

Pos	Part Number	Description	Remark	Qty	Model
		Frame Side part			
1	928 502 011 02	Side part	left inner	1	
(1)	928 502 012 02	Side part	right inner	1	
2	928 502 017 02	Side part	left rear, inner	1	
(2)	928 502 017 04	Side part	rear, inner	1	
(2)	928 502 018 02	Side part	right rear, inner	1	
3	928 502 013 02	Side part Discontinued part	left front, inner	1	
3	928 502 013 09	Side part	left lhd front, inner	1	
(3)	927 502 013 09	Side part	left rhd front, inner	1	
(3)	928 502 014 02	Side part Discontinued part	right front, inner	1	
(3)	928 502 014 09	Side part	right lhd front, inner	1	
4	928 502 301 02	roof frame	left side	1	
(4)	928 502 302 02	roof frame	right side	1	
5	928 502 015 02	Side member	left	1	
5	928 502 015 02	Side member	left	1	
	08/77-07/82GRV	primed			
(5)	928 502 016 02	Side member	right	1	
6	928 502 051 02	b-pillar, inner	left	1	
(6)	928 502 052 02	b-pillar, inner	right	1	
7	928 502 331 02	roof frame	left side	1	
(7)	928 502 332 02	roof frame	right side	1	
8	928 502 033 02	frame part	left	1	
(8)	928 502 034 02	frame part	right	1	

Model	Year	MG	SG	Illustration	Restrictions	UPD	7:18	27.10.2023
928	1978	8	01	801-010		738		

Pos	Part Number	Description	Remark	Qty	Model
9	928 502 111 02	Web plate		2	
10	928 503 061 02	Side part F >> 92-BS800 192 F >> 92-BS840 296	left outer	1	928 928S
(10)	928 503 061 12	Side part F 92-BS800 193>> F 92-BS840 297>>	left outer	1	928 928S
(10)	928 503 062 02	Side part F >> 92-BS800 192 F >> 92-BS840 296	right outer	1	928 928S
(10)	928 503 062 12	Side part F 92-BS800 193>> F 92-BS840 297>>	right outer	1	928 928S
11	928 504 301 02	Flap		1	
12	928 504 313 02	axle		1	
13	928 504 326 02	Stop		1	
14	N 014 133 8	fillister hd. bolt M 5 X 12 Discontinued part		2	
14	N 014 133 I	fillister hd. bolt M 5 X 12		2	
15	900 151 027 02	Washer B 5,3 Discontinued part		2	
15	900 151 027 03	Washer B 5,3		2	
16	900 095 036 02	Spring pin 2 X 8		1	
17	928 504 335 02	Underlay		1	
18	928 504 347 02	Washer		1	
19	928 504 341 02	guide rod		1	
20	928 504 343 02	Protective hose		1	
21	928 504 345 02	Pressure spring		1	
22	928 503 911 02	Sectional part - side panel F >> 92-BS800 192 F >> 92-BS840 296	left rear	1	928 928S

Model	Year	MG	SG	Illustration	Restrictions	UPD	7:18	27.10.2023
928	1978	8	01	801-010		738		

Pos	Part Number	Description	Remark	Qty	Model
22	928 503 911 06	Sectional part - side panel F 92-BS800 193>> F 92-BS840 297>>	left rear	1	 928 928S
(22)	928 503 912 02	Sectional part - side panel F >> 92-BS800 192 F >> 92-BS840 296	right rear	1	 928 928S
22	928 503 062 12	Side part F 92-BS800 193>> F 92-BS840 297>>	right rear	1	 928 928S
23	928 503 061 14	Side part Side part	left front	1	
(23)	928 503 062 12	Side part Side part	right front	1	
24	928 504 303 02	wheel cover	left	1	
(24)	928 504 304 02	wheel cover	right	1	
25	928 504 309 02	wheel cover Discontinued part	left rear	1	
25	928 504 309 05	wheel cover	left rear	1	
26	928 504 281 02	Seal b-pillar, inner	left	1	
(26)	928 504 282 02	Seal b-pillar, inner	right	1	
27	928 504 283 02	Seal	left	1	
(27)	928 504 284 02	Seal	right	1	
28	999 703 135 40	Rubber buffer		1	
29	928 504 325 02	hinge half		1	
30	928 201 057 02	Protective cloth		1	
31	261 829 419	Bungs D >> - MJ 1979		4	
31	999 015 005 07	Round-head screw D - MJ 1980>>		4	
32	928 503 621 02	Suspension mounting		2	

Model	Year	MG	SG	Illustration	Restrictions	UPD	7:18	27.10.2023
928	1978	8	01	801-015		738		

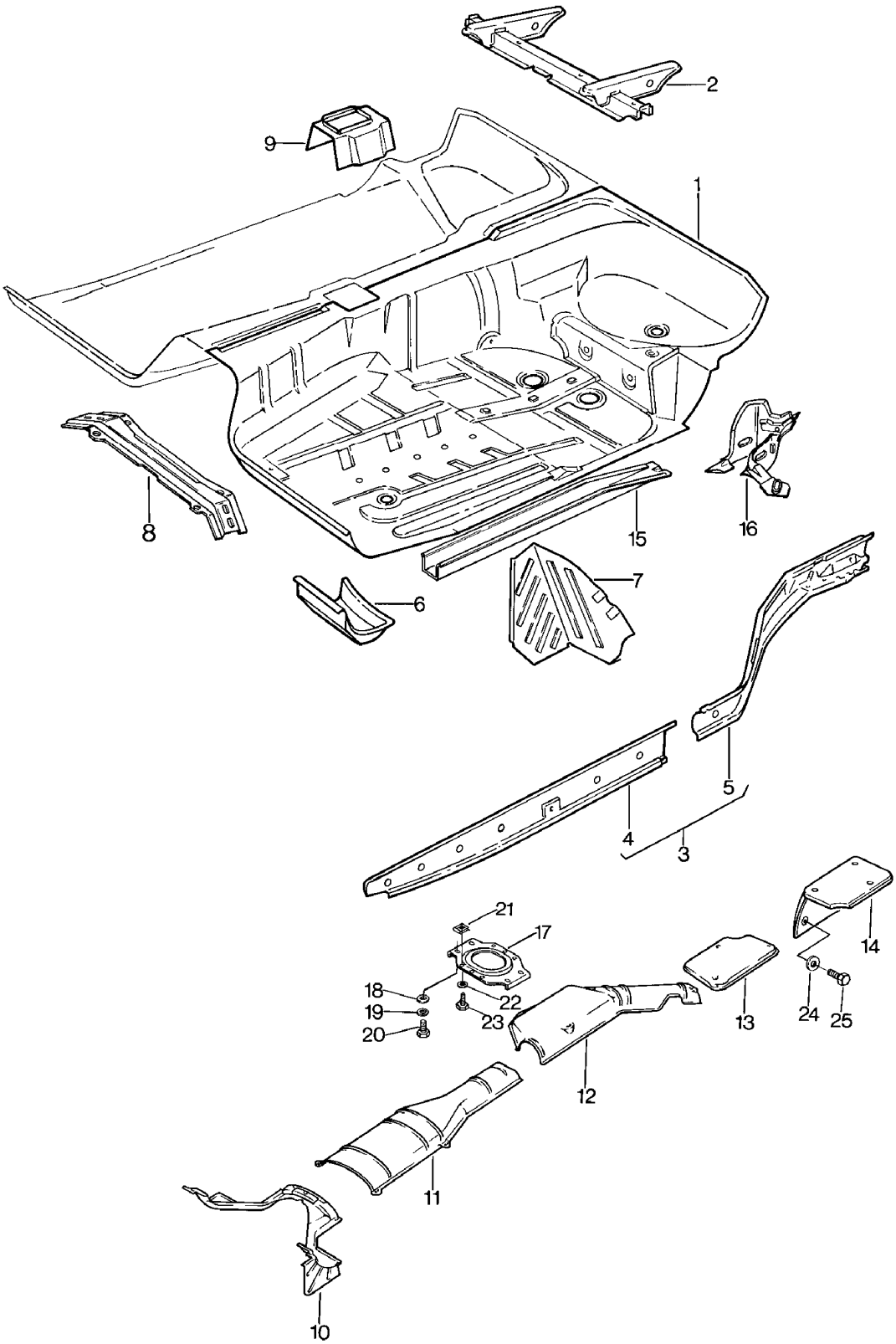

Model	Year	MG	SG	Illustration	Restrictions	UPD	7:18	27.10.2023
928	1978	8	01	801-015		738		

Pos	Part Number	Description	Remark	Qty	Model
		Bottom plate Frame	center		
1	928 501 053 02	Bottom plate D >> - MJ 1979 Discontinued part	left	1	
(1)	928 501 953 03	Bottom plate D - MJ 1980>>	left	1	
(1)	928 501 054 02	Bottom plate D - MJ 1978>> - MJ 1978 Discontinued part	right	1	
(1)	928 501 054 03	Bottom plate D >> - MJ 1981	right	1	
(1)	928 501 954 03	Bottom plate D - MJ 1982>>	right	1	
2	928 501 055 02	Seat support D - MJ 1978>> - MJ 1978	left	1	
(2)	928 501 055 60	Seat support	left	1	
(2)	928 501 055 60	Seat support	left	1	
	08/77-07/82GRV	primed			
(2)	928 501 056 02	Seat support D - MJ 1978>> - MJ 1978	right	1	
(2)	928 501 056 60	Seat support	right	1	
(2)	928 501 056 60	Seat support	right	1	
	08/77-07/82GRV	primed			
3	928 501 021 02	Side member	left	1	
(3)	928 501 022 02	Side member	right	1	
4	928 501 023 02	Carrier 1	left	1	
(4)	928 501 024 02	Carrier 2	right	1	
5	928 501 025 02	Carrier 3	left	1	
(5)	928 501 026 02	Carrier 3	right	1	
6	928 501 093 02	Junction plate	left	1	
(6)	928 501 094 02	Junction plate	right	1	
7	928 551 071 02	Foot rest	lhd	1	
7	927 551 071 02	Foot rest	rhd	1	

Model	Year	MG	SG	Illustration	Restrictions	UPD	7:18	27.10.2023
928	1978	8	01	801-015		738		

Pos	Part Number	Description	Remark	Qty	Model
8	928 501 901 05	Cross member D - MJ 1979>>		1	
9	928 501 059 02	Reinforcement gearshift lever Support		1	
9	928 501 059 02	Reinforcement		1	
	08/77-07/82GRV	primed			
-	927 504 655 02	bearing plate FUER PEDALERIE		1	
-	900 076 010 02	Nut M 6 Discontinued part		3	
-	900 076 010 0B	Nut M 6		3	
-	900 076 010 03	Nut M 6		3	
-	900 151 003 02	Washer A 6,4 Discontinued part		3	
-	900 151 006 03	Washer A 6,4		3	
10	928 504 921 02	Heat shield plate D >> - MJ 1979		1	
(10)	928 504 921 05	Heat shield plate D - MJ 1980>>		1	
11	928 504 925 03	Heat shield plate D >> - MJ 1979		1	
(11)	928 504 925 06	Heat shield plate D - MJ 1980>>		1	
(11)	928 504 491 01	Heat shield plate D - MJ 1980>> - MJ 1982 Discontinued part		1	
12	928 504 931 04	Heat shield plate D >> - MJ 1979		1	
(12)	928 504 931 04	Heat shield plate D - MJ 1980>> Discontinued part		1	
(12)	928 504 931 04	Heat shield plate D - MJ 1980>>		1	
13	928 504 935 02	Heat shield plate D >> - MJ 1978		1	

Model	Year	MG	SG	Illustration	Restrictions	UPD	7:18	27.10.2023
928	1978	8	01	801-015		738		

Pos	Part Number	Description	Remark	Qty	Model
14	928 504 051 02	Heat shield plate D - MJ 1979>>		1	
15	928 501 577 02	Side member Discontinued part	left	1	
15	928 501 577 02	Side member	left	1	
	08/77-07/82GRV	primed			
15	928 501 578 50	Side member Discontinued part	right	1	
15	928 501 578 50	Side member	right	1	
	08/77-07/82GRV	primed			
16	928 501 067 02	Bracket	left	1	
16	928 501 068 02	Bracket	right	1	
17	928 501 495 02	Connecting bridge For seat belt		1	
18	900 025 007 02	Washer 8,4 Discontinued part		4	
18	900 025 007 03	Washer 8,4		4	
19	900 027 015 02	spring ring B 8		4	
19	900 027 015 03	spring ring B 8		4	
20	900 075 087 02	Hexagon bolt M 8 X 16 Discontinued part		4	
20	900 075 087 03	Hexagon bolt M 8 X 16		4	
20	900 075 087 04	Hexagon bolt M 8 X 16	M8X16 yellow	4	
21	999 591 487 02	panel nut B 5,5		16	
22	N 011 666 7	Washer B 6,4		16	
23	900 187 115 02	Bolt with washer B 5,5 X 16 Discontinued part		16	
23	900 187 115 01	Bolt with washer B 5,5 X 16		16	

Model	Year	MG	SG	Illustration	Restrictions	UPD	7:18	27.10.2023
928	1978	8	01	801-015		738		

Pos	Part Number	Description	Remark	Qty	Model
24	N 011 524 7	Washer B 6,4 D - MJ 1979>> Discontinued part		2	
24	N 011 524 27	Washer B 6,4 D - MJ 1979>>		2	
25	N 010 210 13	Hexagon bolt M 6 X 10 D - MJ 1979>>		2	

Model	Year	MG	SG	Illustration	Restrictions	UPD	7:18	27.10.2023
928	1978	8	01	801-020		738		

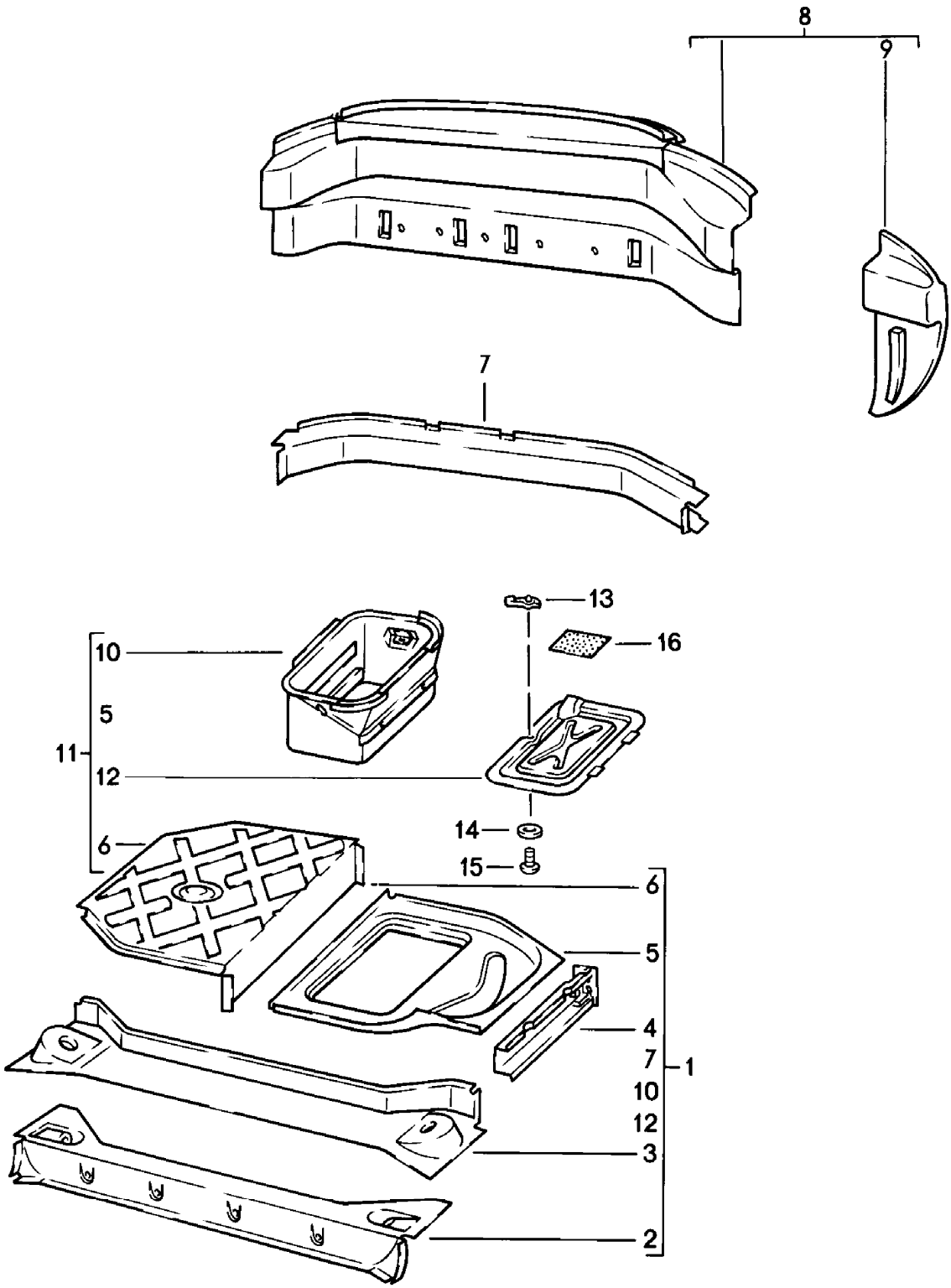

Model	Year	MG	SG	Illustration	Restrictions	UPD	7:18	27.10.2023
928	1978	8	01	801-020		738		

Pos	Part Number	Description	Remark	Qty	Model
		Frame Rear end	rear		
1	928 501 071 02	Rear end D - MJ 1978>> - MJ 1978 Discontinued part		1	
(1)	928 501 071 03	Rear end D - MJ 1979>> Discontinued part		1	
(1)	928 501 071 03	Rear end D - MJ 1979>>		1	
	08/78-07/82GRV	primed			
2	928 501 515 02	Cross member Lower part Discontinued part		1	
2	928 501 515 02	Cross member Lower part		1	
	08/77-07/82GRV	primed			
3	928 501 715 02	Cross member Discontinued part		1	
3	928 501 715 02	Cross member		1	
	08/77-07/82GRV	primed			
4	928 501 207 02	Extension	left	1	
(4)	928 501 208 02	Extension Discontinued part	right	1	
5	928 501 701 02	Bottom plate Discontinued part	left	1	
5	928 501 701 02	Bottom plate	left	1	
	08/77-07/82GRV	primed			
6	928 501 702 02	Bottom plate	right	1	
7	928 501 079 02	Cross member		1	
8	928 502 081 04	Cross panel Discontinued part	lhd	1	
8	928 502 081 04	Cross panel	lhd	1	
	08/77-07/82GRV	primed			
8	927 502 081 04	Cross panel Discontinued part	rhd	1	
8	927 502 081 04	Cross panel	rhd	1	
	08/77-07/82GRV	primed			

Model	Year	MG	SG	Illustration	Restrictions	UPD	7:18	27.10.2023
928	1978	8	01	801-020		738		

Pos	Part Number	Description	Remark	Qty	Model
9	928 502 341 02	Cross panel	left	1	
(9)	928 502 342 02	Cross panel	right	1	
10	928 501 805 02	battery box D - MJ 1979>> Discontinued part		1	
10	928 501 805 02	battery box D - MJ 1979>>		1	
	08/78-07/82GRV	primed			
11	928 501 075 02	Bottom plate D - MJ 1978>> - MJ 1978 Discontinued part		1	
(11)	928 501 075 03	Bottom plate D - MJ 1979>> Discontinued part		1	
(11)	928 501 075 03	Bottom plate D - MJ 1979>>		1	
	08/78-07/82GRV	primed			
12	928 504 011 03	Cover		1	
13	928 504 103 02	Locking bar		1	
14	900 151 027 02	Washer B 5,3 Discontinued part		1	
14	900 151 027 03	Washer B 5,3		1	
15	N 013 973 4	oval head panel screw BZ 5,5 X 13		1	
16	911 201 259 00	Underlay for Spare wheel		3	

Model	Year	MG	SG	Illustration	Restrictions	UPD	7:19	27.10.2023
928	1978	8	01	801-025		738		

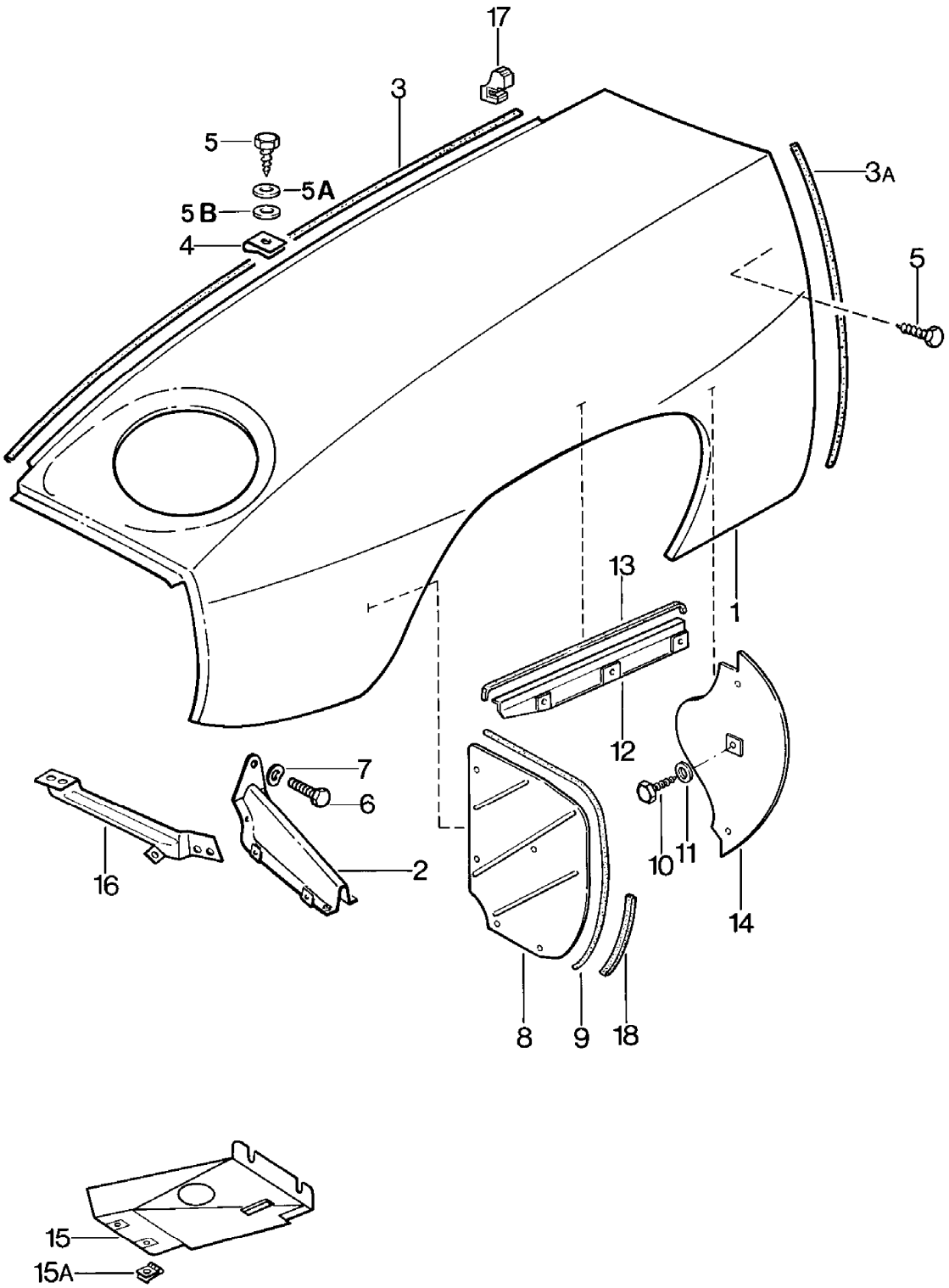

Model	Year	MG	SG	Illustration	Restrictions	UPD	7:19	27.10.2023
928	1978	8	01	801-025		738		

Pos	Part Number	Description	Remark	Qty	Model
		Wing			
1	928 503 901 02	Wing F >> 92-88100 479	left	1	
(1)	928 503 902 02	Wing F >> 92-88100 479	right	1	
(1)	928 503 902 02	Wing	right	1	
	08/77-07/82GRV	primed F >> 92-88100 479			
(1)	928 503 011 02	Wing F 92-88100 480>>	left	1	
(1)	928 503 011 02	Wing	left	1	
	08/77-07/82GRV	primed F 92-88100 480>>			
(1)	928 503 012 02	Wing F 92-88100 480>>	right	1	
(1)	928 503 012 02	Wing	right	1	
	08/77-07/82GRV	primed F 92-88100 480>>			
2	928 503 031 02	bracket - fender		2	928
(2)	928 503 031 03	bracket - fender		2	928S
(2)	928 503 031 03	bracket - fender		2	928S
	08/77-07/82GRV	primed			
3	000 043 129 00	sealing tape		2	
3A	000 043 129 00	sealing tape		*	
4	999 507 003 02	panel nut Discontinued part		26	
4	999 507 003 01	panel nut		26	
5	900 187 010 02	hexagon head panel screw BZ 6,3 X 19 Discontinued part		26	
5	900 187 010 03	hexagon head panel screw BZ 6,3 X 19		26	
5A	900 151 003 02	Washer A 6,4 Discontinued part		26	
5A	900 151 006 03	Washer A 6,4		26	
5B	999 704 157 40	Washer		26	

Model	Year	MG	SG	Illustration	Restrictions	UPD	7:19	27.10.2023
928	1978	8	01	801-025		738		

Pos	Part Number	Description	Remark	Qty	Model
6	900 075 010 02	Hexagon nut M 6 X 12 Discontinued part		10	
6	N 010 212 14	Hexagon bolt M 6 X 12 Discontinued part		10	
6	999 072 005 09	Hexagon nut M 6 X 12 Discontinued part		10	
6	999 072 005 01	Hexagon bolt M 6 X 12		10	
7	N 012 226 5	Spring washer A 6		10	
8	928 504 221 08	Cover	front	2	928
(8)	928 504 221 10	Cover		2	928S
9	928 504 223 02	sealing tape		2	
10	900 075 057 02	Hexagon bolt M 6 X 16		16	
10	900 075 057 03	Hexagon bolt M 6 X 16 No longer use the part here		16	
11	900 151 003 02	Washer A 6,4 Discontinued part		16	
11	900 151 006 03	Washer A 6,4		16	
12	928 504 317 02	Cover	left	1	
(12)	928 504 318 02	Cover	right	1	
13	928 504 211 02	sealing tape		2	
14	928 504 315 02	Cover	left	1	
(14)	928 504 316 03	Cover	right	1	
15	928 504 027 02	Cover Headlight recess	left lower	1	
15	928 504 028 02	Cover Headlight recess	right lower	1	
15A	999 507 246 02	panel nut M 6 Discontinued part		4	
15A	999 507 246 01	panel nut M 6		4	

Model	Year	MG	SG	Illustration	Restrictions	UPD	7:19	27.10.2023
928	1978	8	01	801-025		738		

Pos	Part Number	Description	Remark	Qty	Model
17	928 511 577 02	Seal		2	
18	928 504 228 02	Seal		2	928S:M 471
18	928 504 233 02	Seal Discontinued part		2	928
18	928 504 233 03	Seal		2	928

Model	Year	MG	SG	Illustration	Restrictions	UPD	7:19	27.10.2023
928	1978	8	01	801-030		738		

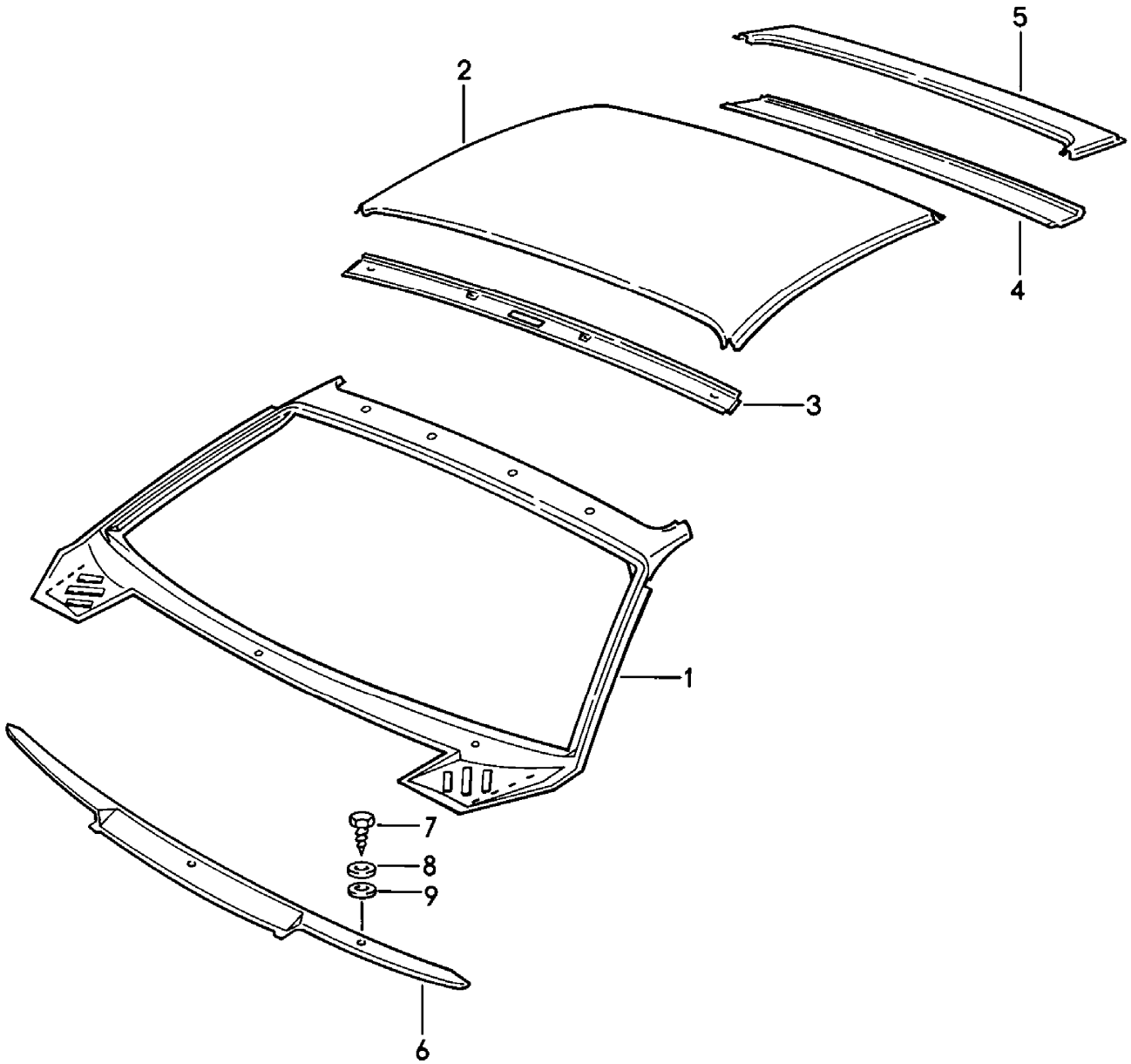

Model	Year	MG	SG	Illustration	Restrictions	UPD	7:19	27.10.2023
928	1978	8	01	801-030		738		

Pos	Part Number	Description	Remark	Qty	Model
		Outer roof panel Scuttle			
1	928 503 041 08	Scuttle	lhd	1	
(1)	927 503 041 02	Scuttle Discontinued part	rhd	1	
(1)	927 503 041 04	Scuttle	rhd	1	
2	928 503 501 02	Roof		1	
3	928 502 383 02	roof frame	front	1	
4	928 502 393 02	roof frame	rear lower	1	
5	928 502 395 02	roof frame	rear upper	1	
6	928 559 117 02	Scuttle	lhd outer	1	
(6)	927 559 117 02	Scuttle	rhd	1	
-	928 559 251 02	Seal Scuttle 1600 MM		1	
7	900 187 010 02	hexagon head panel screw BZ 6,3 X 19 Discontinued part		2	
7	900 187 010 03	hexagon head panel screw BZ 6,3 X 19		2	
8	900 151 003 02	Washer A 6,4 Discontinued part		2	
8	900 151 006 03	Washer A 6,4		2	
9	999 704 157 40	Washer		2	

Model	Year	MG	SG	Illustration	Restrictions	UPD	7:19	27.10.2023
928	1978	8	02	802-000		738		

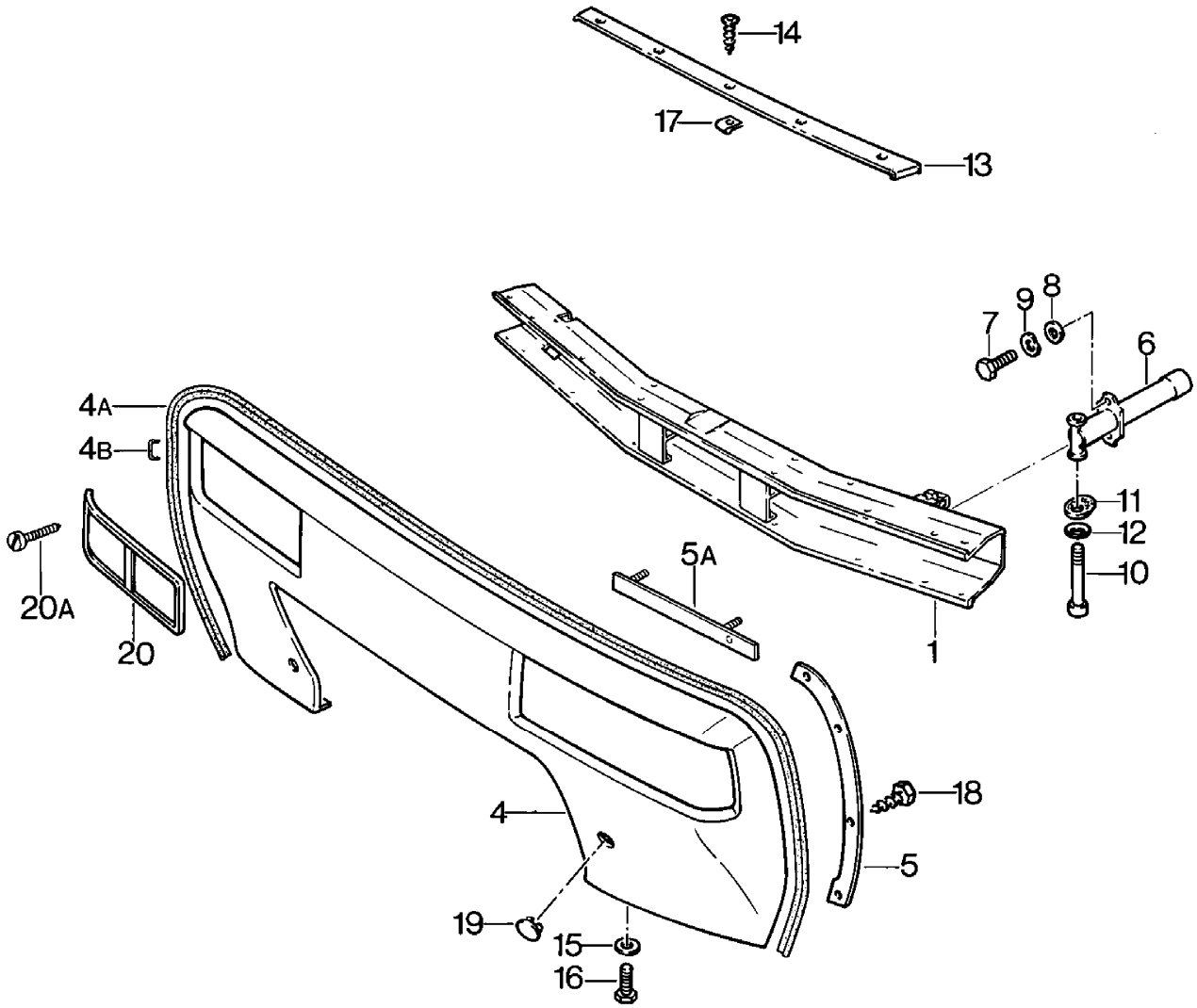

Model	Year	MG	SG	Illustration	Restrictions	UPD	7:19	27.10.2023
928	1978	8	02	802-000		738		

Pos	Part Number	Description	Remark	Qty	Model
		bumper	front		
1	928 505 010 04	Carrier		1	
(1)	928 505 010 03	Carrier D - MJ 1978>> - MJ 1978		1	M 58 "USA","CDN"
(1)	928 505 010 05	Carrier D - MJ 1979>>		1	M 58 "USA","CDN"
4	928 505 113 06	Trim also use:	 PCG70120100	1 1	
-	928 025 289 02	beading		*	
4A		shorten to:	2300 MM	1	
4B	999 591 539 07	Securing clip		X	
5	928 505 033 02	retaining strip	left	1	
5	928 505 033 02	retaining strip	left	1	
	08/77-07/82GRV	primed			
(5)	928 505 034 02	retaining strip	right	1	
(5)	928 505 034 02	retaining strip	right	1	
	08/77-07/82GRV	primed			
5A	928 505 031 02	retaining strip		2	
6	928 505 017 02	Shock absorber		2	
(6)	928 505 015 02	Shock absorber		2	M 58 "USA","CDN"
7	900 075 085 02	Hexagon bolt M 8 X 20		4	
8	900 025 007 02	Washer A 8,4 Discontinued part		4	
8	900 025 007 03	Washer A 8,4		4	
9	N 012 241 8	Spring washer B 8		4	
10	900 067 084 02	Socket head bolt M 12 X 110		2	
10	900 067 084 03	Socket head bolt M 12 X 110		2	

Model	Year	MG	SG	Illustration	Restrictions	UPD	7:19	27.10.2023
928	1978	8	02	802-000		738		

Pos	Part Number	Description	Remark	Qty	Model
11	999 025 212 09	Washer 12 Discontinued part		2	
11	999 025 212 01	Washer 12		2	
(11)	928 505 243 02	eccentric washer		2	M 58 "USA","CDN"
12	900 222 003 01	Belleville spring		2	
13	928 505 114 02	Cover trim		1	
14	N 014 098 6	oval hd. csk. self-tapp. screw B 4,8 X 16		5	
15	900 151 003 02	Washer A 6,4 Discontinued part		2	
15	900 151 006 03	Washer A 6,4		2	
16	900 075 057 02	Hexagon bolt M 6 X 16		2	
16	900 075 057 03	Hexagon bolt M 6 X 16 No longer use the part here		2	
17	999 507 025 02	panel nut		13	
18	900 187 106 02	panel screw B 4,8 X 13		8	
19	928 505 131 02	End cap		2	
20	928 505 117 04	Cover frame	left	1	
20	928 505 118 04	Cover frame	right	1	
20A	900 143 125 07	oval head panel screw B 3,5 X 13		1	

Model	Year	MG	SG	Illustration	Restrictions	UPD	7:19	27.10.2023
928	1978	8	02	802-005		738		

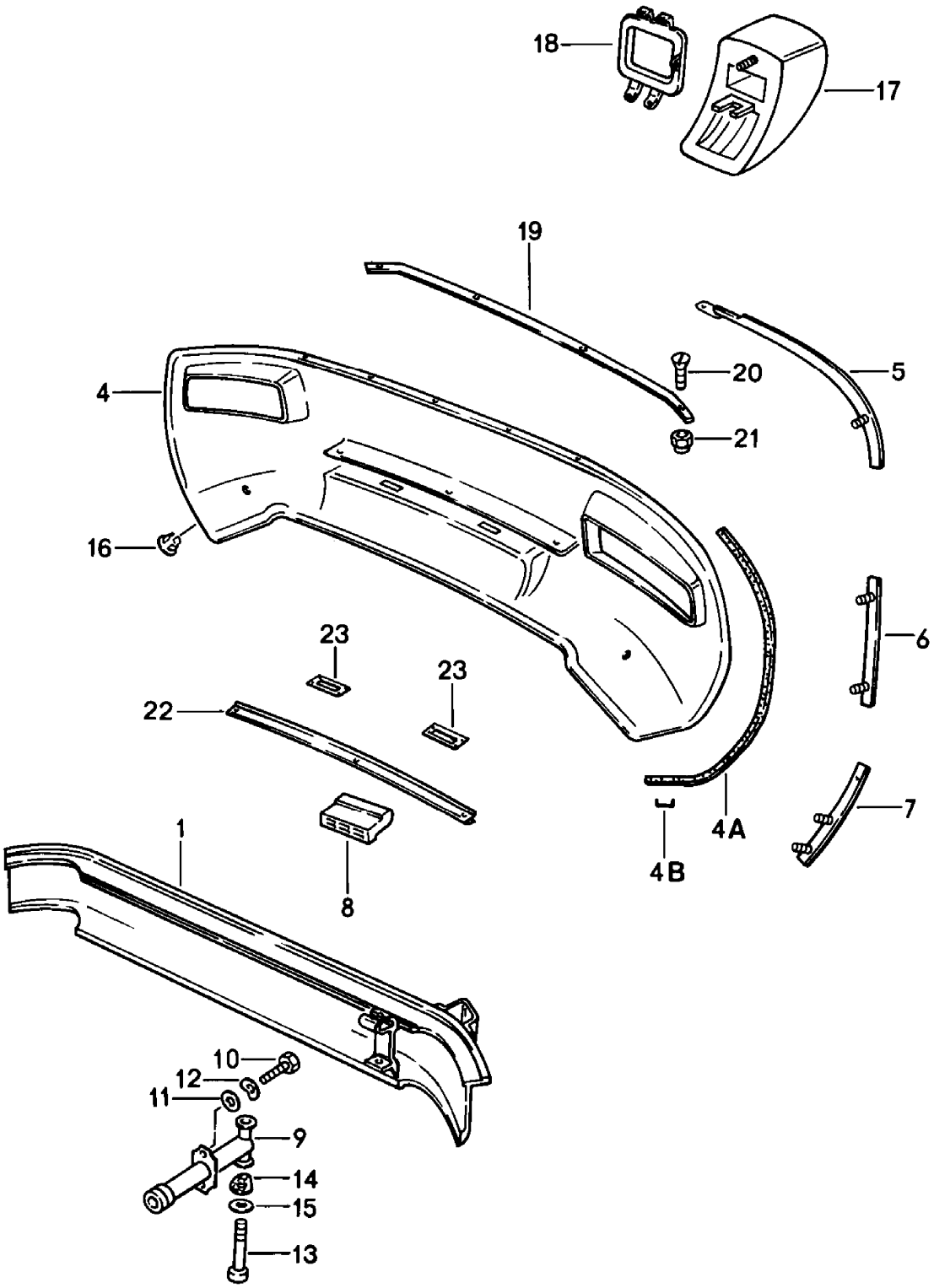

Model	Year	MG	SG	Illustration	Restrictions	UPD	7:19	27.10.2023
928	1978	8	02	802-005		738		

Pos	Part Number	Description	Remark	Qty	Model
		bumper	rear		
1	928 505 020 07	Carrier D - MJ 1978>> - MJ 1978 Discontinued part		1	
1	928 505 020 07	Carrier		1	
(1)	928 505 020 07	Carrier D - MJ 1979>> Discontinued part		1	
4	928 505 123 03	Trim for vehicles without rear fog light		1	
-	928 025 289 02	beading		*	
4A		shorten to:	1000 MM	2	
4B	999 591 539 07	Securing clip		X	
5	928 505 035 02	retaining strip	left upper	1	
(5)	928 505 036 02	retaining strip	right upper	1	
6	928 505 037 02	retaining strip	left center	1	
(6)	928 505 038 02	retaining strip	right center	1	
7	928 505 039 02	retaining strip	left lower	1	
(7)	928 505 040 02	retaining strip	right lower	1	
-	999 190 313 02	Button-head rivet 3,2		6	
-	999 190 114 30	Pop rivet 3,2		4	
8	928 505 245 02	overrider - bumper		2	
-	999 591 450 40	Button-head rivet 4,8		3	
-	999 190 312 30	Button-head rivet 4,8		3	
(9)	928 505 017 02	Shock absorber		2	
9	928 505 015 02	Shock absorber		2	M 58 "USA","CDN"
10	900 075 085 02	Hexagon bolt M 8 X 20		4	

Model	Year	MG	SG	Illustration	Restrictions	UPD	7:19	27.10.2023
928	1978	8	02	802-005		738		

Pos	Part Number	Description	Remark	Qty	Model
11	900 025 007 02	Washer A 8,4 Discontinued part		4	
11	900 025 007 03	Washer A 8,4		4	
12	N 012 241 8	Spring washer B 8		4	
13	900 067 084 02	Socket head bolt M 12 X 110		2	
13	900 067 084 03	Socket head bolt M 12 X 110		2	
14	999 025 212 09	Washer 12 Discontinued part		2	
14	999 025 212 01	Washer 12		2	
(14)	928 505 243 02	eccentric washer		2	N 58 "USA","CDN"
-	900 143 046 02	oval head panel screw B 4,8 X 16 Discontinued part		5	
-	900 143 046 01	oval head panel screw B 4,8 X 16		5	
15	900 222 003 01	Belleville spring		2	
-	N 011 556 2	Washer		5	
16	928 505 131 02	End cap for Trim		2	
18	928 505 285 02	Frame Rear fog light	left	1	
19	928 505 267 02	Cover trim		1	
20	900 269 050 07	countersunk bolt M 5 X 25		11	
21	900 910 009 02	Locknut M 5		11	
21	900 084 026 01	Locknut M 5		11	
22	928 505 253 02	Reinforcement		1	
23	928 505 112 02	Securing plate		2	

Model	Year	MG	SG	Illustration	Restrictions	UPD	7:20	27.10.2023
928	1978	8	02	802-010		738		

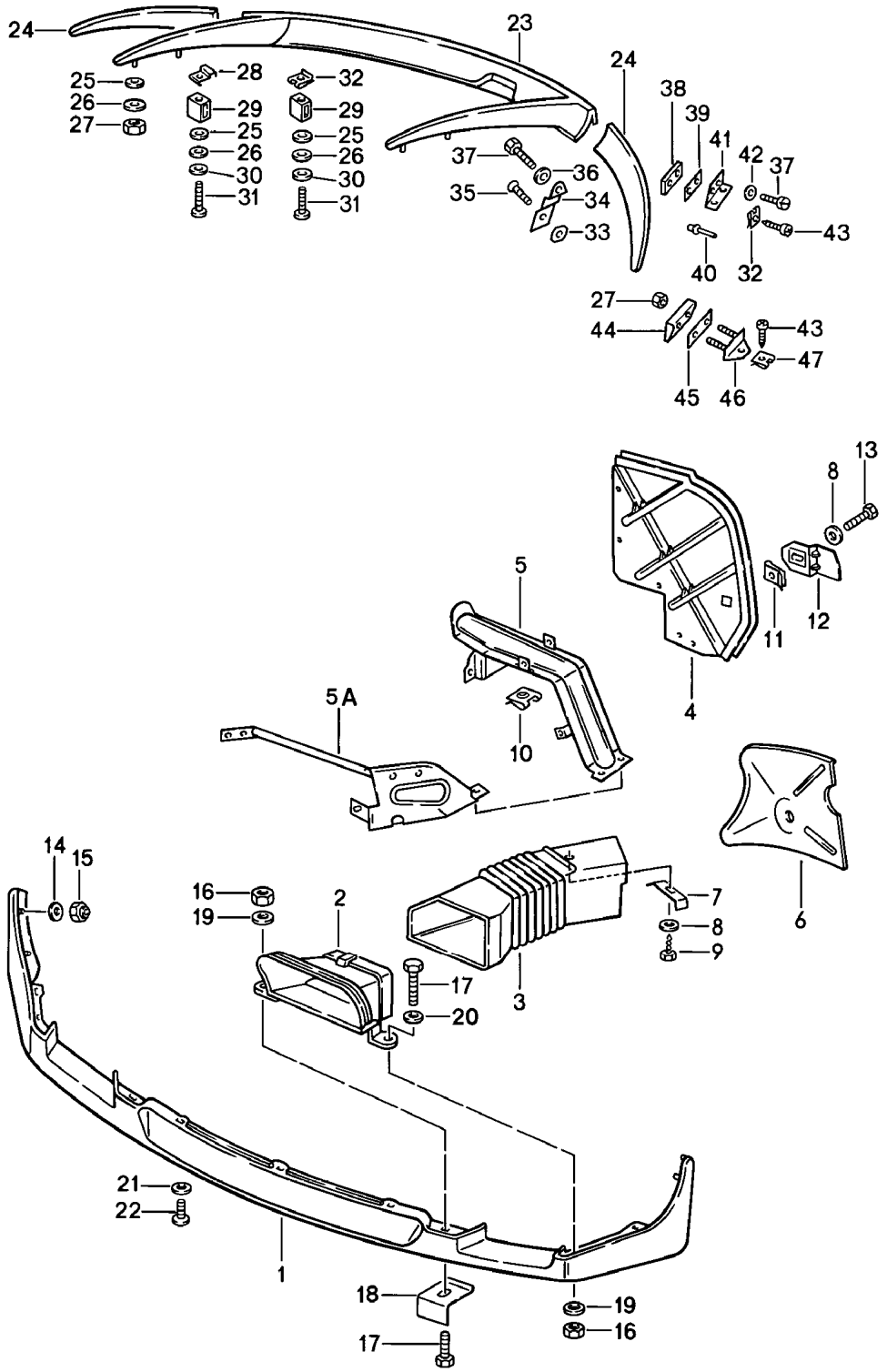

Model	Year	MG	SG	Illustration	Restrictions	UPD	7:20	27.10.2023
928	1978	8	02	802-010		738		

Pos	Part Number	Description	Remark	Qty	Model
		Spoiler	front and rear		
1	928 505 071 03	Front spoiler		1	
2	928 505 159 02	Ventilation grille	left	1	
(2)	928 505 160 02	Ventilation grille	right	1	
3	928 504 159 02	Vent hose	left	1	
(3)	928 504 160 02	Vent hose	right	1	
4	928 504 221 10	Cover Wheel housing	front	2	
5	928 503 031 03	bracket - fender		2	
	08/77-07/82GRV	primed			
6		see illustration, item:	401-000,17		
7	928 504 247 02	Bracket		2	
8	900 151 003 02	Washer B 6 Discontinued part		16	
8	900 151 006 03	Washer B 6		16	
9	900 187 108 02	panel screw B 6,3 X 16 Discontinued part		12	
9	900 187 108 01	panel screw B 6,3 X 16		12	
10	999 591 486 02	panel nut B 6,3		2	
11	999 507 246 02	panel nut M 6 Discontinued part		2	
11	999 507 246 01	panel nut M 6		2	
12	928 504 219 02	Bracket		1	
12	928 504 220 02	Bracket		1	
13	900 075 057 02	Hexagon bolt M 6 X 16		2	
13	900 075 057 03	Hexagon bolt M 6 X 16 No longer use the part here		2	
14	900 151 027 02	Washer B 5,3 Discontinued part		6	

Model	Year	MG	SG	Illustration	Restrictions	UPD	7:20	27.10.2023
928	1978	8	02	802-010		738		

Pos	Part Number	Description	Remark	Qty	Model
14	900 151 027 03	Washer B 5,3		6	
15	900 910 008 02	Locknut M 5		6	
16	900 910 011 02	Locknut M 6		4	
17	900 075 017 02	Hexagon bolt M 6 X 25 Discontinued part		6	
17	900 075 017 03	Hexagon bolt M 6 X 25		6	
18	928 505 373 02	Bracket		6	
19	N 011 612 3	Washer R 6,6 Discontinued part		6	
19	N 011 612 C	Washer R 6,6		6	
20	900 151 003 02	Washer B 6 Discontinued part		2	
20	900 151 006 03	Washer B 6		2	
21	900 151 027 02	Washer B 5,3 Discontinued part		3	
21	900 151 027 03	Washer B 5,3		3	
22	999 141 001 02	Round-head screw M 5 X 12 Discontinued part		3	
22	999 141 001 0B	Round-head screw M 5 X 12		3	
23	928 512 071 02	Rear spoiler		1	
24	928 512 073 02	Rear spoiler	left	1	
24	928 512 074 02	Rear spoiler	right	1	
25	928 559 143 02	seal ring Discontinued part		10	
25	928 559 143 03	seal ring		10	
26	999 025 083 70	Washer 3,7 X 11 X 0,5		10	

Model	Year	MG	SG	Illustration	Restrictions	UPD	7:20	27.10.2023
928	1978	8	02	802-010		738		

Pos	Part Number	Description	Remark	Qty	Model
27	900 910 006 02	Locknut M 4 Discontinued part		4	
27	900 084 020 01	Locknut M 4		4	
28	928 512 307 02	press insert nut		6	
29	928 512 199 02	Distance piece		12	
30	900 025 002 02	Washer A 4,3 Discontinued part		12	
30	900 025 002 03	Washer A 4,3		12	
31	900 143 077 02	panel screw B 4,2 X 32		12	
32	N 015 429 2	Speed nut 4,2 Discontinued part		6	
32	N 015 429 6	Speed nut 4,2		6	
33	928 512 611 02	Underlay		2	
34	928 512 589 02	Retaining bracket		2	
35	999 219 003 07	countersunk bolt M 6 X 16		2	
36	900 151 037 07	Washer A 6,4		2	
37	999 217 006 07	Hexagon bolt M 6 X 10		4	
38	928 512 601 02	Threaded plate		2	
39	928 512 613 02	Underlay		2	
40	999 190 151 30	full tubular rivet 4 X 8		2	
41	928 512 595 02	angle		2	
42	N 011 524 7	Washer A 6,4 Discontinued part		2	
42	N 011 524 27	Washer A 6,4		2	
43	N 013 965 9	oval head panel screw 4,2 X 9,5		4	
44	928 512 609 02	Wedge		2	

Model	Year	MG	SG	Illustration	Restrictions	UPD	7:20	27.10.2023
928	1978	8	02	802-010		738		

Pos	Part Number	Description	Remark	Qty	Model
45	**928 512 615 02**	**Underlay**		**2**	
46	**928 512 605 02**	**angle**		**2**	
47	**999 507 229 02**	**panel nut B 4,2**		**2**	

Model	Year	MG	SG	Illustration	Restrictions	UPD	7:20	27.10.2023
928	1978	8	03	803-000		738		

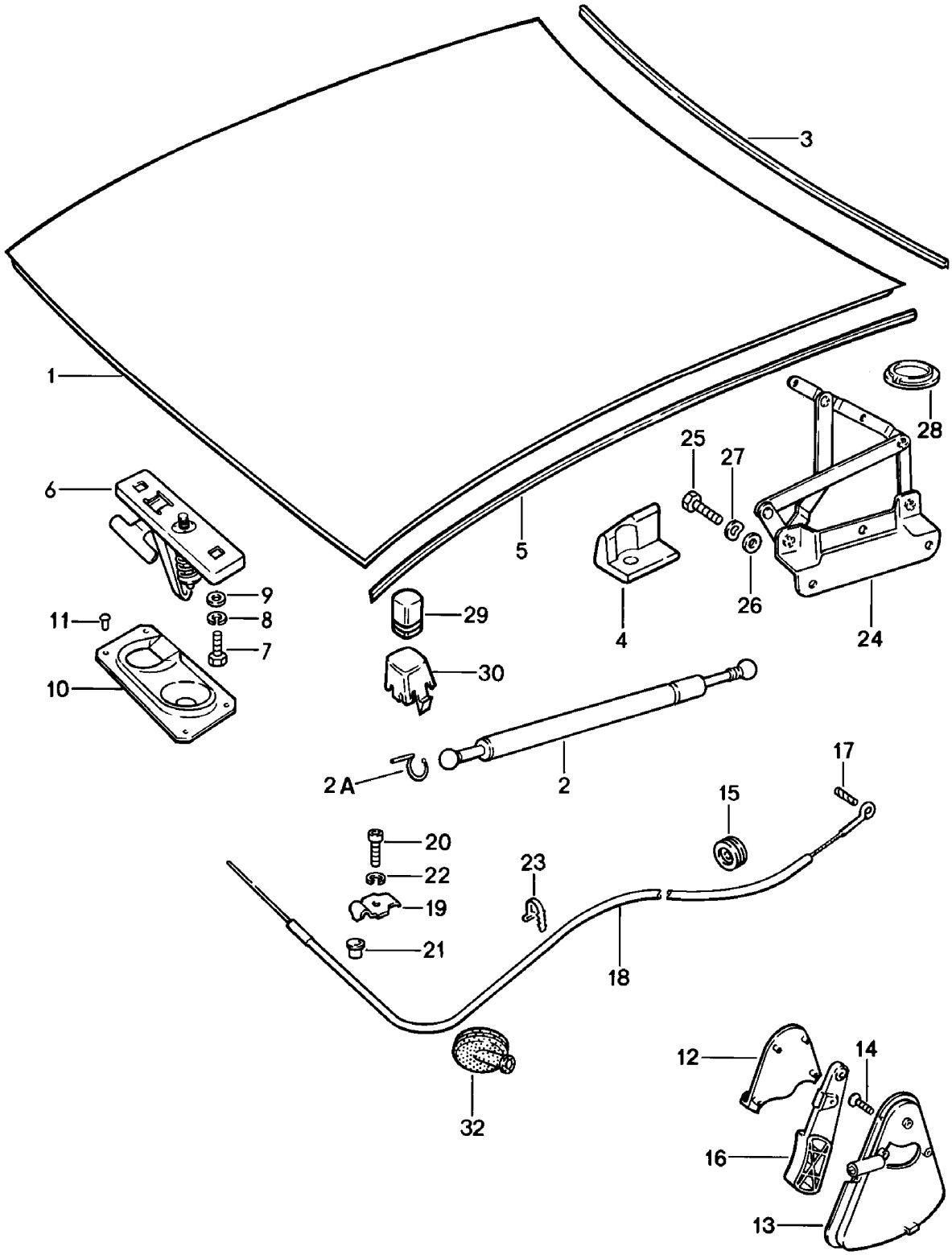

Model	Year	MG	SG	Illustration	Restrictions	UPD	7:20	27.10.2023
928	1978	8	03	803-000		738		

Pos	Part Number	Description	Remark	Qty	Model
		Cover	front		
1	928 511 005 03	engine compartment lid		1	
2	928 511 139 03	Gas filled strut		2	
2A	900 169 016 02	Securing bars		4	
3	928 511 141 03	Seal D >> - MJ 1979		1	
(3)	928 511 141 03	Seal D - MJ 1980>>		1	
(5)	928 511 551 03	Seal Discontinued part	side	2	
(5)	928 511 551 05	Seal	side	2	
6	928 511 029 02	Lid lock Upper part Discontinued part		1	
6	928 511 029 03	Lid lock Upper part Discontinued part		1	
6	944 511 029 00	Lock upper part Upper part		1	
7	900 076 010 02	Nut M 6 Discontinued part		2	
7	900 076 010 0B	Nut M 6		2	
7	900 076 010 03	Nut M 6		2	
8	N 012 007 2	spring ring A 6 Discontinued part		2	
8	900 027 004 03	spring ring A 6		2	
9	N 011 666 7	Washer B 6,4		2	
10	928 511 027 02	Lid lock Lower part		1	
11	999 190 128 30	Pop rivet 4,8 X 2		4	
12	928 511 143 02	Cover		1	
	08/77-07/8270B	Black			
13	928 511 173 02	bearing shell		1	

Model	Year	MG	SG	Illustration	Restrictions	UPD	7:20	27.10.2023
928	1978	8	03	803-000		738		

Pos	Part Number	Description	Remark	Qty	Model
	08/77-07/8270B	Black			
14	900 249 001 02	countersunk bolt Discontinued part		2	
14	900 249 031 01	countersunk bolt M 6 X 15		2	
15	477 823 591	Grommet D - MJ 1978>> - MJ 1978		1	
16	928 511 175 02	handle		1	
	08/77-07/8270B	Black			
17	900 308 027 02	spring pin 3,5 X 10 D >> - MJ 1980		1	
17	900 197 018 00	spring pin 4 X 12 D - MJ 1981>>		1	
18	928 511 037 04	Wire pull	lhd	1	
18	927 504 037 00	Wire pull	rhd	1	
19	928 511 541 02	clamping piece		1	
20	900 067 008 02	Socket head bolt M 6 X 12 Discontinued part		1	
20	900 067 008 03	Socket head bolt M 6 X 12		1	
21	928 511 543 02	Sleeve		1	
22	N 012 007 2	spring ring A 6 Discontinued part		1	
22	900 027 004 03	spring ring A 6		1	
23	999 513 007 40	Cable ties		3	
24	928 511 041 04	Bonnet hinge	left	1	
(24)	928 511 042 04	Bonnet hinge	right	1	
25	N 010 237 6	Hexagon bolt M 8 Discontinued part		10	
25	N 010 237 14	Hexagon bolt M 8		10	
26	900 025 007 02	Washer A 8,4 Discontinued part		10	

Model	Year	MG	SG	Illustration	Restrictions	UPD	7:20	27.10.2023
928	1978	8	03	803-000		738		

Pos	Part Number	Description	Remark	Qty	Model
26	900 025 007 03	Washer A 8,4		10	
27	N 012 241 8	Spring washer A 8		10	
28	928 511 321 02	Cover cap		2	
29	999 703 132 40	Rubber buffer VERSTELLBAR		1	
30	928 511 203 02	Mounting block		2	
32	111 957 861	Rubber grommet		1	

Model	Year	MG	SG	Illustration	Restrictions	UPD	7:20	27.10.2023
928	1978	8	03	803-005		738		

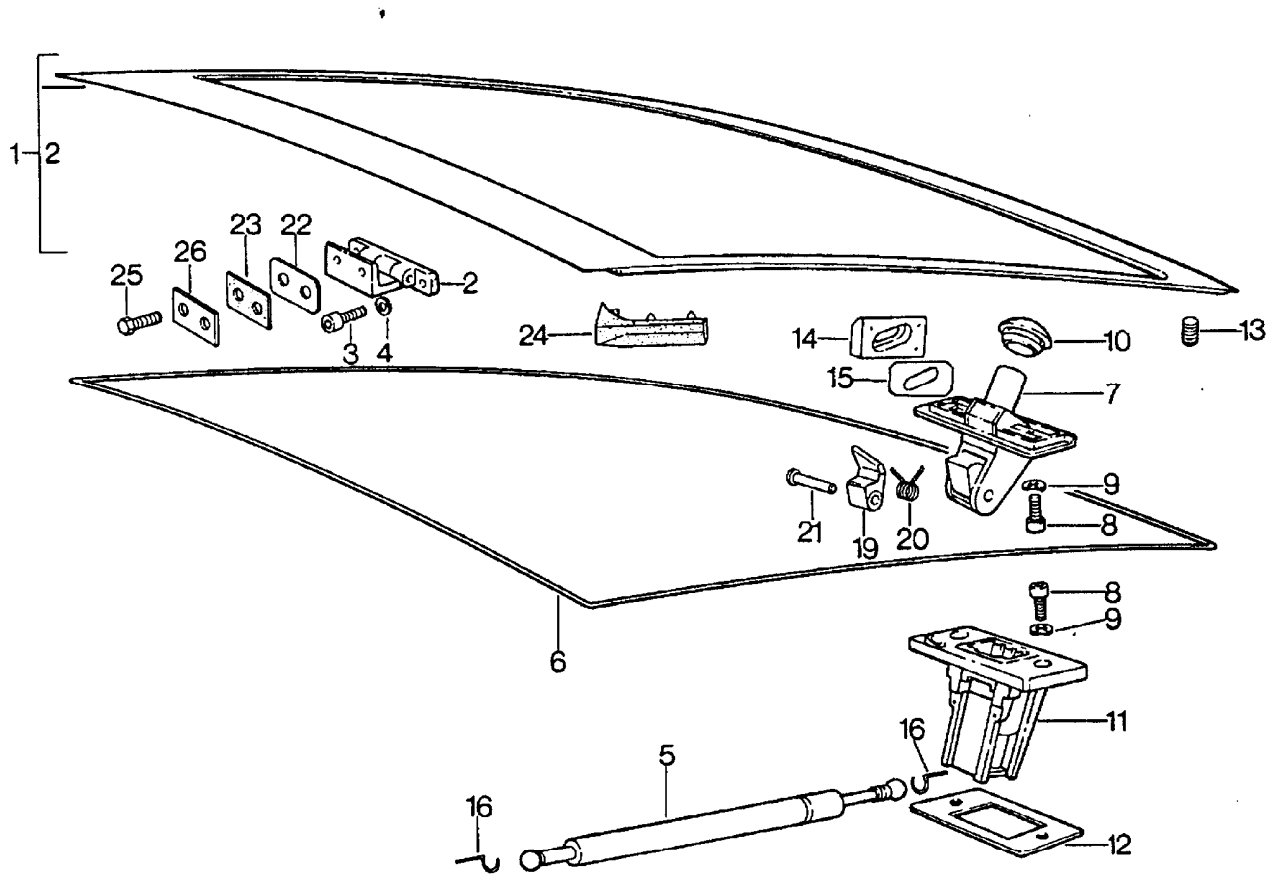

Model	Year	MG	SG	Illustration	Restrictions	UPD	7:20	27.10.2023
928	1978	8	03	803-005		738		

Pos	Part Number	Description	Remark	Qty	Model
		Cover	rear		
-		note: alarm system See main group 8 8/04/20			
1	928 512 005 03	Cover		1	
(1)	928 512 005 02	Rear lid without: Rear window wiper D - MJ 1980>> - MJ 1980		1	928
2	928 512 041 04	Rear lid hinge		2	
3	999 509 012 02	Socket head bolt M 6 X 20		8	
4	N 012 026 3	spring ring A 6		8	
5	928 512 331 05	Gas filled strut		2	
6	928 512 129 02	Seal Discontinued part		1	
6	928 512 129 05	Seal also use:		1	
-	000 043 204 38	sealant		1	
7	928 512 903 02	Lid lock with: valet key W/o stipulated lock number		1	
(7)	928 512 901 02	Lid lock with: valet key When ordering, please provide the vehicle identification and the lock number		1	
8	900 186 149 02	Socket head bolt M 8 X 15		4	
9	999 523 102 02	Toothed washer Discontinued part		4	
9	999 523 102 0B	Toothed washer		4	
10	928 512 169 02	Seal		1	
11	928 512 055 40	lock Lower part		1	928
11	928 512 055 40	lock Lower part		1	928S PR:473

Model	Year	MG	SG	Illustration	Restrictions	UPD	7:20	27.10.2023
928	1978	8	03	803-005		738		

Pos	Part Number	Description	Remark	Qty	Model
12	928 512 179 02	Underlay 1 MM		X	
(12)	928 512 181 02	Underlay 2 MM		X	
13	999 703 132 40	Rubber buffer		2	
14	928 512 057 02	Guide wedge		2	
15	928 512 263 02	Spacer		2	
16	900 169 016 02	Securing bars		4	
19	928 512 161 02	Locking bar		1	
20	928 512 163 02	Spring		1	
21	928 512 165 02	clinch pin		1	
22	928 512 409 02	Underlay		X	
23	928 512 413 03	Seal D >> - MJ 1980 Discontinued part		2	
23	928 512 413 03	Seal D - MJ 1981>> - MJ 1981		2	
23	928 512 413 07	Seal D - MJ 1982>> - MJ 1982		2	
24	928 512 261 02	Water deflector	left	1	
(24)	928 512 262 02	Water deflector	right	1	
25	999 217 017 02	Hexagon bolt M 8 X 18		4	
26	928 512 417 03	Spacer		2	

Model	Year	MG	SG	Illustration	Restrictions	UPD	7:21	27.10.2023
928	1978	8	04	804-000		738		

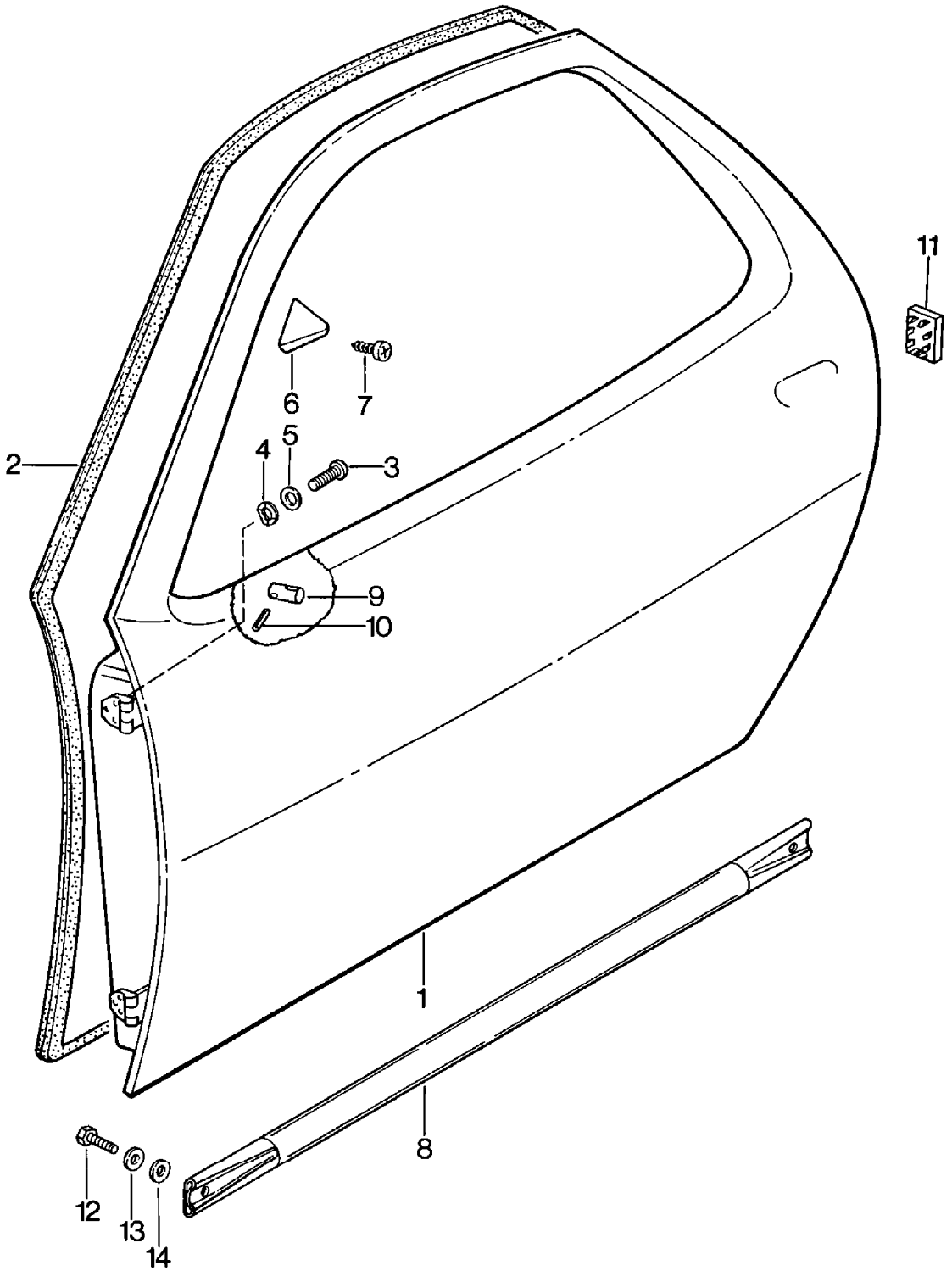

Model	Year	MG	SG	Illustration	Restrictions	UPD	7:21	27.10.2023
928	1978	8	04	804-000		738		

Pos	Part Number	Description	Remark	Qty	Model
		Door shell			
1	928 531 005 07	Door shell with: Mirror mounting	left	1	
(1)	928 531 006 07	Door shell without: Mirror mounting	right	1	
1	927 531 005 08	Door shell without: Mirror mounting	left	1	
(1)	927 531 006 10	Door shell with: Mirror mounting	right	1	
2	928 537 345 03	Door seal	left	1	
(2)	928 537 346 03	Door seal	right	1	
3	N 014 770 3	Socket head bolt M 8 X 15		12	
4	900 025 007 02	Washer A 8,4 Discontinued part		16	
4	900 025 007 03	Washer A 8,4		16	
5	900 027 015 02	spring ring B 8		16	
5	900 027 015 03	spring ring B 8		16	
6	928 537 341 02	wedge	left	1	
(6)	928 537 342 02	wedge	right	1	
7	900 144 008 02	countersunk panel screw B 3,5 X 9,5		2	
8	928 531 601 03	crash member		2	PR:190
8	928 531 601 03	crash member		2	PR:190
	08/77-07/82GRV	primed			
9	928 531 235 03	threaded pin		1	
10	N 013 295 1	Spring pin 3 X 12		1	
11	928 537 723 02	Dummy plugs D - MJ 1980>>		2	

Model	Year	MG	SG	Illustration	Restrictions	UPD	7:21	27.10.2023
928	1978	8	04	804-000		738		

Pos	Part Number	Description	Remark	Qty	Model
12	N 010 239 11	Hexagon bolt M 8 X 18 Discontinued part		4	
12	N 010 239 30	Hexagon bolt M 8 X 18		4	
13	N 012 009 3	spring ring A 8		4	
14	900 025 007 02	Washer A 8,4 Discontinued part		4	
14	900 025 007 03	Washer A 8,4		4	

Model	Year	MG	SG	Illustration	Restrictions	UPD	7:21	27.10.2023
928	1978	8	04	804-005		738		

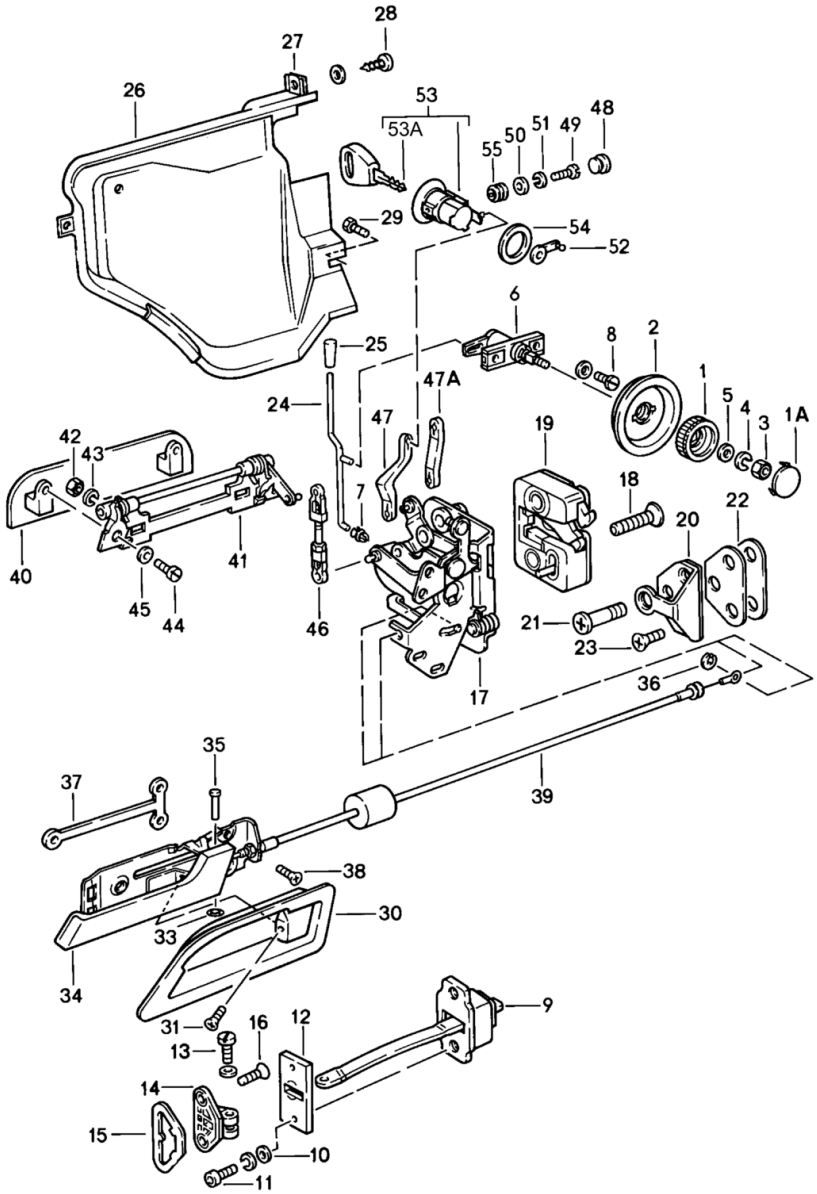

Model	Year	MG	SG	Illustration	Restrictions	UPD	7:21	27.10.2023
928	1978	8	04	804-005		738		

Pos	Part Number	Description	Remark	Qty	Model
		Individual parts Door			
-		note: alarm system see illustration:	804-020		
1	928 537 581 03	Rot. knob		2	
1A	911 531 703 00	Cover cap		2	
2	928 537 585 02	Cover		2	
3	N 011 005 14	Hexagon nut M 5 Discontinued part		2	
3	900 076 091 01	Hexagon nut M 5		2	
4	N 012 222 4	Spring washer A 5		2	
5	900 151 027 02	Washer B 5,3 Discontinued part		2	
5	900 151 027 03	Washer B 5,3		2	
(6)	928 537 095 02	Rot. knob for Rot. knob Driver's door		1	
6	928 537 096 02	Mounting		1	
	08/77-07/82TPP	Mounting Rot. knob Passenger's door			
7	993 531 563 00	Clip		2	
8	900 143 058 02	panel screw BZ 4,5 X 9,5		4	
9	928 537 033 04	Door catch		2	
10	N 011 524 7	Washer 6,4 Discontinued part		4	
10	N 011 524 27	Washer 6,4		4	
11	928 537 451 02	Socket head bolt		4	
12	928 537 371 02	Door catch Bracket		2	

Model	Year	MG	SG	Illustration	Restrictions	UPD	7:21	27.10.2023
928	1978	8	04	804-005		738		

Pos	Part Number	Description	Remark	Qty	Model
(13)	900 309 031 02	spring pin 6 X 16 D >> - MJ 1979		2	
13	928 537 419 03	Socket head bolt		2	
(14)	928 537 417 02	Bracket Discontinued part	left	1	
(14)	928 537 417 03	Bracket	left	1	
14	928 537 418 02	Bracket	right	1	
(15)	928 537 425 02	Underlay	left	1	
15	928 537 426 02	Underlay	right	1	
16	928 537 459 02	fillister hd. bolt M 6 X 25 Discontinued part		4	
16	928 537 459 03	fillister hd. bolt M 6 X 25		4	
(17)	928 537 907 03	lock	left inner	1	
17	927 537 908 03	lock	right inner	1	
18	928 537 721 02	fillister hd. bolt		4	
(19)	928 537 153 03	Door lock	left outer	1	
19	928 537 154 03	Door lock	right outer	1	
20	928 537 038 02	Lock striker D >> - MJ 1979		2	
20	928 537 133 02	Lock striker		2	
21	928 537 131 03	Cotter pin		2	
22	928 537 135 04	Underlay		2	
23	900 249 024 00	countersunk bolt M 8X25		4	
(24)	928 537 160 04	locking rod		2	
25	928 555 359 02	securing knob		2	
25	928 555 359 02	securing knob doors		2	
	08/77-07/8270B	Black			
(26)	928 537 333 02	cover - lock D >> - MJ 1980	left	1	

Model	Year	MG	SG	Illustration	Restrictions	UPD	7:21	27.10.2023
928	1978	8	04	804-005		738		

Pos	Part Number	Description	Remark	Qty	Model
(26)	928 537 333 03	cover - lock D - MJ 1981>>	left	1	
26	928 537 334 02	cover - lock D >> - MJ 1980	right	1	
26	928 537 334 03	cover - lock D - MJ 1981>>	right	1	
27	999 507 033 02	panel nut B 4,8 Discontinued part		4	
27	999 507 033 01	panel nut B 4,8		4	
28	900 143 118 02	panel screw B 4,8 X 13		4	
29	900 075 078 02	Hexagon bolt M 8 X 15 Discontinued part		2	
29	900 075 078 03	Hexagon bolt M 8 X 15		2	
(30)	928 537 545 02	Handle shell	left	1	
30	928 537 546 02	Handle shell	right	1	
31	900 269 006 07	countersunk bolt M 4 X 8		2	
33	999 591 242 01	speed nut		2	
(34)	928 537 547 02	door handle, inner	left	1	
34	928 537 548 02	door handle, inner	right	1	
35	928 537 557 02	Pin		2	
36	900 116 002 01	Retaining washer 3,2		2	
37	928 537 157 02	Speed nut		2	
38	900 269 015 02	countersunk bolt M 5 X 10		6	
39	928 537 055 02	Bowden cable		2	
40	928 537 661 02	handle plate		2	
(41)	928 537 063 04	Mounting D >> - MJ 1980 Discontinued part	left	1	
(41)	928 537 063 04	Mounting D - MJ 1981>> Discontinued part	left	1	

Model	Year	MG	SG	Illustration	Restrictions	UPD	7:21	27.10.2023
928	1978	8	04	804-005		738		

Pos	Part Number	Description	Remark	Qty	Model
(41)	928 537 063 04	Mounting		1	
(41)	928 537 064 04	Mounting D >> - MJ 1980 Discontinued part	right	1	
(41)	928 537 064 04	Mounting D - MJ 1981>> Discontinued part	right	1	
(41)	928 537 064 04	Mounting		1	
42	900 076 010 02	Nut M 6 Discontinued part		4	
42	900 076 010 0B	Nut M 6		4	
42	900 076 010 03	Nut M 6		4	
43	N 012 006 4	spring ring B 6		4	
44	N 014 761 2	Socket head bolt with hexagon socket head M 6 X 12 Discontinued part		4	
44	900 119 129 01	Socket head bolt M 6 X 12		4	
45	N 012 226 5	Spring washer B 6		4	
46	928 537 140 02	connecting rod D >> - MJ 1980		2	
46	928 537 140 03	connecting rod D - MJ 1981>>		1	
(47)	928 537 111 02	operating rod D - MJ 1978>> - MJ 1978		1	
47	928 537 112 02	operating rod D - MJ 1978>> - MJ 1978		1	
47A	928 537 111 03	operating rod D >> - MJ 1980		2	
47A	928 537 111 04	operating rod D - MJ 1981>>		2	
48	999 703 224 40	Cap		2	
49	900 119 035 02	Socket head bolt M 6 X 8 D >> - MJ 1980		2	

Model	Year	MG	SG	Illustration	Restrictions	UPD	7:21	27.10.2023
928	1978	8	04	804-005		738		

Pos	Part Number	Description	Remark	Qty	Model
49	999 218 003 02	Socket head bolt M 6 X 18 D - MJ 1981>>		2	
50	N 011 524 7	Washer B 6,4 Discontinued part		2	
50	N 011 524 27	Washer B 6,4		2	
51	N 012 226 5	Spring washer A 6 D >> - MJ 1980		2	
52	928 537 117 03	Follower	left	1	
52	928 537 118 03	Follower	right	1	
(53)	928 537 633 05	Lock cylinders Rosette Black (No keys) When ordering, please provide the vehicle identification and the lock number D - MJ 1979>>		2	
(53)	928 537 633 06	Lock cylinders Rosette chromed (No keys) When ordering, please provide the vehicle identification and the lock number also use: D - MJ 1978>> - MJ 1978	 928 537 111 03	2 1	
53	928 537 903 02	Lock cylinders Rosette Black valet key W/o stipulated lock number D - MJ 1979>>		2	
53	928 537 903 03	Lock cylinders D - MJ 1978>> - MJ 1978 Discontinued part		2	
53	928 537 903 04	Lock cylinders Rosette chromed valet key		2 1	
-		W/o stipulated lock number also use:	 928 537 111 03	 1	

Model	Year	MG	SG	Illustration	Restrictions	UPD	7:21	27.10.2023
928	1978	8	04	804-005		738		

Pos	Part Number	Description	Remark	Qty	Model
53A	928 537 017 02	main key with: Key lamp When ordering, please provide the vehicle identification and the lock number		2	
-	928 537 624 02	Cover		2	
-	928 537 625 02	contact plate		2	
-	928 537 626 02	Contact element		2	
-	928 537 627 02	Conical spring		2	
-	928 537 628 02	knob		2	
-	928 537 630 02	bulb		2	
53	928 537 639 10	Blank key (uncut)		2	
54	928 537 531 02	Underlay Lock cylinders		2	
55	928 537 573 02	spacer sleeve D - MJ 1981>>		2	

Model	Year	MG	SG	Illustration	Restrictions	UPD	7:21	27.10.2023
928	1978	8	04	804-010		738		

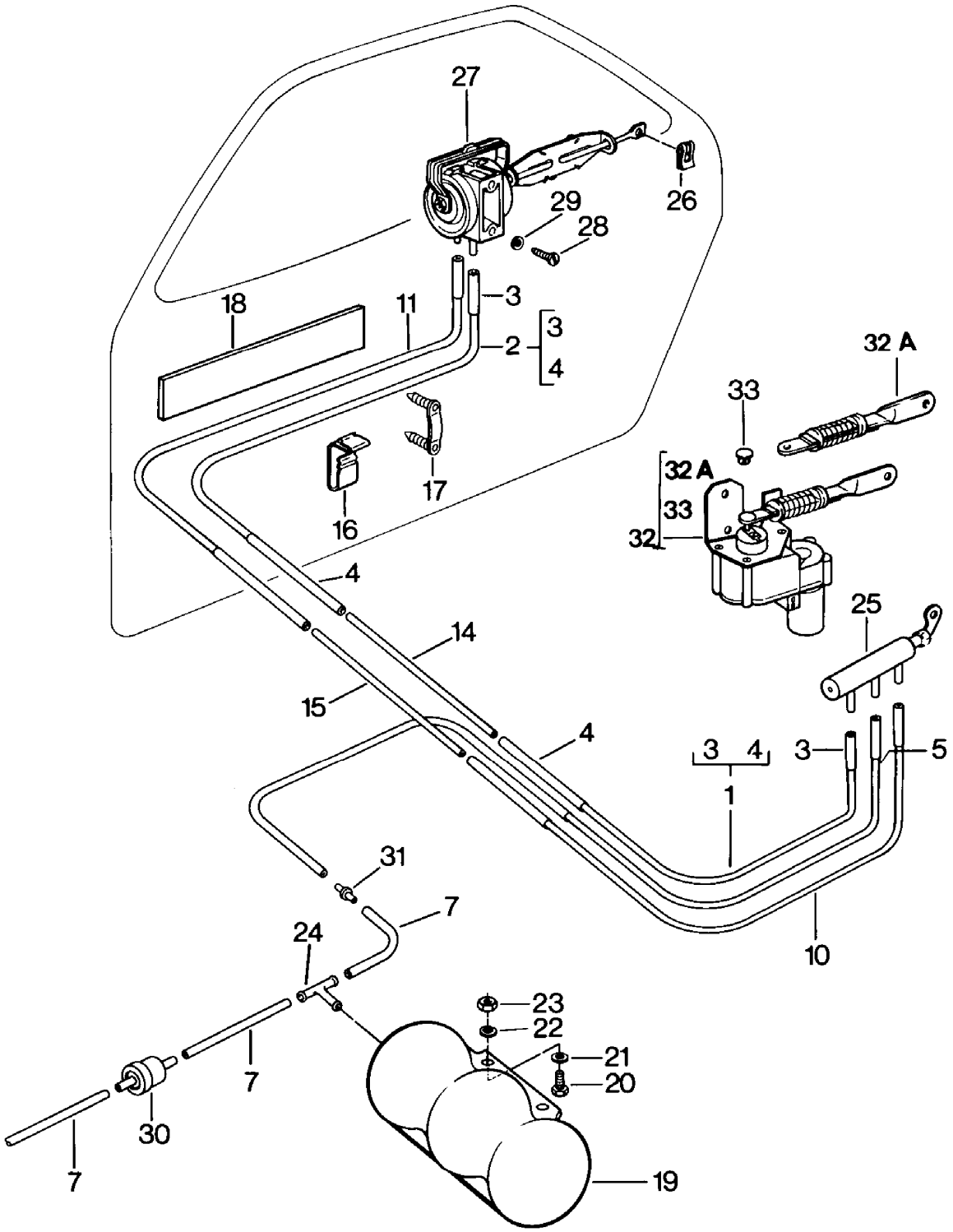

Model	Year	MG	SG	Illustration	Restrictions	UPD	7:21	27.10.2023
928	1978	8	04	804-010		738		

Pos	Part Number	Description	Remark	Qty	Model
		central locking system			
1	928 537 471 02	Vacuum line red D >> - MJ 1979	left	1	
2	928 537 472 02	Vacuum line red D >> - MJ 1979	right	1	
-	928 025 305 03	Hose 2,6 X 1,7 red D >> - MJ 1979		*	
3		shorten to: D >> - MJ 1979	40 MM	2	
4		shorten to: D >> - MJ 1979	350 MM	2	
5	928 537 473 02	Vacuum line blue D >> - MJ 1979		1	
7	928 574 723 02	Vacuum line Black 400 MM D >> - MJ 1979		3	
10	928 537 475 02	Vacuum line light green D >> - MJ 1979		1	
11	928 537 476 02	Vacuum line light green D >> - MJ 1979		1	
14	928 537 447 02	Vacuum line red D >> - MJ 1979		1	
15	928 537 449 02	Vacuum line light green D >> - MJ 1979		1	
16	928 537 394 02	Clip D >> - MJ 1979		8	
(16)	928 537 394 03	Clip D - MJ 1980>>		8	
17	928 537 411 02	Clip D >> - MJ 1979		4	
-	999 911 227 40	Spacer D >> - MJ 1979		*	
18		shorten to: D >> - MJ 1979	915 MM	2	

Model	Year	MG	SG	Illustration	Restrictions	UPD	7:21	27.10.2023
928	1978	8	04	804-010		738		

Pos	Part Number	Description	Remark	Qty	Model
19	928 537 443 02	vacuum reservoir D >> - MJ 1979		1	
20	900 075 145 02	Hexagon bolt M 5 X 16 D >> - MJ 1979		2	
21	900 025 003 02	Washer A 5,3 D >> - MJ 1979		4	
22	N 012 222 4	Spring washer A 5 D >> - MJ 1979		2	
23	N 011 005 14	Hexagon nut M 5 Discontinued part		2	
23	900 076 091 01	Hexagon nut M 5		2	
24	901 628 745 20	t-piece D >> - MJ 1979		1	
25	928 537 077 02	control valve D >> - MJ 1979	lhd	1	
(25)	928 537 078 02	control valve D >> - MJ 1979	rhd	1	
26	999 166 054 02	Retaining plate Discontinued part		4	
26	999 166 054 01	Retaining plate		4	
(27)	928 537 079 02	throttle control element D >> - MJ 1979	rhd	1	
27	928 537 080 02	throttle control element ELEMENT D >> - MJ 1979	lhd	1	
28	N 013 968 7	panel screw B 4,8 X 13 Discontinued part		2	
28	900 143 097 01	panel screw B 4,8 X 13		2	
29	900 025 003 02	Washer A 5,3 D >> - MJ 1979		4	
30	928 537 361 02	Valve D >> - MJ 1979		1	
31	928 574 689 02	Connecting piece D >> - MJ 1979		1	

Model	Year	MG	SG	Illustration	Restrictions	UPD	7:21	27.10.2023
928	1978	8	04	804-010		738		

Pos	Part Number	Description	Remark	Qty	Model
32	928 624 401 02	Servomotor D - MJ 1980>>	left	1	
(32)	928 624 402 02	Servomotor D - MJ 1980>>	right	1	
32A	928 624 403 00	operating rod D - MJ 1980>>		2	
33	999 591 570 40	Clip D - MJ 1980>>		2	
-		Wiring looms See main group 9 (Electrics) 9/02/15			

Model	Year	MG	SG	Illustration	Restrictions	UPD	7:21	27.10.2023
928	1978	8	04	804-015		738		

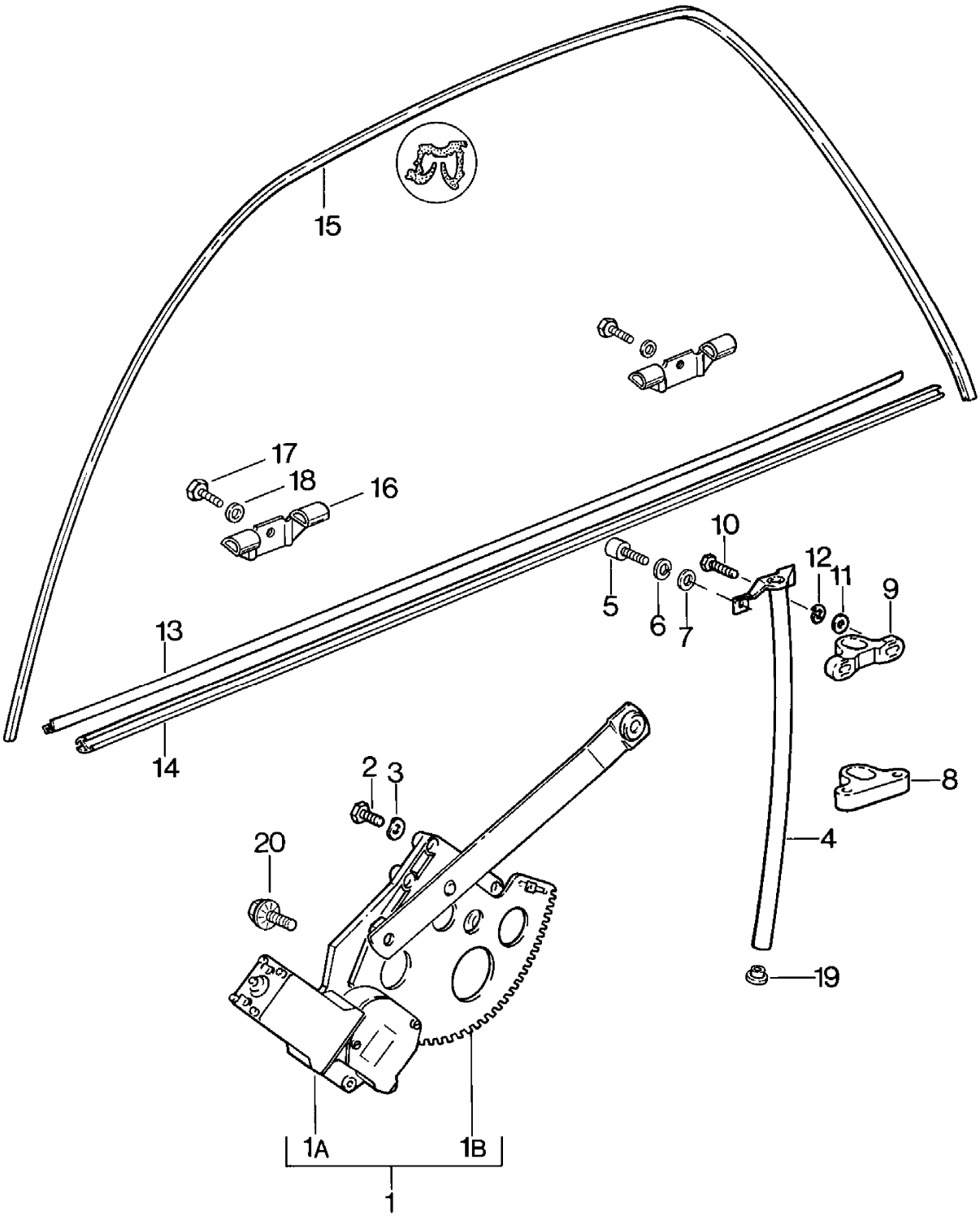

Model	Year	MG	SG	Illustration	Restrictions	UPD	7:21	27.10.2023
928	1978	8	04	804-015		738		

Pos	Part Number	Description	Remark	Qty	Model
		Window regulator			
1	928 537 075 02	**Window regulator** **Discontinued part**	left	1	
1	928 537 075 06	**Window regulator**	left	1	
1	928 537 076 02	**Window regulator** **Discontinued part**	right	1	
1	928 537 076 06	**Window regulator**	right	1	
1A	928 624 013 04	**Electric drive** **Window regulator** **only in conj. with:** **928.537.075.02**	left	1	
1	928 624 013 03	**Electric drive** **Window regulator** **only in conj. with:** **928.537.075.05**	left	1	
1A	928 624 014 04	**Electric drive** **Window regulator** **only in conj. with:** **928.537.076.02**	right	1	
1	928 624 014 03	**Electric drive** **Window regulator** **only in conj. with:** **928.537.076.05**	right	1	
1B	928 537 909 02	**Window regulator** **without:** **Electric drive** **only in conj. with:** **928.537.075.02** **Discontinued part**	left	1	
1B	928 537 909 04	**Window regulator** **without:** **Electric drive** **only in conj. with:** **928.537.075.05**	left	1	
1B	928 537 910 02	**Window regulator** **without:** **Electric drive** **only in conj. with:** **928.537.076.02** **Discontinued part**	right	1	
1B	928 537 910 04	**Window regulator** **without:** **Electric drive** **only in conj. with:** **928.537.076.05**	right	1	
2	N 010 210 13	**Hexagon bolt** **M 6 X 10**		8	

Model	Year	MG	SG	Illustration	Restrictions	UPD	7:21	27.10.2023
928	1978	8	04	804-015		738		

Pos	Part Number	Description	Remark	Qty	Model
3	N 012 226 5	Spring washer B 6		8	
4	928 537 263 02	guide tube	left	1	
(4)	928 537 264 02	guide tube	right	1	
5	900 067 008 02	Socket head bolt M 6 X 12 Discontinued part		4	
5	900 067 008 03	Socket head bolt M 6 X 12		4	
6	900 151 007 02	Washer B 7,4 Discontinued part		4	
6	900 151 007 03	Washer B 7,4		4	
7	N 012 006 4	spring ring B 6		4	
8	928 537 259 02	Glide piece	left lower	2	
(8)	928 537 260 02	Glide piece	right lower	2	
9	928 537 289 02	Glide piece	left upper	2	
(9)	928 537 290 02	Glide piece	right upper	2	
10	900 075 016 02	Hexagon bolt M 6 X 22 Discontinued part		4	
10	900 075 016 03	Hexagon bolt M 6 X 22		4	
11	N 011 524 7	Washer B 6,4 Discontinued part		4	
11	N 011 524 27	Washer B 6,4		4	
12	N 012 006 4	spring ring B 6		4	
13	928 537 319 03	Window aperture seal D >> - MJ 1979 Discontinued part	left	1	
13	928 537 319 03	Window aperture seal D - MJ 1980>>	left	1	

Model	Year	MG	SG	Illustration	Restrictions	UPD	7:21	27.10.2023
928	1978	8	04	804-015		738		

Pos	Part Number	Description	Remark	Qty	Model
(13)	928 537 320 03	Window aperture seal D >> - MJ 1979 Discontinued part	right	1	
(13)	928 537 320 03	Window aperture seal D - MJ 1980>>	right	1	
14	928 537 321 03	Window aperture seal	left outer	1	
14	928 537 321 03	Window aperture seal	left outer	1	
(14)	928 537 322 03	Window aperture seal Discontinued part	right outer	1	
(14)	928 537 322 04	Window aperture seal	right outer	1	
(14)	928 537 322 03	Window aperture seal Discontinued part	right outer	1	
(14)	928 537 322 04	Window aperture seal	right outer	1	
15	928 537 323 03	Window guide	left	1	
(15)	928 537 324 03	Window guide Discontinued part	right	1	
(15)	928 537 324 03	Window guide	right	1	
-	999 920 004 02	U-clip		10	
16	928 537 085 03	Bearing angle		4	
17	N 014 761 2	Socket head bolt with hexagon socket head M 6 X 12 Discontinued part		4	
17	900 119 129 01	Socket head bolt M 6 X 12		4	
-	N 012 226 5	Spring washer B 6		4	
18	N 011 524 7	Washer A 6,4 Discontinued part		4	
18	N 011 524 27	Washer A 6,4		4	
19	928 537 285 02	Insert		2	
20	999 093 004 02	Hexagon bolt		6	

Model	Year	MG	SG	Illustration	Restrictions	UPD	7:22	27.10.2023
928	1978	8	04	804-020		738		

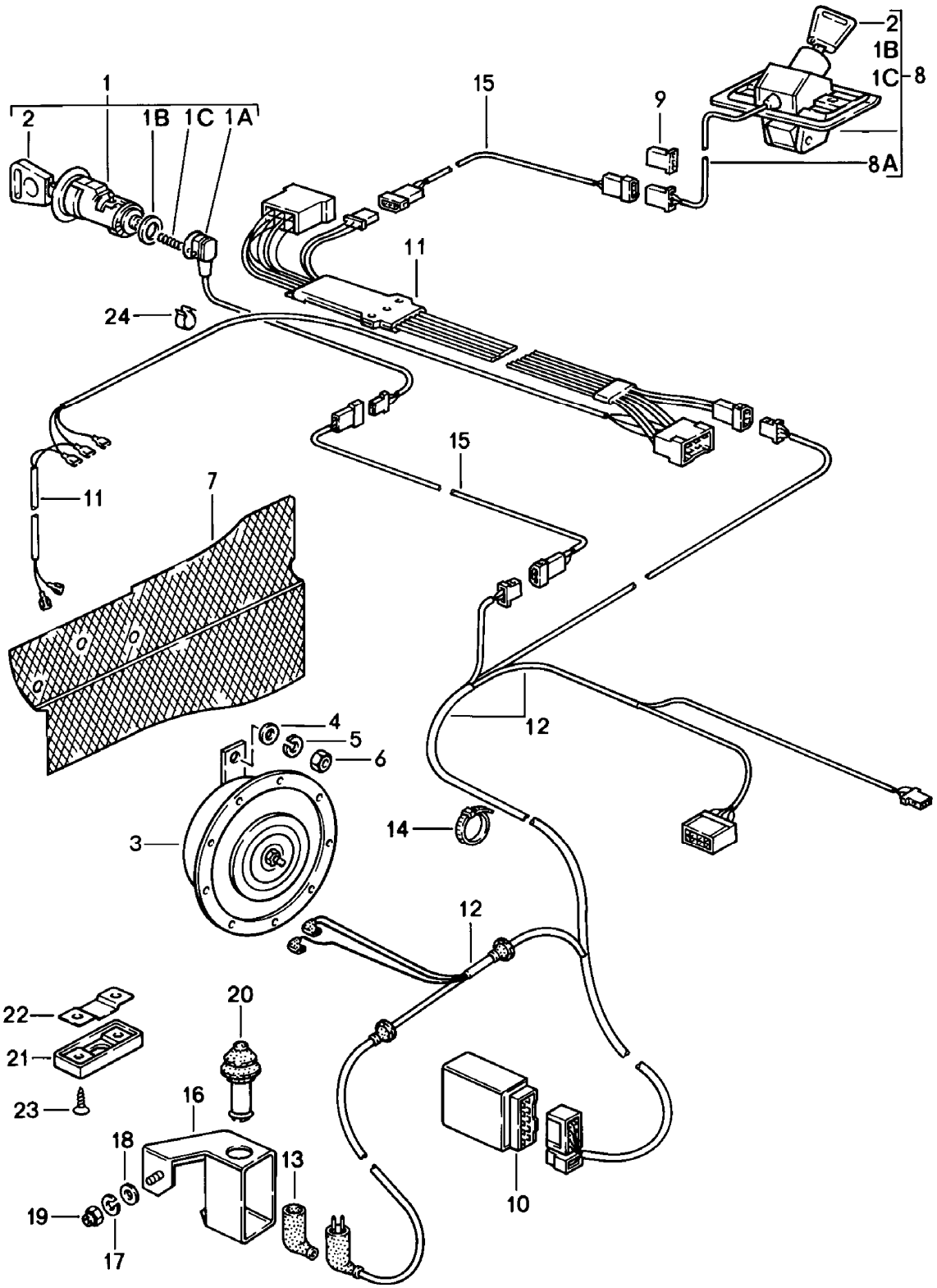

Model	Year	MG	SG	Illustration	Restrictions	UPD	7:22	27.10.2023
928	1978	8	04	804-020		738		

Pos	Part Number	Description	Remark	Qty	Model
		alarm system			
1	928 537 906 02	Lock cylinders with: Micro switch with stipulated lock number When ordering, please provide the vehicle identification and the lock number	right	1	
-		valet key		1	
-		key		1	
1	928 537 905 02	Lock cylinders with: Micro switch with stipulated lock number When ordering, please provide the vehicle identification and the lock number valet key key	left	1 1 1	
1	928 537 908 02	Lock cylinders with: Micro switch W/o stipulated lock number valet key key	right	1 1	
1	928 537 907 02	Lock cylinders with: Micro switch W/o stipulated lock number valet key key	left	1 1	
(1A)	928 537 713 02	Contact switch	left	1	
1A	928 537 714 02	Contact switch	right	1	
1B	928 537 493 02	Pressure spring		3	
1C	928 537 495 03	Seal		3	
2	928 537 019 02	key with: Key lamp with stipulated lock number When ordering, please provide the vehicle identification and the lock number		1	
2	928 537 639 10	Blank key (uncut)		1	
3	928 635 105 00	high volume horn		1	

Model	Year	MG	SG	Illustration	Restrictions	UPD	7:22	27.10.2023
928	1978	8	04	804-020		738		

Pos	Part Number	Description	Remark	Qty	Model
4	900 025 008 09	Washer A 10,5 Discontinued part		1	
4	900 025 008 04	Washer A 10,5		1	
4	900 025 008 0E	Washer A 10,5	yellow	1	
5	900 027 016 02	spring ring B 10 Discontinued part		1	
5	900 027 016 03	spring ring B 10		1	
6	N 011 010 6	Hexagon nut M 10 Discontinued part		1	
6	N 101 552 10	Hexagon nut M 10		1	
7	928 504 353 02	protective grille	lhd	1	
7	927 504 353 02	protective grille	rhd	1	
8	928 512 901 03	Lid lock with stipulated lock number When ordering, please provide the vehicle identification and the lock number key		1 1	
8	928 512 903 03	Lid lock W/o stipulated lock number key		1 1	
8A	928 512 070 02	Contact switch	rear	1	
9	171 971 999 B	rd. connector sleeve housing		3	
10	928 618 117 00	Control unit for anti-theft alarm		1	
10	928 618 117 01	Control unit for anti-theft alarm		1	"CH."
11	928 612 008 04	Wire set Discontinued part		1	
11	928 612 008 04	Wire set		1	
12	928 612 182 02	Wire set with: fuse for Rear lid	lhd	1	

Model	Year	MG	SG	Illustration	Restrictions	UPD	7:22	27.10.2023
928	1978	8	04	804-020		738		

Pos	Part Number	Description	Remark	Qty	Model
12	928 612 182 00	Wire set without: fuse for Rear lid	lhd	1	
12	927 612 182 02	Wire set	rhd	1	
13	113 927 249	Protective cap		1	
14	999 513 003 40	Cable ties		4	
15	928 612 183 00	Wire set for doors and Rear lid		3	
16	928 637 101 01	Selector housing		1	
17	N 012 005 3	spring ring		1	
18	900 151 027 02	Washer A 5,3 Discontinued part		1	
18	900 151 027 03	Washer A 5,3		1	
19	N 011 005 14	Hexagon nut M 5 Discontinued part		1	
19	900 076 091 01	Hexagon nut M 5		1	
20	928 613 173 00	Contact switch		1	
21	928 637 121 00	Protective cap		1	
22	928 637 123 00	Inner panel		1	
23	N 013 994 2	countersunk panel screw B 4,8 X 16		2	
24	999 591 465 02	Cable fastener		2	
(24A)	N 011 005 14	Hexagon nut Discontinued part		1	
(24A)	900 076 091 01	Hexagon nut		1	

Model	Year	MG	SG	Illustration	Restrictions	UPD	7:22	27.10.2023
928	1978	8	05	805-000		738		

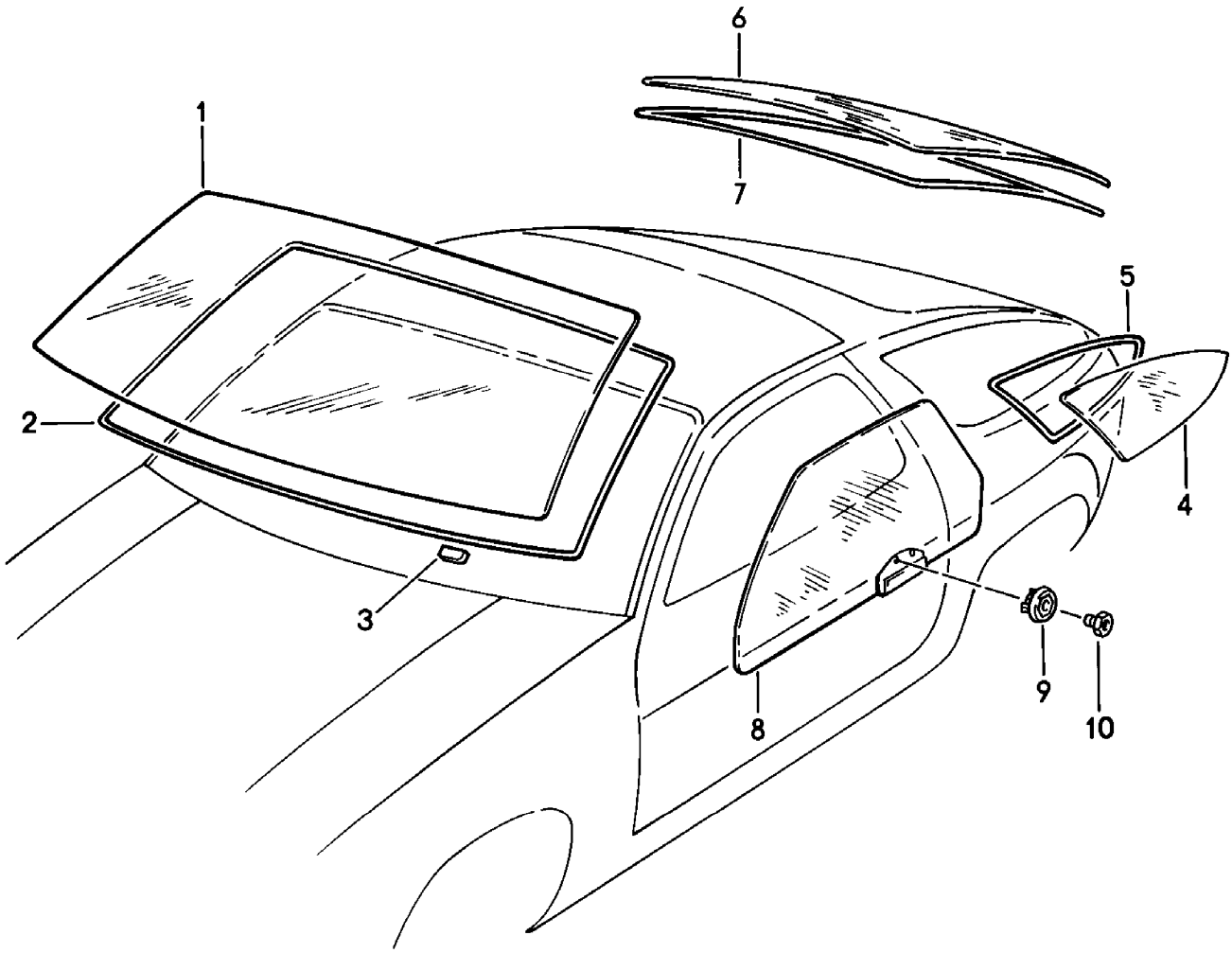

Model	Year	MG	SG	Illustration	Restrictions	UPD	7:22	27.10.2023
928	1978	8	05	805-000		738		

Pos	Part Number	Description	Remark	Qty	Model
		Window glasses			
1	928 541 013 02	Windscreen Clear D >> - MJ 1980 Discontinued part		1	
1	928 541 011 06	Windscreen Clear Discontinued part		1	
1	928 541 012 01	Windscreen Clear		1	
1	928 541 011 12	Windscreen Clear		1	
(1)	928 541 014 03	Windscreen brown	Tinted	1	
(1)	928 541 011 05	Windscreen green Discontinued part	Tinted	1	
(1)	928 541 011 11	Windscreen green	Tinted	1	
1	928 541 011 07	Windscreen (with tinted sun strip) green Discontinued part	green	1	
1	928 541 013 01	Windscreen (with tinted sun strip) green Discontinued part	green	1	
1	928 541 011 13	Windscreen (with tinted sun strip) green	green	1	PR:567
2	477 898 011 A	Gasket set Windscreen		1	
3	928 541 121 04	Underlay		2	
4	928 543 101 02	Side window Clear D >> - MJ 1979	left	1	
(4)	928 543 102 02	Side window Clear D >> - MJ 1979	right	1	
(4)	928 543 103 08	Side window brown	left Tinted	1	
(4)	928 543 103 03	Side window brown Rear spoiler	left	1	

Model	Year	MG	SG	Illustration	Restrictions	UPD	7:22	27.10.2023
928	1978	8	05	805-000		738		

Pos	Part Number	Description	Remark	Qty	Model
(4)	928 543 104 02	Side window brown	right Tinted	1	
(4)	928 543 104 03	Side window brown Rear spoiler	right	1	
(4)	928 543 105 02	Side window green	left Tinted	1	
(4)	928 543 105 03	Side window green Rear spoiler	left	1	
(4)	928 543 106 02	Side window green	right Tinted	1	
(4)	928 543 106 03	Side window green Rear spoiler Side window F 92-BS800 193>> F 92-BS840 297>> F 92-BS829 571>> F 92-BS820 567>>	right	1	928 928S "J.." "USA"
(4)	928 543 103 08	Side window brown Discontinued part	left Tinted	1	
(4)	928 543 103 08	Side window brown	left Tinted	1	
(4)	928 543 103 09	Side window brown Rear spoiler	left	1	
(4)	928 543 104 08	Side window brown	right Tinted	1	
(4)	928 543 104 09	Side window brown Rear spoiler Discontinued part	right	1	
(4)	928 543 104 09	Side window brown Rear spoiler	right	1	
(4)	928 543 105 08	Side window green	left Tinted	1	
(4)	928 543 105 07	Side window green Rear spoiler	left	1	
(4)	928 543 106 08	Side window green	right Tinted	1	

Model	Year	MG	SG	Illustration	Restrictions	UPD	7:22	27.10.2023
928	1978	8	05	805-000		738		

Pos	Part Number	Description	Remark	Qty	Model
(4)	928 543 106 09	Side window green Rear spoiler	right	1	
-		Sealing frame F >> 92-BS800 192 F >> 92-BS840 296 F >> 92-BS829 570 F >> 92-BS820 566			928 928S "J.." "USA"
5	928 543 037 03	Sealing frame without: Rear spoiler Discontinued part	left	1	
5	928 543 037 04	Sealing frame without: Rear spoiler	left	1	
5	928 543 038 03	Sealing frame without: Rear spoiler	right	1	
5	928 543 038 04	Sealing frame without: Rear spoiler	right	1	
(5)	928 543 045 03	Sealing frame with: Rear spoiler	left	1	
5	928 543 046 03	Sealing frame with: Rear spoiler F 92-BS800 193>> F 92-BS840 297>> F 92-BS829 571>> F 92-BS820 567>>	right	1	928 928S "J.." "USA"
5	928 543 045 04	Sealing frame Rear spoiler	left	1	
5	928 543 046 04	Sealing frame Rear spoiler	right	1	
6	928 545 107 03	Rear window Rear spoiler brown	Tinted	1	
(6)	928 545 018 02	Rear window Rear spoiler green	Tinted	1	
7	999 915 509 40	Adhesive set Discontinued part		1	
7	000 043 300 94	Adhesive set		1	

Model	Year	MG	SG	Illustration	Restrictions	UPD	7:22	27.10.2023
928	1978	8	05	805-000		738		

Pos	Part Number	Description	Remark	Qty	Model
8	928 537 013 02	Door window Clear	left	1	
(8)	928 537 014 02	Door window Clear	right	1	
(8)	928 537 015 02	Door window brown	left Tinted	1	
(8)	928 537 016 02	Door window brown	right Tinted	1	
(8)	928 537 101 02	Door window green	left Tinted	1	
(8)	928 537 102 02	Door window green	right Tinted	1	
9	928 537 281 04	Bungs		4	
10	928 537 277 02	threaded insert		4	
14	000 043 306 39	activator activator		X	
15	000 043 306 46	adhesive		X	

Model	Year	MG	SG	Illustration	Restrictions	UPD	7:22	27.10.2023
928	1978	8	06	806-000		738		

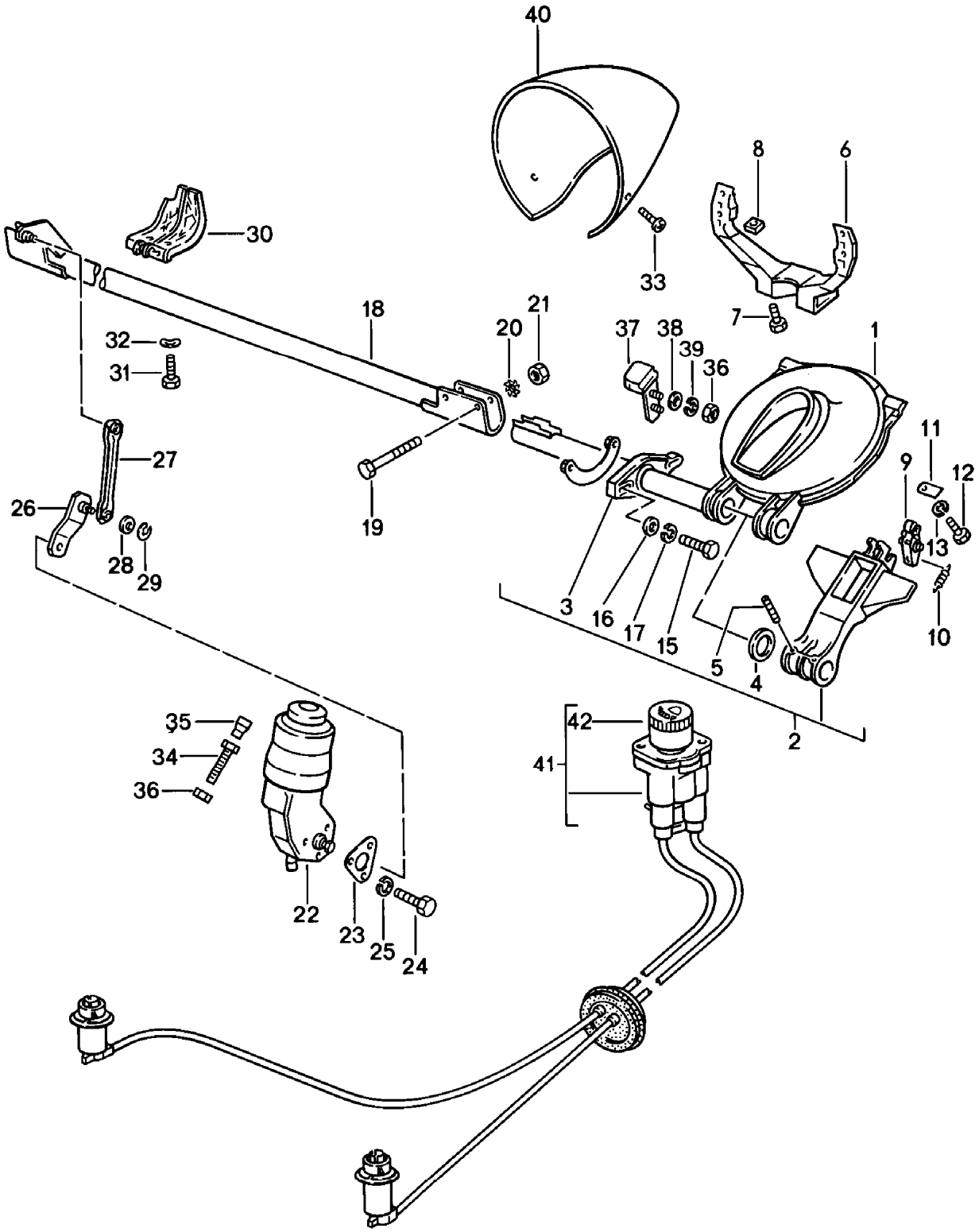

Model	Year	MG	SG	Illustration	Restrictions	UPD	7:22	27.10.2023
928	1978	8	06	806-000		738		

Pos	Part Number	Description	Remark	Qty	Model
		Pop-up headlight			
1	928 750 243 02	Pivot mounting trim Discontinued part		2	
2	928 750 097 05	Follower lever	left	1	
2	928 750 098 05	Follower lever	right	1	
3	928 750 211 04	Mounting Headlights shaft D >> - MJ 1981 Discontinued part		2	
3	928 750 211 06	Mounting Headlights shaft		2	
3	928 750 211 04	Mounting Headlights shaft D - MJ 1982>> - MJ 1982 Discontinued part		2	
3	928 750 211 06	Mounting Headlights shaft D - MJ 1982>>		2	
4	928 750 253 02	Washer		4	
5	900 095 085 02	spring pin		4	
6	928 750 285 03	carrier arm		2	
7	900 067 011 02	Socket head bolt M 6 X 20 Discontinued part		4	
7	900 067 011 03	Socket head bolt M 6 X 20		4	
-	999 025 108 02	Washer 6,5		4	
8	900 076 010 02	Nut M 6 Discontinued part		4	
8	900 076 010 0B	Nut M 6		4	
8	900 076 010 03	Nut M 6		4	
9	928 750 079 02	locking segment		2	
10	928 750 291 02	tension spring		2	
11	928 750 325 02	strap		8	

Model	Year	MG	SG	Illustration	Restrictions	UPD	7:22	27.10.2023
928	1978	8	06	806-000		738		

Pos	Part Number	Description	Remark	Qty	Model
12	999 015 004 02	Screw AM 5 X 10		X	
13	N 012 222 4	Spring washer B 5		8	
-	928 750 255 05	angle		2	
14	928 750 071 02	plate		2	
15	900 074 015 02	Hexagon bolt M 6 X 30		4	
16	N 011 666 7	Washer B 6,4		4	
17	N 012 006 4	spring ring B 6		4	
18	928 750 041 05	shaft		1	
19	N 010 339 3	Hexagon bolt M 6 X 45		4	
20	900 115 006 01	Serrated washer A 6,4		4	
21	900 096 006 02	Hexagon nut M 6		4	
22	928 624 021 00	Electric motor Pop-up headlight		1	
23	928 750 207 02	Spacer		1	
24	900 075 010 02	Hexagon nut M 6 X 12 Discontinued part		3	
24	N 010 212 14	Hexagon bolt M 6 X 12 Discontinued part		3	
24	999 072 005 09	Hexagon nut M 6 X 12 Discontinued part		3	
24	999 072 005 01	Hexagon bolt M 6 X 12		3	
25	N 012 006 4	spring ring B 6		3	
26	928 750 065 03	Adjusting lever		1	
27	928 750 067 02	slide rod		1	
28	900 031 001 02	Washer 8,4 Discontinued part		2	

Model	Year	MG	SG	Illustration	Restrictions	UPD	7:22	27.10.2023
928	1978	8	06	806-000		738		

Pos	Part Number	Description	Remark	Qty	Model
28	900 031 105 01	Washer 8,4		2	
29	900 116 009 01	Retaining washer 6		2	
30	928 750 055 02	Guide		1	
31	999 217 019 02	Hexagon bolt M 6 X 12		2	
32	N 012 226 5	Spring washer B6		2	
33	999 919 008 07	fillister hd. bolt 4 X 13 D >> - MJ 1981 Discontinued part		1	
33	PCG 919 008 07	fillister hd. bolt 1 set bolts 4 X 13 contents of package:	10	1	
33	900 143 125 07	oval head panel screw 3,5 X 13 D - MJ 1982>> - MJ 1982		6	
34	N 010 221 3	Hexagon bolt M 6 X 35		2	
35	914 504 319 00	Rubber grommet		2	
36	900 076 010 02	Nut M 6 Discontinued part		2	
36	900 076 010 0B	Nut M 6		2	
36	900 076 010 03	Nut M 6		2	
37	928 750 031 02	stop plate		2	
38	900 151 003 02	Washer A 6,4 Discontinued part		4	
38	900 151 006 03	Washer A 6,4		4	
39	N 012 006 4	spring ring B 6		4	
40	928 750 083 02	housing Pop-up headlight		2	

Model	Year	MG	SG	Illustration	Restrictions	UPD	7:22	27.10.2023
928	1978	8	06	806-000		738		

Pos	Part Number	Description	Remark	Qty	Model
(41)	928 631 220 01	Control and regulating unit Headlight range control Manually adjustable to use before: F >> 92-89102 996 F >> 92-89209 622 2 Distance piece 928.631.203.03 also use:		1	
42	928 631 221 01	Rot. knob		1	
-	928 631 223 02	Rosette		1	
-	928 799 750 07	tension spring		2	

Model	Year	MG	SG	Illustration	Restrictions	UPD	7:22	27.10.2023
928	1978	8	07	807-000		738		

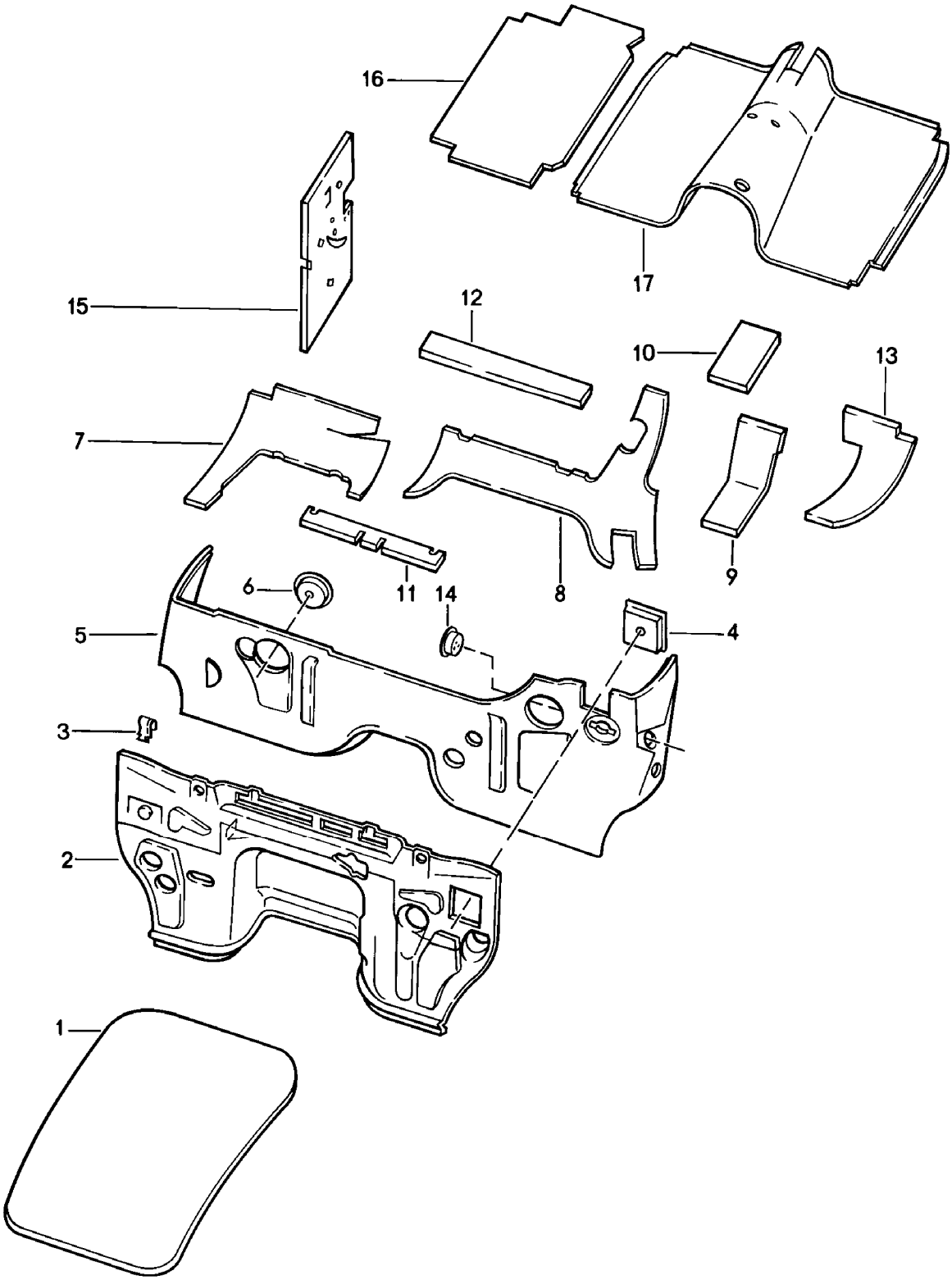

Model	Year	MG	SG	Illustration	Restrictions	UPD	7:22	27.10.2023
928	1978	8	07	807-000		738		

Pos	Part Number	Description	Remark	Qty	Model
		Body Sound absorber			
1	928 556 285 02	Damping Engine bay	rear	1	
(1)	928 556 241 02	Sound absorber Engine bay	front	1	
2	928 556 089 02	Damping Engine bay	lhd	1	
(2)	927 556 089 02	Damping Engine bay	rhd	1	
3	928 556 295 02	Clip		7	
4	928 556 057 03	Insert Firewall		1	
5	928 556 051 02	Damping Firewall D >> - MJ 1981 Discontinued part	lhd	1	
5	928 556 051 03	Damping Firewall	lhd	1	
5	927 556 051 02	Damping Firewall D >> - MJ 1981	rhd	1	
5	927 556 041 03	Damping Firewall D - MJ 1982>> - MJ 1982	rhd	1	
6	928 556 063 05	Insert Firewall		1	
7	928 556 155 02	Sound absorber Cross panel D - MJ 1978>> - MJ 1978	right lhd	1	
7	928 556 155 04	Damping for bulkhead D - MJ 1979>>	right lhd	1	
(7)	927 556 155 03	Damping Cross panel	right rhd	1	
8	928 556 159 03	Damping Cross panel	lhd center	1	
(8)	927 556 159 04	Damping Discontinued part	rhd	1	
(8)	927 556 159 04	Damping Cross panel	rhd center	1	
9	928 556 169 04	Insert Steering	lhd	1	

Model	Year	MG	SG	Illustration	Restrictions	UPD	7:22	27.10.2023
928	1978	8	07	807-000		738		

Pos	Part Number	Description	Remark	Qty	Model
9	927 556 169 03	Insert Steering	rhd	1	
10	928 556 171 04	Insert Brake servo		1	
11	928 556 267 02	Damping Cross panel		1	
12	928 556 387 03	Damping heater unit		1	
13	928 556 173 05	Damping for bulkhead	left lhd	1	
13	927 556 173 03	Damping Cross panel	left rhd	1	
14	928 556 075 02	Insert Headlight range control D >> - MJ 1981		1	
14	928 556 075 02	Insert Headlight range control D - MJ 1982>> - MJ 1982	rhd	1	
14	928 556 075 06	Insert Headlight range control D - MJ 1982>> - MJ 1982	lhd	1	
15	928 556 353 02	sound absorber for side panel	lhd	1	
15	928 556 354 02	Damping Side part	lhd	1	
15	927 556 353 02	Damping Side part	rhd	1	
16	928 556 291 02	Sound absorber floor assembly D >> - MJ 1979 Discontinued part	lhd	1	
16	928 556 291 03	Insulation for floor	lhd	1	
16	927 556 291 02	Damping floor assembly	rhd	1	
16	928 556 292 02	Damping floor assembly	lhd	1	
16	927 556 292 02	Damping floor assembly D >> - MJ 1979 Discontinued part	rhd	1	
16	927 556 292 05	Insulation for floor Discontinued part	rhd	1	
16	927 556 292 05	Insulation for floor	rhd	1	
17	928 556 031 02	Damper for tunnel		1	

Model	Year	MG	SG	Illustration	Restrictions	UPD	7:23	27.10.2023
928	1978	8	07	807-001		738		

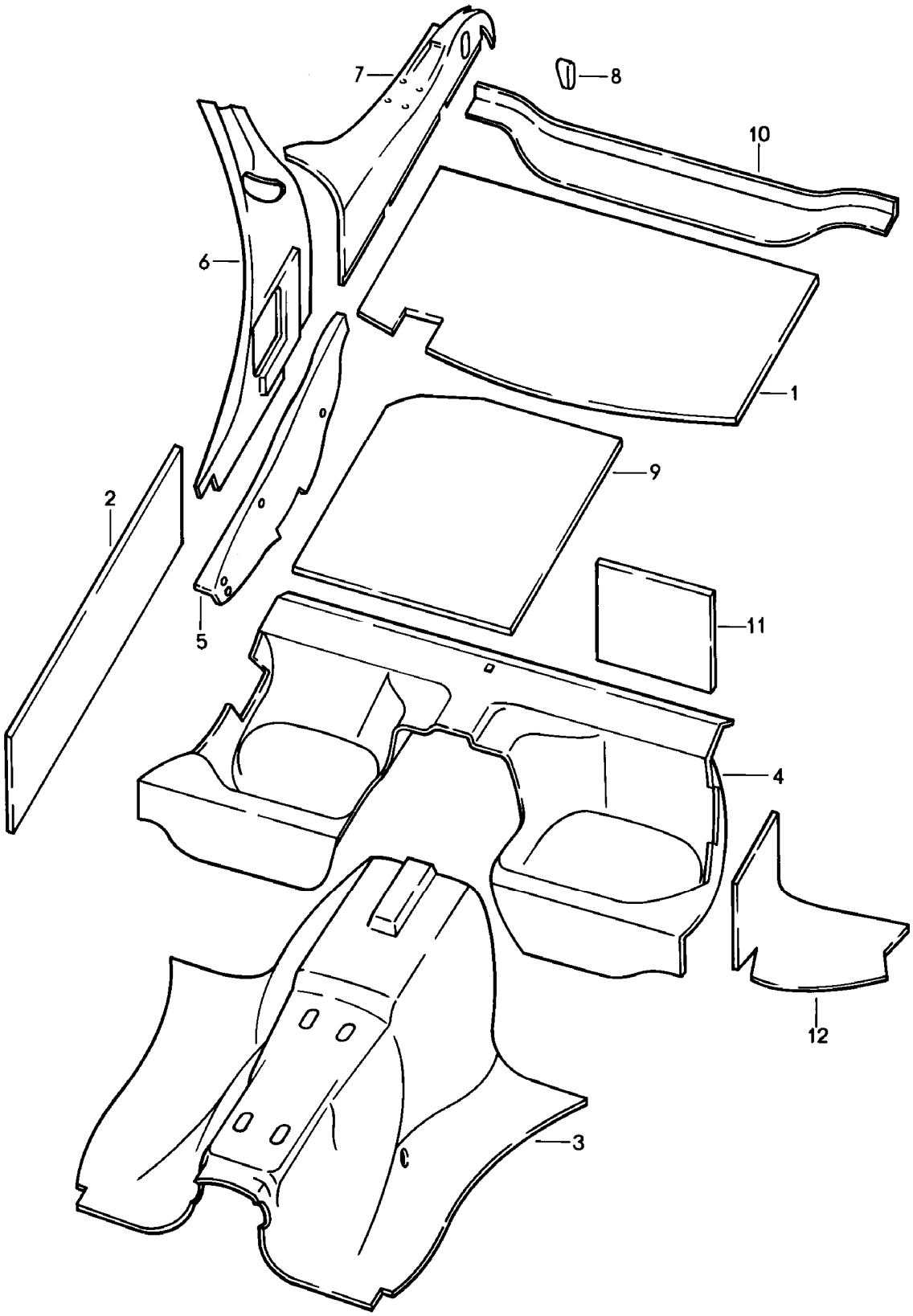

Model	Year	MG	SG	Illustration	Restrictions	UPD	7:23	27.10.2023
928	1978	8	07	807-001		738		

Pos	Part Number	Description	Remark	Qty	Model
		Body sound absorbers			
1	**928 556 233 02**	**Damping Roof**		**1**	
2	**928 556 235 02**	**sound absorber for door**		**2**	
3	**928 556 033 02**	**Damper for tunnel**		**1**	
3	**928 556 033 03**	**Damper for tunnel**		**1**	**AUT.**
4	**928 556 055 02**	**Damping seat well**		**1**	
5	**928 556 205 02**	**Damping**	**left lhd**	**1**	
5	**928 556 206 02**	**Damping**	**right lhd**	**1**	
5	**927 556 205 03**	**Damping**	**left rhd**	**1**	
5	**927 556 206 03**	**Damping Carrier**	**right rhd**	**1**	
6	**928 556 261 05**	**Damping**	**left front**	**1**	
6	**928 556 262 05**	**Damping Side part**	**right front**	**1**	
7	**928 556 251 03**	**Damping**	**left rear**	**1**	
7	**928 556 252 03**	**Damping Side part**	**right rear**	**1**	
8	**928 556 265 02**	**Insert Side part**		**1**	
9	**928 556 239 02**	**Damping boot floor plate**		**1**	
10	**928 556 289 02**	**Damping Cross panel**		**1**	
11	**928 556 271 02**	**Damping seat well**		**2**	
12	**928 556 273 02**	**Damping**		**1**	
12	**928 556 274 02**	**Damping seat well**		**1**	

Model	Year	MG	SG	Illustration	Restrictions	UPD	7:23	27.10.2023
928	1978	8	07	807-005		738		

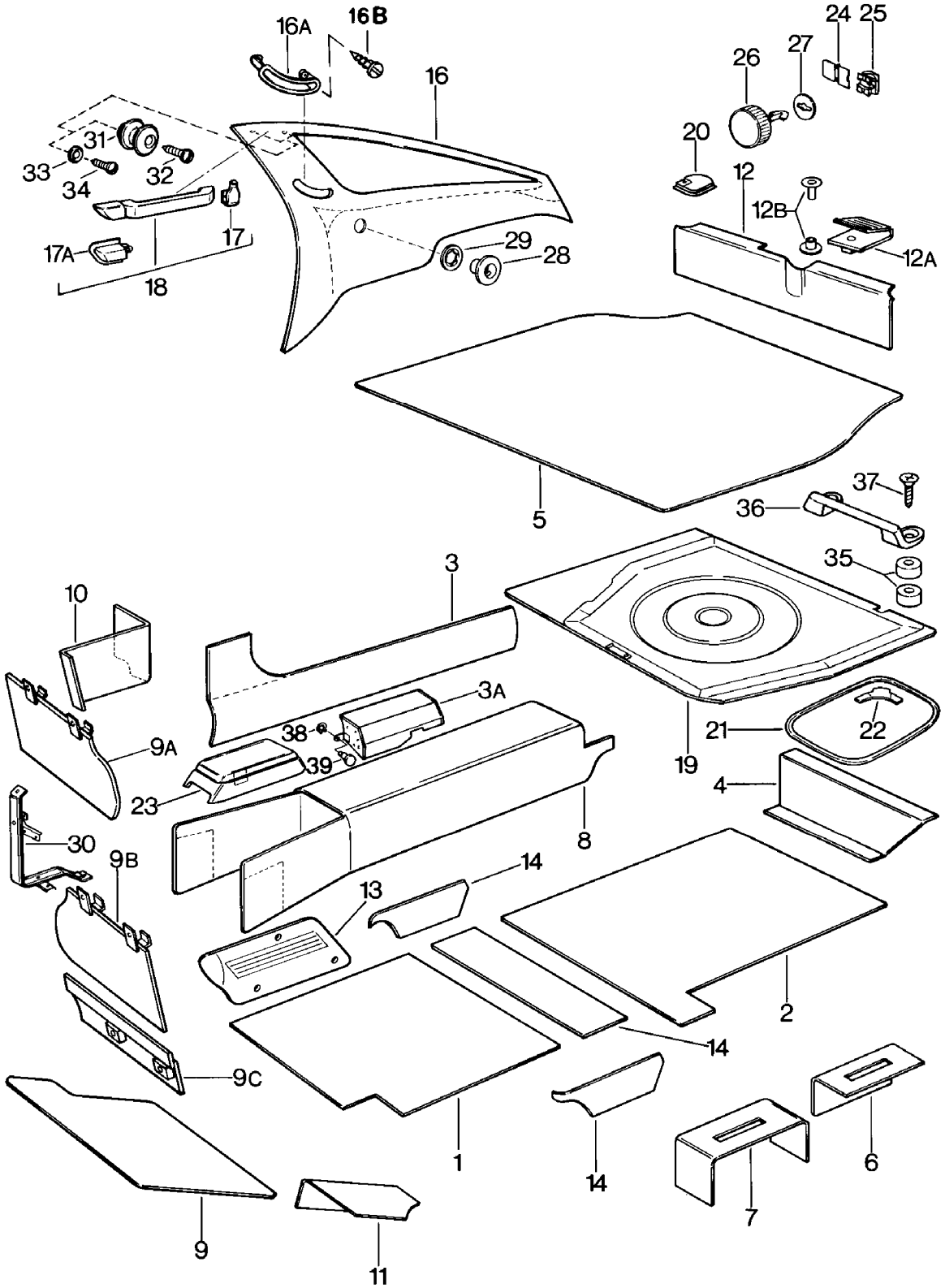

Model	Year	MG	SG	Illustration	Restrictions	UPD	7:23	27.10.2023
928	1978	8	07	807-005		738		

Pos	Part Number	Description	Remark	Qty	Model
		trims			
1	928 551 011 02	Flooring Carpet D >> - MJ 1978	left lhd long	1	
	08/77-07/7820B	Dark green D - MJ 1978>> - MJ 1978			
	08/77-07/7840A	brown D - MJ 1978>> - MJ 1978			
	08/77-07/7870A	Black D - MJ 1978>> - MJ 1978			
	08/77-07/7840D	Cork D - MJ 1978>> - MJ 1978			
(1)	928 551 012 02	Flooring Carpet D >> - MJ 1978	right lhd long	1	
	08/77-07/7820B	Dark green D - MJ 1978>> - MJ 1978			
	08/77-07/7840A	brown D - MJ 1978>> - MJ 1978			
	08/77-07/7870A	Black D - MJ 1978>> - MJ 1978			
	08/77-07/7840D	Cork D - MJ 1978>> - MJ 1978			
1	927 551 011 02	Flooring Carpet D >> - MJ 1978	left rhd long	1	
	08/77-07/7820B	Dark green D - MJ 1978>> - MJ 1978			
	08/77-07/7840A	brown D - MJ 1978>> - MJ 1978			
	08/77-07/7870A	Black D - MJ 1978>> - MJ 1978			
	08/77-07/7840D	Cork D - MJ 1978>> - MJ 1978			
(1)	927 551 012 02	Flooring Carpet D >> - MJ 1978	right rhd long	1	
	08/77-07/7820B	Dark green D - MJ 1978>> - MJ 1978			
	08/77-07/7840A	brown D - MJ 1978>> - MJ 1978			

Model	Year	MG	SG	Illustration	Restrictions	UPD	7:23	27.10.2023
928	1978	8	07	807-005		738		

Pos	Part Number	Description	Remark	Qty	Model
	08/77-07/7870A	Black D - MJ 1978>> - MJ 1978			
	08/77-07/7840D	Cork D - MJ 1978>> - MJ 1978			
1	928 551 011 02	Flooring Carpet D - MJ 1979>> - MJ 1979	left lhd short	1	
	08/78-07/7970E	Black D - MJ 1979>> - MJ 1979			
	08/78-07/7920E	green D - MJ 1979>> - MJ 1979			
	08/78-07/7940E	brown D - MJ 1979>> - MJ 1979			
	08/78-07/7941D	Cork D - MJ 1979>> - MJ 1979			
(1)	928 551 012 02	Flooring Carpet D - MJ 1979>> - MJ 1979	right lhd short	1	
	08/78-07/7970E	Black D - MJ 1979>> - MJ 1979			
	08/78-07/7920E	green D - MJ 1979>> - MJ 1979			
	08/78-07/7940E	brown D - MJ 1979>> - MJ 1979			
	08/78-07/7941D	Cork D - MJ 1979>> - MJ 1979			
1	927 551 011 02	Flooring Carpet D - MJ 1979>> - MJ 1979	left rhd short	1	
	08/78-07/7970E	Black D - MJ 1979>> - MJ 1979			
	08/78-07/7920E	green D - MJ 1979>> - MJ 1979			
	08/78-07/7940E	brown D - MJ 1979>> - MJ 1979			
	08/78-07/7941D	Cork D - MJ 1979>> - MJ 1979			
(1)	927 551 012 02	Flooring Carpet D - MJ 1979>> - MJ 1979	right rhd short	1	
	08/78-07/7970E	Black D - MJ 1979>> - MJ 1979			

Model	Year	MG	SG	Illustration	Restrictions	UPD	7:23	27.10.2023
928	1978	8	07	807-005		738		

Pos	Part Number	Description	Remark	Qty	Model
	08/78-07/7920E	green D - MJ 1979>> - MJ 1979			
	08/78-07/7940E	brown D - MJ 1979>> - MJ 1979			
	08/78-07/7941D	Cork D - MJ 1979>> - MJ 1979			
(1)	928 551 011 03	Flooring Carpet	left lhd short	1	
	08/79-07/8270E	Black D - MJ 1980>>			
	08/79-07/8230B	blue D - MJ 1980>>			
	08/79-07/8240E	brown D - MJ 1980>>			
	08/79-07/8250B	beige D - MJ 1980>>			
	08/80-07/8220S	Mint green D - MJ 1981>>			
	08/80-07/8260A	Grey D - MJ 1981>>			
	08/77-07/8280E	wine red			
(1)	928 551 012 03	Flooring Carpet	right lhd short	1	
	08/79-07/8270E	Black D - MJ 1980>>			
	08/79-07/8230B	blue D - MJ 1980>>			
	08/79-07/8240E	brown D - MJ 1980>>			
	08/79-07/8250B	beige D - MJ 1980>>			
	08/80-07/8220S	Mint green D - MJ 1981>>			
	08/80-07/8260A	Grey D - MJ 1981>>			
	08/77-07/8280E	wine red			
(1)	927 551 011 03	Flooring Carpet	left rhd short	1	
	08/79-07/8270E	Black D - MJ 1980>>			

Model	Year	MG	SG	Illustration	Restrictions	UPD	7:23	27.10.2023
928	1978	8	07	807-005		738		

Pos	Part Number	Description	Remark	Qty	Model
	08/79-07/8230B	blue D - MJ 1980>>			
	08/79-07/8240E	brown D - MJ 1980>>			
	08/79-07/8250B	beige D - MJ 1980>>			
	08/80-07/8220S	Mint green D - MJ 1981>>			
	08/80-07/8260A	Grey D - MJ 1981>>			
	08/77-07/8280E	wine red			
(1)	927 551 012 03	Flooring Carpet	right rhd short	1	
	08/79-07/8270E	Black D - MJ 1980>>			
	08/79-07/8230B	blue D - MJ 1980>>			
	08/79-07/8240E	brown D - MJ 1980>>			
	08/79-07/8250B	beige D - MJ 1980>>			
	08/80-07/8220S	Mint green D - MJ 1981>>			
	08/80-07/8260A	Grey D - MJ 1981>>			
	08/77-07/8280E	wine red			
2	928 551 013 02	Flooring Carpet D >> - MJ 1978 Discontinued part	left long	1	
	08/77-07/7820B	Dark green D - MJ 1978>> - MJ 1978			
	08/77-07/7840A	brown D - MJ 1978>> - MJ 1978			
	08/77-07/7870A	Black D - MJ 1978>> - MJ 1978			
	08/77-07/7840D	Cork D - MJ 1978>> - MJ 1978			
(2)	928 551 014 02	Flooring Carpet D >> - MJ 1978 Discontinued part	right long	1	

Model	Year	MG	SG	Illustration	Restrictions	UPD	7:23	27.10.2023
928	1978	8	07	807-005		738		

Pos	Part Number	Description	Remark	Qty	Model
	08/77-07/7820B	Dark green D - MJ 1978>> - MJ 1978			
	08/77-07/7840A	brown D - MJ 1978>> - MJ 1978			
	08/77-07/7870A	Black D - MJ 1978>> - MJ 1978			
	08/77-07/7840D	Cork D - MJ 1978>> - MJ 1978			
2	928 551 013 04	Flooring Carpet D >> - MJ 1978	left long	1	
	08/77-07/7820B	Dark green D - MJ 1978>> - MJ 1978			
	08/77-07/7840A	brown D - MJ 1978>> - MJ 1978			
	08/77-07/7870A	Black D - MJ 1978>> - MJ 1978			
	08/77-07/7840D	Cork D - MJ 1978>> - MJ 1978			
(2)	928 551 014 04	Flooring Carpet D >> - MJ 1978	right long	1	
	08/77-07/7820B	Dark green D - MJ 1978>> - MJ 1978			
	08/77-07/7840A	brown D - MJ 1978>> - MJ 1978			
	08/77-07/7870A	Black D - MJ 1978>> - MJ 1978			
	08/77-07/7840D	Cork D - MJ 1978>> - MJ 1978			
2	928 551 013 02	Flooring Carpet D - MJ 1979>> Discontinued part	left short	1	
	08/78-07/8270E	Black D - MJ 1979>>			
	08/78-07/7920E	green D - MJ 1979>> - MJ 1979			
	08/78-07/8240E	brown D - MJ 1979>>			
	08/78-07/7941D	Cork D - MJ 1979>> - MJ 1979			

Model	Year	MG	SG	Illustration	Restrictions	UPD	7:23	27.10.2023
928	1978	8	07	807-005		738		

Pos	Part Number	Description	Remark	Qty	Model
	08/79-07/8230B	blue D - MJ 1980>>			
	08/79-07/8250B	beige D - MJ 1980>>			
	08/80-07/8220S	Mint green D - MJ 1981>>			
	08/80-07/8260A	Grey D - MJ 1981>>			
	08/81-07/8280E	wine red D - MJ 1982>> - MJ 1982			
(2)	928 551 014 02	Flooring Carpet D - MJ 1979>> Discontinued part	right short	1	
	08/78-07/8270E	Black D - MJ 1979>>			
	08/78-07/7920E	green D - MJ 1979>> - MJ 1979			
	08/78-07/8240E	brown D - MJ 1979>>			
	08/78-07/7941D	Cork D - MJ 1979>> - MJ 1979			
	08/79-07/8230B	blue D - MJ 1980>>			
	08/79-07/8250B	beige D - MJ 1980>>			
	08/80-07/8220S	Mint green D - MJ 1981>>			
	08/80-07/8260A	Grey D - MJ 1981>>			
	08/81-07/8280E	wine red D - MJ 1982>> - MJ 1982			
2	928 551 013 04	Flooring Carpet D - MJ 1979>>	left short	1	
	08/78-07/8270E	Black D - MJ 1979>>			
	08/78-07/7920E	green D - MJ 1979>> - MJ 1979			
	08/78-07/8240E	brown D - MJ 1979>>			

Model	Year	MG	SG	Illustration	Restrictions	UPD	7:23	27.10.2023
928	1978	8	07	807-005		738		

Pos	Part Number	Description	Remark	Qty	Model
	08/78-07/7941D	Cork D - MJ 1979>> - MJ 1979			
	08/79-07/8230B	blue D - MJ 1980>>			
	08/79-07/8250B	beige D - MJ 1980>>			
	08/80-07/8220S	Mint green D - MJ 1981>>			
	08/80-07/8260A	Grey D - MJ 1981>>			
	08/81-07/8280E	wine red D - MJ 1982>> - MJ 1982			
(2)	928 551 014 04	Flooring Carpet D - MJ 1979>>	right short	1	
	08/78-07/8270E	Black D - MJ 1979>>			
	08/78-07/7920E	green D - MJ 1979>> - MJ 1979			
	08/78-07/8240E	brown D - MJ 1979>>			
	08/78-07/7941D	Cork D - MJ 1979>> - MJ 1979			
	08/79-07/8230B	blue D - MJ 1980>>			
	08/79-07/8250B	beige D - MJ 1980>>			
	08/80-07/8220S	Mint green D - MJ 1981>>			
	08/80-07/8260A	Grey D - MJ 1981>>			
	08/81-07/8280E	wine red D - MJ 1982>> - MJ 1982			
(3)	928 551 031 02	Trim Side member Carpet D >> - MJ 1978	left lhd long	1	
	08/77-07/7820B	Dark green D - MJ 1978>> - MJ 1978			
	08/77-07/7840A	brown D - MJ 1978>> - MJ 1978			

Model	Year	MG	SG	Illustration	Restrictions	UPD	7:23	27.10.2023
928	1978	8	07	807-005		738		

Pos	Part Number	Description	Remark	Qty	Model
	08/77-07/7870A	Black D - MJ 1978>> - MJ 1978			
	08/77-07/7840D	Cork D - MJ 1978>> - MJ 1978			
3	928 551 032 02	Trim Side member Carpet D >> - MJ 1978	right lhd long	1	
	08/77-07/7820B	Dark green D - MJ 1978>> - MJ 1978			
	08/77-07/7840A	brown D - MJ 1978>> - MJ 1978			
	08/77-07/7870A	Black D - MJ 1978>> - MJ 1978			
	08/77-07/7840D	Cork D - MJ 1978>> - MJ 1978			
(3)	928 551 032 03	Trim Side member Carpet	right lhd long	1	
	08/77-07/8220B	Dark green			
	08/77-07/8240A	brown			
	08/77-07/8270A	Black			
	08/77-07/8240D	Cork			
(3)	927 551 031 02	Trim Side member Carpet D >> - MJ 1978	left rhd long	1	
	08/77-07/7820B	Dark green D - MJ 1978>> - MJ 1978			
	08/77-07/7840A	brown D - MJ 1978>> - MJ 1978			
	08/77-07/7870A	Black D - MJ 1978>> - MJ 1978			
	08/77-07/7840D	Cork D - MJ 1978>> - MJ 1978			
(3)	927 551 032 02	Trim Side member Carpet D >> - MJ 1978	right rhd long	1	
	08/77-07/7820B	Dark green D - MJ 1978>> - MJ 1978			

Model	Year	MG	SG	Illustration	Restrictions	UPD	7:23	27.10.2023
928	1978	8	07	807-005		738		

Pos	Part Number	Description	Remark	Qty	Model
	08/77-07/7840A	brown D - MJ 1978>> - MJ 1978			
	08/77-07/7870A	Black D - MJ 1978>> - MJ 1978			
	08/77-07/7840D	Cork D - MJ 1978>> - MJ 1978			
(3)	928 551 031 02	Trim Carpet D - MJ 1979>>	left lhd short	1	
	08/78-07/8270E	Black D - MJ 1979>>			
	08/78-07/7920E	green D - MJ 1979>> - MJ 1979			
	08/78-07/8240E	brown D - MJ 1979>>			
	08/78-07/7941D	Cork D - MJ 1979>> - MJ 1979			
	08/79-07/8230B	blue D - MJ 1980>>			
	08/79-07/8250B	beige D - MJ 1980>>			
	08/80-07/8220S	Mint green D - MJ 1981>>			
	08/80-07/8260A	Grey D - MJ 1981>>			
	08/81-07/8280E	wine red D - MJ 1982>> - MJ 1982			
3	928 551 032 02	Trim Carpet	right lhd short	1	
	08/78-07/8270E	Black D - MJ 1979>>			
	08/78-07/7920E	green D - MJ 1979>> - MJ 1979			
	08/78-07/8240E	brown D - MJ 1979>>			
	08/78-07/7941D	Cork D - MJ 1979>> - MJ 1979			
	08/79-07/8230B	blue D - MJ 1980>>			
	08/79-07/8250B	beige D - MJ 1980>>			

Model	Year	MG	SG	Illustration	Restrictions	UPD	7:23	27.10.2023
928	1978	8	07	807-005		738		

Pos	Part Number	Description	Remark	Qty	Model
	08/80-07/8220S	Mint green D - MJ 1981>>			
	08/80-07/8260A	Grey D - MJ 1981>>			
	08/77-07/8280E	wine red			
(3)	928 551 032 03	Trim Carpet	right lhd short	1	
	08/77-07/8270E	Black			
	08/77-07/8220E	green			
	08/77-07/8240E	brown			
	08/77-07/8241D	Cork			
	08/79-07/8230B	blue D - MJ 1980>>			
	08/79-07/8250B	beige D - MJ 1980>>			
	08/80-07/8220S	Mint green D - MJ 1981>>			
	08/80-07/8260A	Grey D - MJ 1981>>			
	08/81-07/8280E	wine red D - MJ 1982>> - MJ 1982			
(3)	927 551 031 02	Trim Carpet D - MJ 1979>>	left rhd short	1	
	08/78-07/8270E	Black D - MJ 1979>>			
	08/78-07/7920E	green D - MJ 1979>> - MJ 1979			
	08/78-07/8240E	brown D - MJ 1979>>			
	08/78-07/7941D	Cork D - MJ 1979>> - MJ 1979			
	08/79-07/8230B	blue D - MJ 1980>>			
	08/79-07/8250B	beige D - MJ 1980>>			
	08/80-07/8220S	Mint green D - MJ 1981>>			
	08/80-07/8260A	Grey D - MJ 1981>>			

Model	Year	MG	SG	Illustration	Restrictions	UPD	7:23	27.10.2023
928	1978	8	07	807-005		738		

Pos	Part Number	Description	Remark	Qty	Model
	08/81-07/8280E	wine red D - MJ 1982>> - MJ 1982			
(3)	927 551 032 02	Trim Carpet D - MJ 1979>>	right rhd short	1	
	08/78-07/8270E	Black D - MJ 1979>>			
	08/78-07/7920E	green D - MJ 1979>> - MJ 1979			
	08/78-07/8240E	brown D - MJ 1979>>			
	08/78-07/7941D	Cork D - MJ 1979>> - MJ 1979			
	08/79-07/8230B	blue D - MJ 1980>>			
	08/79-07/8250B	beige D - MJ 1980>>			
	08/80-07/8220S	Mint green D - MJ 1981>>			
	08/80-07/8260A	Grey D - MJ 1981>>			
	08/81-07/8280E	wine red D - MJ 1982>> - MJ 1982			
3A	928 551 505 03	Cover D - MJ 1980>>	lhd	1	
	08/79-07/8270E	Black			
	08/79-07/8230B	blue			
	08/79-07/8240E	brown			
	08/79-07/8250B	beige			
	08/80-07/8220S	Mint green D - MJ 1981>>			
	08/80-07/8260A	Grey D - MJ 1981>>			
	08/79-07/8280E	wine red			
(3A)	927 551 505 03	Cover D - MJ 1980>>	rhd	1	
	08/79-07/8270E	Black			
	08/79-07/8230B	blue			
	08/79-07/8240E	brown			

Model	Year	MG	SG	Illustration	Restrictions	UPD	7:23	27.10.2023
928	1978	8	07	807-005		738		

Pos	Part Number	Description	Remark	Qty	Model
	08/79-07/8250B	beige			
	08/80-07/8220S	Mint green D - MJ 1981>>			
	08/80-07/8260A	Grey D - MJ 1981>>			
	08/79-07/8280E	wine red			
4	928 551 057 02	Trim Heel plate Carpet D >> - MJ 1978	left lhd long	1	
	08/77-07/7820B	Dark green D - MJ 1978>> - MJ 1978			
	08/77-07/7840A	brown D - MJ 1978>> - MJ 1978			
	08/77-07/7870A	Black D - MJ 1978>> - MJ 1978			
	08/77-07/7840D	Cork D - MJ 1978>> - MJ 1978			
(4)	928 551 058 02	Trim Heel plate Carpet D >> - MJ 1978	right lhd long	1	
	08/77-07/7820B	Dark green D - MJ 1978>> - MJ 1978			
	08/77-07/7840A	brown D - MJ 1978>> - MJ 1978			
	08/77-07/7870A	Black D - MJ 1978>> - MJ 1978			
	08/77-07/7840D	Cork D - MJ 1978>> - MJ 1978			
4	927 551 057 02	Trim Heel plate Carpet D >> - MJ 1978	left rhd long	1	
	08/77-07/7820B	Dark green D - MJ 1978>> - MJ 1978			
	08/77-07/7840A	brown D - MJ 1978>> - MJ 1978			
	08/77-07/7870A	Black D - MJ 1978>> - MJ 1978			
	08/77-07/7840D	Cork D - MJ 1978>> - MJ 1978			

Model	Year	MG	SG	Illustration	Restrictions	UPD	7:23	27.10.2023
928	1978	8	07	807-005		738		

Pos	Part Number	Description	Remark	Qty	Model
(4)	927 551 058 02	Trim Heel plate Carpet D >> - MJ 1978	right rhd long	1	
	08/77-07/7820B	Dark green D - MJ 1978>> - MJ 1978			
	08/77-07/7840A	brown D - MJ 1978>> - MJ 1978			
	08/77-07/7870A	Black D - MJ 1978>> - MJ 1978			
	08/77-07/7840D	Cork D - MJ 1978>> - MJ 1978			
4	928 551 057 02	Trim Carpet	left lhd short	1	
	08/78-07/8270E	Black D - MJ 1979>>			
	08/78-07/7920E	green D - MJ 1979>> - MJ 1979			
	08/78-07/8240E	brown D - MJ 1979>>			
	08/78-07/7941D	Cork D - MJ 1979>> - MJ 1979			
	08/79-07/8230B	blue D - MJ 1980>>			
	08/79-07/8250B	beige D - MJ 1980>>			
	08/80-07/8220S	Mint green D - MJ 1981>>			
	08/80-07/8260A	Grey D - MJ 1981>>			
	08/77-07/8280E	wine red			
(4)	928 551 058 02	Trim Carpet	right lhd short	1	
	08/78-07/8270E	Black D - MJ 1979>>			
	08/78-07/7920E	green D - MJ 1979>> - MJ 1979			
	08/78-07/8240E	brown D - MJ 1979>>			
	08/78-07/7941D	Cork D - MJ 1979>> - MJ 1979			

Model	Year	MG	SG	Illustration	Restrictions	UPD	7:23	27.10.2023
928	1978	8	07	807-005		738		

Pos	Part Number	Description	Remark	Qty	Model
	08/79-07/8230B	blue D - MJ 1980>>			
	08/79-07/8250B	beige D - MJ 1980>>			
	08/80-07/8220S	Mint green D - MJ 1981>>			
	08/80-07/8260A	Grey D - MJ 1981>>			
	08/77-07/8280E	wine red			
4	927 551 057 02	Trim Carpet	left rhd short	1	
	08/78-07/8270E	Black D - MJ 1979>>			
	08/78-07/7920E	green D - MJ 1979>> - MJ 1979			
	08/78-07/8240E	brown D - MJ 1979>>			
	08/78-07/7941D	Cork D - MJ 1979>> - MJ 1979			
	08/79-07/8230B	blue D - MJ 1980>>			
	08/79-07/8250B	beige D - MJ 1980>>			
	08/80-07/8220S	Mint green D - MJ 1981>>			
	08/80-07/8260A	Grey D - MJ 1981>>			
	08/77-07/8280E	wine red			
(4)	927 551 058 02	Trim Carpet	right rhd short	1	
	08/78-07/8270E	Black D - MJ 1979>>			
	08/78-07/7920E	green D - MJ 1979>> - MJ 1979			
	08/78-07/8240E	brown D - MJ 1979>>			
	08/78-07/7941D	Cork D - MJ 1979>> - MJ 1979			
	08/79-07/8230B	blue D - MJ 1980>>			

Model	Year	MG	SG	Illustration	Restrictions	UPD	7:23	27.10.2023
928	1978	8	07	807-005		738		

Pos	Part Number	Description	Remark	Qty	Model
	08/79-07/8250B	beige D - MJ 1980>>			
	08/80-07/8220S	Mint green D - MJ 1981>>			
	08/80-07/8260A	Grey D - MJ 1981>>			
	08/77-07/8280E	wine red			
5	928 551 061 02	Luggage compartment floor Carpet D >> - MJ 1979	long	1	
	08/77-07/7820B	Dark green D - MJ 1978>> - MJ 1978			
	08/77-07/7840A	brown D - MJ 1978>> - MJ 1978			
	08/77-07/7870A	Black D - MJ 1978>> - MJ 1978			
	08/77-07/7840D	Cork Carpet D - MJ 1978>> - MJ 1978	short		
	08/78-07/7970E	Black D - MJ 1979>> - MJ 1979			
	08/78-07/7920E	green D - MJ 1979>> - MJ 1979			
	08/78-07/7940E	brown D - MJ 1979>> - MJ 1979			
	08/78-07/7941D	Cork D - MJ 1979>> - MJ 1979			
(5)	928 551 061 03	Luggage compartment floor Carpet D - MJ 1980>>	short	1	
	08/79-07/8270E	Black			
	08/79-07/8230B	blue			
	08/79-07/8240E	brown			
	08/79-07/8250B	beige			
	08/80-07/8220S	Mint green D - MJ 1981>>			
	08/80-07/8260A	Grey D - MJ 1981>>			
	08/79-07/8280E	wine red			
-	928 504 207 02	End cap		1	

Model	Year	MG	SG	Illustration	Restrictions	UPD	7:23	27.10.2023
928	1978	8	07	807-005		738		

Pos	Part Number	Description	Remark	Qty	Model
6	928 551 091 02	Trim for hand brake cable Carpet D >> - MJ 1978	lhd long	1	
	08/77-07/7820B	Dark green D - MJ 1978>> - MJ 1978			
	08/77-07/7840A	brown D - MJ 1978>> - MJ 1978			
	08/77-07/7870A	Black D - MJ 1978>> - MJ 1978			
	08/77-07/7840D	Cork D - MJ 1978>> - MJ 1978			
6	927 551 091 02	Trim for hand brake cable Carpet D >> - MJ 1978	rhd long	1	
	08/77-07/7820B	Dark green D - MJ 1978>> - MJ 1978			
	08/77-07/7840A	brown D - MJ 1978>> - MJ 1978			
	08/77-07/7870A	Black D - MJ 1978>> - MJ 1978			
	08/77-07/7840D	Cork D - MJ 1978>> - MJ 1978			
6	928 551 091 02	Trim Carpet	lhd short	1	
	08/78-07/8270E	Black D - MJ 1979>>			
	08/78-07/7920E	green D - MJ 1979>> - MJ 1979			
	08/78-07/8240E	brown D - MJ 1979>>			
	08/78-07/7941D	Cork D - MJ 1979>> - MJ 1979			
	08/79-07/8230B	blue D - MJ 1980>>			
	08/79-07/8250B	beige D - MJ 1980>>			
	08/80-07/8220S	Mint green D - MJ 1981>>			
	08/80-07/8260A	Grey D - MJ 1981>>			

Model	Year	MG	SG	Illustration	Restrictions	UPD	7:23	27.10.2023
928	1978	8	07	807-005		738		

Pos	Part Number	Description	Remark	Qty	Model
	08/77-07/8280E	wine red			
6	927 551 091 02	Trim Carpet	rhd short	1	
	08/78-07/8270E	Black D - MJ 1979>>			
	08/78-07/7920E	green D - MJ 1979>> - MJ 1979			
	08/78-07/8240E	brown D - MJ 1979>>			
	08/78-07/7941D	Cork D - MJ 1979>> - MJ 1979			
	08/79-07/8230B	blue D - MJ 1980>>			
	08/79-07/8250B	beige D - MJ 1980>>			
	08/80-07/8220S	Mint green D - MJ 1981>>			
	08/80-07/8260A	Grey D - MJ 1981>>			
	08/77-07/8280E	wine red			
7	928 551 089 04	Trim handbrake Carpet D >> - MJ 1978	lhd long	1	
	08/77-07/7820B	Dark green D - MJ 1978>> - MJ 1978			
	08/77-07/7840A	brown D - MJ 1978>> - MJ 1978			
	08/77-07/7870A	Black D - MJ 1978>> - MJ 1978			
	08/77-07/7840D	Cork D - MJ 1978>> - MJ 1978			
7	927 551 089 04	Trim handbrake Carpet D >> - MJ 1978	rhd long	1	
	08/77-07/7820B	Dark green D - MJ 1978>> - MJ 1978			
	08/77-07/7840A	brown D - MJ 1978>> - MJ 1978			
	08/77-07/7870A	Black D - MJ 1978>> - MJ 1978			

Model	Year	MG	SG	Illustration	Restrictions	UPD	7:23	27.10.2023
928	1978	8	07	807-005		738		

Pos	Part Number	Description	Remark	Qty	Model
	08/77-07/7840D	Cork D - MJ 1978>> - MJ 1978			
7	928 551 089 04	Trim Carpet D - MJ 1979>>	lhd short	1	
	08/78-07/8270E	Black D - MJ 1979>>			
	08/78-07/7920E	green D - MJ 1979>> - MJ 1979			
	08/78-07/8240E	brown D - MJ 1979>>			
	08/78-07/7941D	Cork D - MJ 1979>> - MJ 1979			
	08/79-07/8230B	blue D - MJ 1980>>			
	08/79-07/8250B	beige D - MJ 1980>>			
	08/80-07/8220S	Mint green D - MJ 1981>>			
	08/80-07/8260A	Grey D - MJ 1981>>			
	08/81-07/8280E	wine red D - MJ 1982>> - MJ 1982			
7	927 551 089 04	Trim Carpet D - MJ 1979>>	rhd short	1	
	08/78-07/8270E	Black D - MJ 1979>>			
	08/78-07/7920E	green D - MJ 1979>> - MJ 1979			
	08/78-07/8240E	brown D - MJ 1979>>			
	08/78-07/7941D	Cork D - MJ 1979>> - MJ 1979			
	08/79-07/8230B	blue D - MJ 1980>>			
	08/79-07/8250B	beige D - MJ 1980>>			
	08/80-07/8220S	Mint green D - MJ 1981>>			
	08/80-07/8260A	Grey D - MJ 1981>>			

Model	Year	MG	SG	Illustration	Restrictions	UPD	7:23	27.10.2023
928	1978	8	07	807-005		738		

Pos	Part Number	Description	Remark	Qty	Model
	08/81-07/8280E	wine red D - MJ 1982>> - MJ 1982			
8	928 551 113 02	Trim tunnel Carpet D >> - MJ 1978	long	1	
	08/77-07/7820B	Dark green D - MJ 1978>> - MJ 1978			
	08/77-07/7840A	brown D - MJ 1978>> - MJ 1978			
	08/77-07/7870A	Black D - MJ 1978>> - MJ 1978			
	08/77-07/7840D	Cork D - MJ 1978>> - MJ 1978			
8	928 551 113 03	Trim tunnel Carpet D >> - MJ 1978	AUT. long	1	
	08/77-07/7820B	Dark green D - MJ 1978>> - MJ 1978			
	08/77-07/7840A	brown D - MJ 1978>> - MJ 1978			
	08/77-07/7870A	Black D - MJ 1978>> - MJ 1978			
	08/77-07/7840D	Cork D - MJ 1978>> - MJ 1978			
8	928 551 113 02	Trim Carpet D - MJ 1979>>	short	1	
	08/78-07/8270E	Black D - MJ 1979>>			
	08/78-07/7920E	green D - MJ 1979>> - MJ 1979			
	08/78-07/8240E	brown D - MJ 1979>>			
	08/78-07/7941D	Cork D - MJ 1979>> - MJ 1979			
	08/79-07/8230B	blue D - MJ 1980>>			
	08/79-07/8250B	beige D - MJ 1980>>			
	08/80-07/8220S	Mint green D - MJ 1981>>			

Model	Year	MG	SG	Illustration	Restrictions	UPD	7:23	27.10.2023
928	1978	8	07	807-005		738		

Pos	Part Number	Description	Remark	Qty	Model
	08/80-07/8260A	Grey D - MJ 1981>>			
	08/81-07/8280E	wine red D - MJ 1982>> - MJ 1982			
8	928 551 113 03	Trim Carpet D - MJ 1979>>	AUT. short	1	
	08/78-07/8270E	Black D - MJ 1979>>			
	08/78-07/7920E	green D - MJ 1979>> - MJ 1979			
	08/78-07/8240E	brown D - MJ 1979>>			
	08/78-07/7941D	Cork D - MJ 1979>> - MJ 1979			
	08/79-07/8230B	blue D - MJ 1980>>			
	08/79-07/8250B	beige D - MJ 1980>>			
	08/80-07/8220S	Mint green D - MJ 1981>>			
	08/80-07/8260A	Grey D - MJ 1981>>			
	08/81-07/8280E	wine red D - MJ 1982>> - MJ 1982			
9	928 551 049 02	Trim Firewall Carpet D >> - MJ 1978	lhd long	1	
	08/77-07/7820B	Dark green D - MJ 1978>> - MJ 1978			
	08/77-07/7840A	brown D - MJ 1978>> - MJ 1978			
	08/77-07/7870A	Black D - MJ 1978>> - MJ 1978			
	08/77-07/7840D	Cork D - MJ 1978>> - MJ 1978			
(9)	927 551 050 02	Trim Firewall Carpet D >> - MJ 1978	rhd long	1	
	08/77-07/7820B	Dark green D - MJ 1978>> - MJ 1978			

Model	Year	MG	SG	Illustration	Restrictions	UPD	7:23	27.10.2023
928	1978	8	07	807-005		738		

Pos	Part Number	Description	Remark	Qty	Model
	08/77-07/7840A	brown D - MJ 1978>> - MJ 1978			
	08/77-07/7870A	Black D - MJ 1978>> - MJ 1978			
	08/77-07/7840D	Cork D - MJ 1978>> - MJ 1978			
9	928 551 049 02	Trim Carpet D - MJ 1979>>	lhd short	1	
	08/78-07/8270E	Black D - MJ 1979>>			
	08/78-07/7920E	green D - MJ 1979>> - MJ 1979			
	08/78-07/8240E	brown D - MJ 1979>>			
	08/78-07/7941D	Cork D - MJ 1979>> - MJ 1979			
	08/79-07/8230B	blue D - MJ 1980>>			
	08/79-07/8250B	beige D - MJ 1980>>			
	08/80-07/8220S	Mint green D - MJ 1981>>			
	08/80-07/8260A	Grey D - MJ 1981>>			
	08/81-07/8280E	wine red D - MJ 1982>> - MJ 1982			
(9)	927 551 050 02	Trim Carpet D - MJ 1979>>	rhd short	1	
	08/78-07/8270E	Black D - MJ 1979>>			
	08/78-07/7920E	green D - MJ 1979>> - MJ 1979			
	08/78-07/8240E	brown D - MJ 1979>>			
	08/78-07/7941D	Cork D - MJ 1979>> - MJ 1979			
	08/79-07/8230B	blue D - MJ 1980>>			
	08/79-07/8250B	beige D - MJ 1980>>			

Model	Year	MG	SG	Illustration	Restrictions	UPD	7:23	27.10.2023
928	1978	8	07	807-005		738		

Pos	Part Number	Description	Remark	Qty	Model
	08/80-07/8220S	Mint green D - MJ 1981>>			
	08/80-07/8260A	Grey D - MJ 1981>>			
	08/81-07/8280E	wine red D - MJ 1982>> - MJ 1982			
9A	928 551 062 02	Foot rest D >> - MJ 1979	lhd	1	
(9A)	927 799 551 07	Foot rest Discontinued part	rhd	1	
9A	927 799 551 07	Foot rest	rhd	1	
(9B)	928 799 551 10	Foot rest D - MJ 1980>> Discontinued part	lhd	1	
9B	928 799 551 10	Foot rest Upper part D - MJ 1980>>	lhd	1	
(9C)	928 551 066 02	Foot rest Lower part D - MJ 1980>>	lhd	1	
-	928 551 351 02	Hinge		2	
-	900 143 113 07	fillister hd. bolt B 4,2 X 13 Discontinued part		8	
-	900 143 113 0G	fillister hd. bolt B 4,2 X 13		8	
10	928 551 069 02	Trim first aid kit Carpet D >> - MJ 1978	lhd long	1	
	08/77-07/7820B	Dark green D - MJ 1978>> - MJ 1978			
	08/77-07/7840A	brown D - MJ 1978>> - MJ 1978			
	08/77-07/7870A	Black D - MJ 1978>> - MJ 1978			
	08/77-07/7840D	Cork D - MJ 1978>> - MJ 1978			
(10)	927 551 069 02	Trim first aid kit Carpet D >> - MJ 1978	rhd long	1	

Model	Year	MG	SG	Illustration	Restrictions	UPD	7:23	27.10.2023
928	1978	8	07	807-005		738		

Pos	Part Number	Description	Remark	Qty	Model
	08/77-07/7820B	Dark green D - MJ 1978>> - MJ 1978			
	08/77-07/7840A	brown D - MJ 1978>> - MJ 1978			
	08/77-07/7870A	Black D - MJ 1978>> - MJ 1978			
	08/77-07/7840D	Cork D - MJ 1978>> - MJ 1978			
10	928 551 069 02	Trim Carpet D - MJ 1979>>	lhd short	1	
	08/78-07/8270E	Black D - MJ 1979>>			
	08/78-07/8220E	green D - MJ 1979>>			
	08/78-07/8240E	brown D - MJ 1979>>			
	08/78-07/7941D	Cork D - MJ 1979>> - MJ 1979			
	08/79-07/8230B	blue D - MJ 1980>>			
	08/79-07/8250B	beige D - MJ 1980>>			
	08/80-07/8220S	Mint green D - MJ 1981>>			
	08/80-07/8260A	Grey D - MJ 1981>>			
	08/81-07/8280E	wine red D - MJ 1982>> - MJ 1982			
(10)	927 551 069 02	Trim Carpet D - MJ 1979>>	rhd short	1	
	08/78-07/8270E	Black D - MJ 1979>>			
	08/78-07/8220E	green D - MJ 1979>>			
	08/78-07/8240E	brown D - MJ 1979>>			
	08/78-07/7941D	Cork D - MJ 1979>> - MJ 1979			
	08/79-07/8230B	blue D - MJ 1980>>			

Model	Year	MG	SG	Illustration	Restrictions	UPD	7:23	27.10.2023
928	1978	8	07	807-005		738		

Pos	Part Number	Description	Remark	Qty	Model
	08/79-07/8250B	beige D - MJ 1980>>			
	08/80-07/8220S	Mint green D - MJ 1981>>			
	08/80-07/8260A	Grey D - MJ 1981>>			
	08/81-07/8280E	wine red D - MJ 1982>> - MJ 1982			
-	928 551 087 02	strap first aid kit		1	
11	928 551 035 02	Trim Foot rest Carpet D >> - MJ 1978	lhd long	1	
	08/77-07/7820B	Dark green D - MJ 1978>> - MJ 1978			
	08/77-07/7840A	brown D - MJ 1978>> - MJ 1978			
	08/77-07/7870A	Black D - MJ 1978>> - MJ 1978			
	08/77-07/7840D	Cork D - MJ 1978>> - MJ 1978			
(11)	927 551 036 02	Trim Foot rest Carpet D >> - MJ 1978	rhd long	1	
	08/77-07/7820B	Dark green D - MJ 1978>> - MJ 1978			
	08/77-07/7840A	brown D - MJ 1978>> - MJ 1978			
	08/77-07/7870A	Black D - MJ 1978>> - MJ 1978			
	08/77-07/7840D	Cork D - MJ 1978>> - MJ 1978			
11	928 551 035 02	Trim Carpet D - MJ 1979>>	lhd short	1	
	08/78-07/8270E	Black D - MJ 1979>>			
	08/78-07/7920E	green D - MJ 1979>> - MJ 1979			
	08/78-07/8240E	brown D - MJ 1979>>			

Model	Year	MG	SG	Illustration	Restrictions	UPD	7:23	27.10.2023
928	1978	8	07	807-005		738		

Pos	Part Number	Description	Remark	Qty	Model
	08/78-07/7941D	Cork D - MJ 1979>> - MJ 1979			
	08/79-07/8230B	blue D - MJ 1980>>			
	08/79-07/8250B	beige D - MJ 1980>>			
	08/80-07/8220S	Mint green D - MJ 1981>>			
	08/80-07/8260A	Grey D - MJ 1981>>			
	08/81-07/8280E	wine red D - MJ 1982>> - MJ 1982			
(11)	927 551 036 02	Trim Carpet D - MJ 1979>>	rhd short	1	
	08/78-07/8270E	Black D - MJ 1979>>			
	08/78-07/7920E	green D - MJ 1979>> - MJ 1979			
	08/78-07/8240E	brown D - MJ 1979>>			
	08/78-07/7941D	Cork D - MJ 1979>> - MJ 1979			
	08/79-07/8230B	blue D - MJ 1980>>			
	08/79-07/8250B	beige D - MJ 1980>>			
	08/80-07/8220S	Mint green D - MJ 1981>>			
	08/80-07/8260A	Grey D - MJ 1981>>			
	08/81-07/8280E	wine red D - MJ 1982>> - MJ 1982			
12	928 551 081 03	Cover plate Leatherette D >> - MJ 1979		1	
	08/77-07/7920B	Dark green			
	08/77-07/7921S	brown			
	08/77-07/7905T	Black			
	08/77-07/7940D	Cork			

Model	Year	MG	SG	Illustration	Restrictions	UPD	7:23	27.10.2023
928	1978	8	07	807-005		738		

Pos	Part Number	Description	Remark	Qty	Model
(12)	928 551 081 04	Cover plate without: Rear window wiper Carpet D - MJ 1980>>		1	
	08/79-07/8270E	Black			
	08/79-07/8240E	brown			
	08/79-07/8230B	blue			
	08/79-07/8250B	beige			
	08/80-07/8220S	Mint green D - MJ 1981>>			
	08/80-07/8260A	Grey D - MJ 1981>>			
(12)	928 551 081 05	Cover plate with: Rear window wiper Leatherette D - MJ 1980>>		1	
	08/79-07/8205T	Black			
	08/79-07/8230B	blue			
	08/79-07/8221S	brown Carpet			
	08/80-07/8270E	Black D - MJ 1981>>			
	08/80-07/8230B	blue D - MJ 1981>>			
	08/80-07/8240E	brown D - MJ 1981>>			
	08/80-07/8250B	beige D - MJ 1981>>			
	08/80-07/8220S	Mint green D - MJ 1981>>			
	08/80-07/8260A	Grey D - MJ 1981>>			
	08/81-07/8280E	wine red D - MJ 1982>> - MJ 1982			
-	928 551 653 02	Trim Cross panel D - MJ 1980>>		1	
	08/79-07/8270E	Black			
	08/79-07/8230B	blue			

Model	Year	MG	SG	Illustration	Restrictions	UPD	7:23	27.10.2023
928	1978	8	07	807-005		738		

Pos	Part Number	Description	Remark	Qty	Model
	08/79-07/8240E	brown			
	08/79-07/8250B	beige			
	08/80-07/8220S	Mint green D - MJ 1981>>			
	08/80-07/8260A	Grey D - MJ 1981>>			
	08/81-07/8280E	wine red D - MJ 1982>> - MJ 1982			
12A	928 551 187 02	Locking bar D >> - MJ 1979		2	
12B	900 190 022 03	Button-head rivet D >> - MJ 1979		2	
13	928 551 137 02	Impact protection	lhd	1	
14	928 551 145 02	Trim frame for seat Carpet D >> - MJ 1978	left long	1	
	08/77-07/7820B	Dark green D - MJ 1978>> - MJ 1978			
	08/77-07/7840A	brown D - MJ 1978>> - MJ 1978			
	08/77-07/7870A	Black D - MJ 1978>> - MJ 1978			
	08/77-07/7840D	Cork D - MJ 1978>> - MJ 1978			
(14)	928 551 146 02	Trim frame for seat Carpet D >> - MJ 1978	right long	1	
	08/77-07/7820B	Dark green D - MJ 1978>> - MJ 1978			
	08/77-07/7840A	brown D - MJ 1978>> - MJ 1978			
	08/77-07/7870A	Black D - MJ 1978>> - MJ 1978			
	08/77-07/7840D	Cork D - MJ 1978>> - MJ 1978			
14	928 551 145 02	Trim Carpet D - MJ 1979>>	left short	1	
	08/78-07/8270E	Black D - MJ 1979>>			

Model	Year	MG	SG	Illustration	Restrictions	UPD	7:23	27.10.2023
928	1978	8	07	807-005		738		

Pos	Part Number	Description	Remark	Qty	Model
	08/78-07/7920E	green D - MJ 1979>> - MJ 1979			
	08/78-07/8240E	brown D - MJ 1979>>			
	08/78-07/7941D	Cork D - MJ 1979>> - MJ 1979			
	08/79-07/8230B	blue D - MJ 1980>>			
	08/79-07/8250B	beige D - MJ 1980>>			
	08/80-07/8220S	Mint green D - MJ 1981>>			
	08/80-07/8260A	Grey D - MJ 1981>>			
	08/81-07/8280E	wine red D - MJ 1982>> - MJ 1982			
(14)	928 551 146 02	Trim Carpet D - MJ 1979>>	right short	1	
	08/78-07/8270E	Black D - MJ 1979>>			
	08/78-07/7920E	green D - MJ 1979>> - MJ 1979			
	08/78-07/8240E	brown D - MJ 1979>>			
	08/78-07/7941D	Cork D - MJ 1979>> - MJ 1979			
	08/79-07/8230B	blue D - MJ 1980>>			
	08/79-07/8250B	beige D - MJ 1980>>			
	08/80-07/8220S	Mint green D - MJ 1981>>			
	08/80-07/8260A	Grey D - MJ 1981>>			
	08/81-07/8280E	wine red D - MJ 1982>> - MJ 1982			
16	928 555 021 02	Trim Leatherette D >> - MJ 1978 Discontinued part	left lhd	1	
	08/77-07/7820B	Dark green			

Model	Year	MG	SG	Illustration	Restrictions	UPD	7:23	27.10.2023
928	1978	8	07	807-005		738		

Pos	Part Number	Description	Remark	Qty	Model
	08/77-07/7821S	brown			
	08/77-07/7805T	Black			
	08/77-07/7840D	Cork			
(16)	928 555 021 03	Side panel trim Leatherette D >> - MJ 1979	left lhd	1	
	08/77-07/7920B	Dark green			
	08/77-07/7921S	brown			
	08/77-07/7905T	Black			
	08/77-07/7940D	Cork			
(16)	928 555 022 02	Trim Leatherette D >> - MJ 1978 Discontinued part	right	1	
	08/77-07/7820B	Dark green			
	08/77-07/7821S	brown			
	08/77-07/7805T	Black			
	08/77-07/7840D	Cork			
(16)	928 555 022 03	Side panel trim Leatherette D >> - MJ 1979	right	1	
	08/77-07/7920B	Dark green			
	08/77-07/7921S	brown			
	08/77-07/7905T	Black			
	08/77-07/7940D	Cork			
(16)	927 555 021 03	Side panel trim Leatherette D >> - MJ 1979	left rhd	1	
	08/77-07/7920B	Dark green			
	08/77-07/7921S	brown			
	08/77-07/7905T	Black			
	08/77-07/7940D	Cork			
(16)	928 555 021 04	Side panel trim for vehicles with loudspeaker Leatherette D - MJ 1980>>	left lhd	1	

Model	Year	MG	SG	Illustration	Restrictions	UPD	7:23	27.10.2023
928	1978	8	07	807-005		738		

Pos	Part Number	Description	Remark	Qty	Model
	08/79-07/8205T	Black			
	08/79-07/8230B	blue			
	08/79-07/8221S	brown			
	08/79-07/8250B	beige			
(16)	928 555 022 04	Side trim (leatherette) for vehicles with loudspeaker Leatherette D - MJ 1980>>	right	1	
	08/79-07/8205T	Black			
	08/79-07/8230B	blue			
	08/79-07/8221S	brown			
	08/79-07/8250B	beige			
(16)	927 555 021 04	Side trim (leatherette) for vehicles with loudspeaker Leatherette D - MJ 1980>>	left rhd	1	
	08/79-07/8205T	Black			
	08/79-07/8230B	blue			
	08/79-07/8221S	brown			
	08/79-07/8250B	beige			
(16)	928 555 021 50	Side panel trim Leather D >> - MJ 1978	left lhd	1	
	08/77-07/7820B	Dark green			
	08/77-07/783NG	brown			
	08/77-07/781AJ	Black			
	08/77-07/7840D	Cork			
(16)	928 555 021 51	Side panel trim (leather) D >> - MJ 1979	left lhd	1	
	08/77-07/7920B	Dark green			
	08/77-07/793NG	brown			
	08/77-07/791AJ	Black			
	08/77-07/7940D	Cork			

Model	Year	MG	SG	Illustration	Restrictions	UPD	7:23	27.10.2023
928	1978	8	07	807-005		738		

Pos	Part Number	Description	Remark	Qty	Model
(16)	928 555 022 50	Trim Leather D >> - MJ 1978 Discontinued part	right	1	
	08/77-07/7820B	Dark green			
	08/77-07/783NG	brown			
	08/77-07/781AJ	Black			
	08/77-07/7840D	Cork			
(16)	927 555 021 51	Side panel trim (leather) D >> - MJ 1979	left rhd	1	
	08/77-07/7920B	Dark green			
	08/77-07/793NG	brown			
	08/77-07/791AJ	Black			
	08/77-07/7940D	Cork			
(16)	928 555 021 52	Side panel trim (leather) for vehicles with loudspeaker D - MJ 1980>>	left lhd	1	
	08/79-07/821AJ	Black			
	08/79-07/8230B	blue			
	08/79-07/823NG	brown			
	08/79-07/8250B	beige			
	08/79-07/8260S	Hannibal grey			
	08/79-07/8220S	Mint green			
	08/81-07/822LB	wine red D - MJ 1982>> - MJ 1982			
(16)	928 555 022 52	Side panel trim for vehicles with loudspeaker Leather D - MJ 1980>>	right	1	
	08/79-07/821AJ	Black			
	08/79-07/8230B	blue			
	08/79-07/823NG	brown			
	08/79-07/8250B	beige			
	08/79-07/8260S	Hannibal grey			
	08/79-07/8220S	Mint green			

Model	Year	MG	SG	Illustration	Restrictions	UPD	7:23	27.10.2023
928	1978	8	07	807-005		738		

Pos	Part Number	Description	Remark	Qty	Model
	08/81-07/822LB	wine red D - MJ 1982>> - MJ 1982			
(16)	927 555 021 52	Side panel trim (leather) for vehicles with loudspeaker D - MJ 1980>>	left rhd	1	
	08/79-07/821AJ	Black			
	08/79-07/8230B	blue			
	08/79-07/823NG	brown			
	08/79-07/8250B	beige			
	08/79-07/8260S	Hannibal grey			
	08/79-07/8220S	Mint green			
	08/81-07/822LB	wine red D - MJ 1982>> - MJ 1982			
16A	928 555 275 02	Rosette D >> - MJ 1979	left	1	
(16A)	928 555 275 03	Rosette D - MJ 1980>> Discontinued part	left	1	
(16A)	928 555 275 04	Rosette D - MJ 1980>>	left	1	
	08/79-07/8270B	Black			
(16A)	928 555 276 02	Rosette D >> - MJ 1979	right	1	
(16A)	928 555 276 03	Rosette D - MJ 1980>> Discontinued part	right	1	
(16A)	928 555 276 04	Rosette D - MJ 1980>>	right	1	
	08/79-07/8270B	Black			
16B	900 143 007 02	oval head panel screw B 4,2 X 13 Discontinued part		4	
16B	900 073 507 01	oval head panel screw B 4,2 X 13		4	
-	928 555 271 02	Clip D - MJ 1978>> - MJ 1978		6	
17	928 555 289 02	Cap D >> - MJ 1981	left	1	

Model	Year	MG	SG	Illustration	Restrictions	UPD	7:23	27.10.2023
928	1978	8	07	807-005		738		

Pos	Part Number	Description	Remark	Qty	Model
(17)	928 555 290 02	Cover cap D >> - MJ 1981	right	1	
17A	928 555 291 02	Bracket D >> - MJ 1981	left	1	
17A	928 555 292 02	Bracket D >> - MJ 1981	right	1	
18	928 555 203 02	Grab handle D >> - MJ 1981	left	1	
(18)	928 555 204 02	Grab handle D >> - MJ 1981	right	1	
19	928 556 045 02	Cover plate for spare wheel well		1	
-	171 860 273 A	retaining strap for first aid kit		1	
20	928 551 185 02	Stop buffer	left	1	
(20)	928 551 186 02	Stop buffer	right	1	
21	928 504 105 02	Seal cover for battery		1	
22	928 504 107 02	Rubber seal cover for battery		1	
-	928 555 631 02	Luggage net D - MJ 1980>>		1	
-	928 555 631 03	Luggage net		1	
(23)	928 555 701 05	Cassette box Leatherette D - MJ 1980>>	lhd	1	
	08/79-07/8205T	Black			
	08/79-07/8230B	blue			
	08/79-07/8221S	brown			
	08/79-07/8250B	beige			
(23)	927 555 701 05	Cassette box Leatherette D - MJ 1980>>	rhd	1	
	08/79-07/8205T	Black			
	08/79-07/8230B	blue			
	08/79-07/8221S	brown			
	08/79-07/8250B	beige			

Model	Year	MG	SG	Illustration	Restrictions	UPD	7:23	27.10.2023
928	1978	8	07	807-005		738		

Pos	Part Number	Description	Remark	Qty	Model
(23)	928 555 701 53	Cassette box Leather D - MJ 1980>>	lhd	1	
	08/79-07/821AJ	Black			
	08/79-07/8230B	blue			
	08/79-07/823NG	brown			
	08/79-07/8260S	Hannibal grey			
	08/79-07/8220S	Mint green			
(23)	927 555 701 53	Cassette box Leather D - MJ 1980>>	rhd	1	
	08/79-07/821AJ	Black			
	08/79-07/8230B	blue			
	08/79-07/823NG	brown			
	08/79-07/8260S	Hannibal grey			
	08/79-07/8220S	Mint green			
-	928 555 729 02	Insert D - MJ 1980>> - MJ 1980 Discontinued part		1	
-	928 555 729 03	Insert for Cassette box D - MJ 1980>>		1	
	08/79-07/8201C	Black			
-	928 555 731 02	Cassette holder and cassettes D - MJ 1980>>		8	
	08/79-07/8201C	Black			
-	928 555 741 02	partition D - MJ 1980>>		1	
-	900 143 065 07	panel screw 2,9 X 9,5 D - MJ 1980>> Discontinued part		14	
-	900 073 003 01	panel screw 2,9 X 9,5 D - MJ 1980>>		14	
-	999 450 001 07	flat round head bolt 4,2 X 25		4	
24	928 551 199 02	Cap closure D - MJ 1980>>		2	

Model	Year	MG	SG	Illustration	Restrictions	UPD	7:23	27.10.2023
928	1978	8	07	807-005		738		

Pos	Part Number	Description	Remark	Qty	Model
25	928 551 203 02	Lock bearing D - MJ 1980>>		2	
26	928 551 221 02	knob D - MJ 1980>>		2	
27	999 591 483 40	Retaining washer D - MJ 1980>>		2	
28	928 555 777 02	flexible lock D - MJ 1980>>		4	
29	999 591 484 02	Clamping washer D - MJ 1980>>		4	
30	927 551 073 03	arm D >> - MJ 1980	rhd	2	
30	927 551 073 03	arm D - MJ 1981>> Discontinued part	rhd	2	
30	927 551 073 03	arm	rhd	1	
30	928 551 073 04	arm Discontinued part	lhd	2	
30	928 551 073 04	arm	lhd	1	
-	928 551 911 00	Floor mat with: inscription 928 Discontinued part	left	1	
	08/77-07/8240A	brown			
	08/77-07/8270A	Black			
-	928 551 912 00	Floor mat with: inscription 928 Discontinued part	right	1	
	08/77-07/8240A	brown			
	08/77-07/8270A	Black			
-	000 043 087 00	1 set foot mats	lhd	X 2	
	08/77-07/8270E	Black			
	08/77-07/823KF	blue			
	08/77-07/825MF	brown			
	08/77-07/8280E	wine red			
	08/77-07/8260A	Grey			

Model	Year	MG	SG	Illustration	Restrictions	UPD	7:23	27.10.2023
928	1978	8	07	807-005		738		

Pos	Part Number	Description	Remark	Qty	Model
31	928 555 469 03	knob Coat hook D - MJ 1982>> - MJ 1982		2	
32	900 145 091 07	panel screw B 4,8 X 32 D - MJ 1982>> - MJ 1982		2	
33	999 591 102 07	Plastic washer 3,5 D - MJ 1982>> - MJ 1982		2	
34	900 145 062 07	panel screw B 3,5 X 25 D - MJ 1982>> - MJ 1982		2	
35	928 555 615 02	spacer bush		8	
36	477 885 761	Retaining bar		4	
37	900 269 050 07	countersunk bolt M 5 X 25		4	
38	N 012 406 2	Retaining washer 6 X 0,7		2	
39	900 253 005 07	knurled screw M 6 X 10		2	

Model	Year	MG	SG	Illustration	Restrictions	UPD	7:23	27.10.2023
928	1978	8	07	807-010		738		

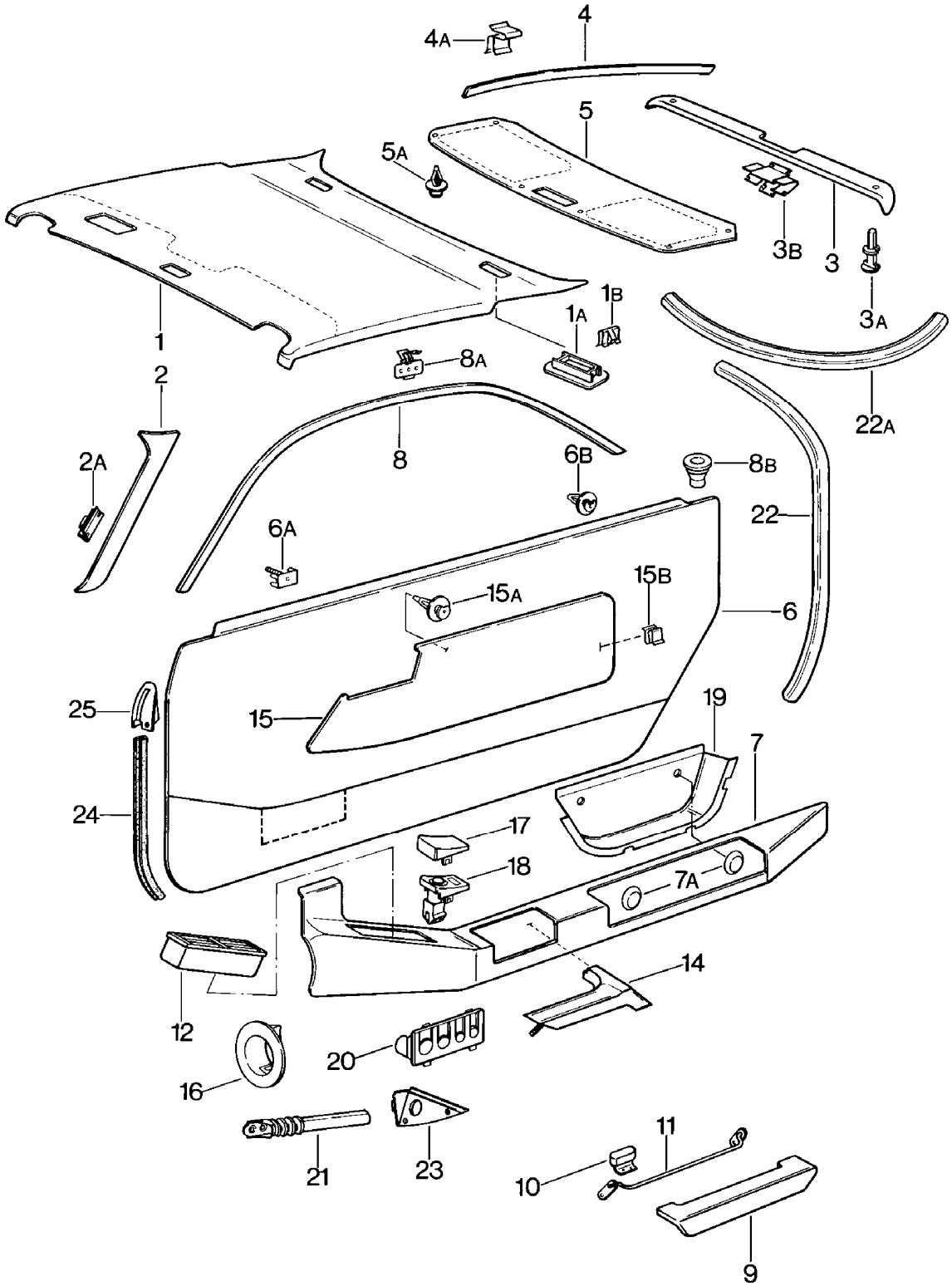

Model	Year	MG	SG	Illustration	Restrictions	UPD	7:23	27.10.2023
928	1978	8	07	807-010		738		

Pos	Part Number	Description	Remark	Qty	Model
		door panel roof trim			
1	928 555 071 02	roof trim	lhd	1	
	08/77-07/8220B	Dark green			
	08/77-07/8240A	brown			
	08/77-07/8270A	Black			
	08/77-07/8240D	Cork			
	08/77-07/8230B	blue			
(1)	927 555 071 02	roof trim	rhd	1	
	08/77-07/8220B	Dark green			
	08/77-07/8240A	brown			
	08/77-07/8270A	Black			
	08/77-07/8240D	Cork			
	08/77-07/8230B	blue			
(1)	928 555 071 03	roof trim for cars without Make-up mirror, illuminated Leatherette	lhd	1	
	08/77-07/8240A	brown			
	08/77-07/8270A	Black			
	08/77-07/8230B	blue			
(1)	927 555 071 03	roof trim for cars without Make-up mirror, illuminated Leatherette	rhd	1	
	08/77-07/8240A	brown			
	08/77-07/8270A	Black			
	08/77-07/8230B	blue			
(1)	928 555 071 50	roof trim Leather	lhd	1	
	08/77-07/8220B	Dark green			
	08/77-07/823NG	brown			
	08/77-07/821AJ	Black			
	08/77-07/8240D	Cork			
	08/77-07/8230B	blue			

Model	Year	MG	SG	Illustration	Restrictions	UPD	7:23	27.10.2023
928	1978	8	07	807-010		738		

Pos	Part Number	Description	Remark	Qty	Model
	08/77-07/8260S	Hannibal grey			
	08/77-07/8220S	Mint green			
	08/81-07/822LB	wine red D - MJ 1982>> - MJ 1982			
(1)	927 555 071 50	roof trim Leather	rhd	1	
	08/77-07/8220B	Dark green			
	08/77-07/823NG	brown			
	08/77-07/821AJ	Black			
	08/77-07/8240D	Cork			
	08/77-07/8230B	blue			
	08/77-07/8260S	Hannibal grey			
	08/77-07/8220S	Mint green			
	08/81-07/822LB	wine red D - MJ 1982>> - MJ 1982			
1A	928 555 355 02	Cover cap		2	
1B	928 555 365 03	Spring clip		4	
(2)	928 555 073 02	Trim windshield frame Leatherette	left	1	
	08/77-07/8220B	Dark green			
	08/77-07/8240A	brown			
	08/77-07/8270A	Black			
	08/77-07/8240D	Cork			
	08/77-07/8230B	blue			
2	928 555 074 02	Trim windshield frame Leatherette	right	1	
	08/77-07/8220B	Dark green			
	08/77-07/8240A	brown			
	08/77-07/8270A	Black			
	08/77-07/8240D	Cork			
	08/77-07/8230B	blue			

Model	Year	MG	SG	Illustration	Restrictions	UPD	7:23	27.10.2023
928	1978	8	07	807-010		738		

Pos	Part Number	Description	Remark	Qty	Model
2	928 555 251 50	Trim windshield frame Leather	left	1	
	08/77-07/8220B	Dark green			
	08/77-07/8240D	Cork			
	08/77-07/821AJ	Black			
	08/77-07/8230B	blue			
	08/77-07/823NG	brown			
	08/77-07/8260S	Hannibal grey			
	08/77-07/8220S	Mint green			
	08/81-07/822LB	wine red D - MJ 1982>> - MJ 1982			
2	928 555 252 50	Trim windshield frame Leather	right	1	
	08/77-07/8220B	Dark green			
	08/77-07/8240D	Cork			
	08/77-07/821AJ	Black			
	08/77-07/8230B	blue			
	08/77-07/823NG	brown			
	08/77-07/8260S	Hannibal grey			
	08/77-07/8220S	Mint green			
	08/81-07/822LB	wine red D - MJ 1982>> - MJ 1982			
2A	999 591 749 02	Clip Discontinued part		6	
(2A)	999 591 749 02	Clip		4	
3	928 555 047 03	Trim Rear lid Leatherette D >> - MJ 1979	rear	1	
	08/77-07/7920B	Dark green			
	08/77-07/7921S	brown			
	08/77-07/7940D	Cork			
	08/77-07/7905T	Black			

Model	Year	MG	SG	Illustration	Restrictions	UPD	7:23	27.10.2023
928	1978	8	07	807-010		738		

Pos	Part Number	Description	Remark	Qty	Model
(3)	928 555 047 02	Trim for cars without Rear window wiper Leatherette D - MJ 1980>> - MJ 1981	rear	1	
	08/79-07/8105T	Black			
	08/79-07/8130B	blue			
	08/79-07/8121S	brown			
(3)	928 555 047 04	Trim for vehicles with Rear window wiper Leatherette D - MJ 1980>> - MJ 1981	rear	1	
	08/79-07/8105T	Black			
	08/79-07/8130B	blue			
	08/79-07/8121S	brown			
3	928 555 047 05	Trim for vehicles with Rear window wiper and Luggage compartment lamp Leatherette D - MJ 1982>> - MJ 1982	rear	1	
	08/81-07/8205T	Black			
	08/81-07/8230B	blue			
	08/81-07/8221S	Trim			
(3)	928 555 047 50	Trim Rear lid Leather D >> - MJ 1979	rear	1	
	08/77-07/7920B	Dark green			
	08/77-07/793NG	brown			
	08/77-07/7940D	Cork			
	08/77-07/791AJ	Black			
(3)	928 555 047 51	Trim for cars without Rear window wiper Leather D - MJ 1980>> - MJ 1981	rear	1	
	08/79-07/811AJ	Black			
	08/79-07/8130B	blue			

Model	Year	MG	SG	Illustration	Restrictions	UPD	7:23	27.10.2023
928	1978	8	07	807-010		738		

Pos	Part Number	Description	Remark	Qty	Model
	08/79-07/813NG	brown			
	08/79-07/8160S	Hannibal grey			
	08/79-07/8120S	Mint green			
(3)	928 555 047 52	Trim for vehicles with Rear window wiper Leather D - MJ 1980>> - MJ 1981	rear	1	
	08/79-07/811AJ	Black			
	08/79-07/8130B	blue			
	08/79-07/813NG	brown			
	08/79-07/8160S	Hannibal grey			
	08/79-07/8120S	Mint green			
3	928 555 047 53	Cover trim for vehicles with Rear window wiper and Luggage compartment lamp Leather D - MJ 1982>> - MJ 1982	rear	1	
	08/81-07/821AJ	Trim			
	08/81-07/8230B	blue			
	08/81-07/823NG	Trim			
	08/81-07/8260S	Trim			
	08/81-07/8220S	Mint green			
	08/81-07/822LB	Trim D - MJ 1982>> - MJ 1982			
3A	999 591 564 40	Spreader rivet		8	
3B	928 555 438 02	Double U-clip		5	
4	928 555 037 02	Trim Rear lid Leatherette	left	1	
	08/77-07/8220B	Dark green			
	08/77-07/8221S	brown			
	08/77-07/8240D	Cork			
	08/77-07/8205T	Black			
	08/77-07/8230B	blue			

Model	Year	MG	SG	Illustration	Restrictions	UPD	7:23	27.10.2023
928	1978	8	07	807-010		738		

Pos	Part Number	Description	Remark	Qty	Model
(4)	928 555 038 02	Trim Rear lid Leatherette	right	1	
	08/77-07/8220B	Dark green			
	08/77-07/8221S	brown			
	08/77-07/8240D	Cork			
	08/77-07/8205T	Black			
	08/77-07/8230B	blue			
(4)	928 555 037 50	Trim Rear lid Leather	left	1	
	08/77-07/8220B	Dark green			
	08/77-07/823NG	brown			
	08/77-07/8240D	Cork			
	08/77-07/821AJ	Black			
	08/77-07/8230B	blue			
	08/77-07/8260S	Hannibal grey			
	08/77-07/8220S	Mint green			
	08/81-07/822LB	wine red D - MJ 1982>> - MJ 1982			
4	928 555 038 50	Trim Rear lid Leather	right	1	
	08/77-07/8220B	Dark green			
	08/77-07/823NG	brown			
	08/77-07/8240D	Cork			
	08/77-07/821AJ	Black			
	08/77-07/8230B	blue			
	08/77-07/8260S	Hannibal grey			
	08/77-07/8220S	Mint green			
	08/81-07/822LB	wine red D - MJ 1982>> - MJ 1982			
4A	928 555 437 02	Double U-clip		12	
5	928 555 527 02	Trim Rear lid Leatherette	rear	1	

Model	Year	MG	SG	Illustration	Restrictions	UPD	7:23	27.10.2023
928	1978	8	07	807-010		738		

Pos	Part Number	Description	Remark	Qty	Model
	08/77-07/8220B	Dark green			
	08/77-07/8221S	brown			
	08/77-07/8240D	Cork			
	08/77-07/8205T	Black			
	08/77-07/8230B	blue			
(5)	928 555 527 50	Trim Rear lid Leather	rear	1	
	08/77-07/8220B	Dark green			
	08/77-07/823NG	brown			
	08/77-07/8240D	Cork			
	08/77-07/821AJ	Black			
	08/77-07/8230B	blue			
	08/77-07/8260S	Hannibal grey			
	08/77-07/8220S	Mint green			
	08/81-07/822LB	wine red D - MJ 1982>> - MJ 1982			
5A	999 591 559 40	Clip		8	
(6)	928 555 015 03	door panel Leatherette Carpet	left	1	928
	08/77-07/82BB1	Dark green/green			
	08/77-07/82BB3	Brown/brown			
	08/77-07/82BB4	Cork/cork			
	08/77-07/82BB5	Cork/brown			
	08/77-07/82BB2	black/black			
	08/77-07/82BB6	Blue/blue			
	08/77-07/82BB7	Brown/beige			
	08/77-07/82BB8	Beige/Beige			
6	928 555 016 03	door panel Leatherette Carpet	right	1	928
	08/77-07/82BB1	Dark green/green			
	08/77-07/82BB3	Brown/brown			

Model	Year	MG	SG	Illustration	Restrictions	UPD	7:23	27.10.2023
928	1978	8	07	807-010		738		

Pos	Part Number	Description	Remark	Qty	Model
	08/77-07/82BB4	Cork/cork			
	08/77-07/82BB5	Cork/brown			
	08/77-07/82BB2	black/black			
	08/77-07/82BB6	Blue/blue			
	08/77-07/82BB7	Brown/beige			
	08/77-07/82BB8	Beige/Beige			
(6)	928 555 015 06	door panel Leatherette Carpet	left	1	928S
	08/77-07/82BB2	black/black			
	08/77-07/82BB6	Blue/blue			
	08/77-07/82BB3	Brown/brown			
	08/77-07/82BB8	Beige/Beige			
(6)	928 555 016 06	door panel Leatherette Carpet	right	1	928S
	08/77-07/82BB2	black/black			
	08/77-07/82BB6	Blue/blue			
	08/77-07/82BB3	Brown/brown			
	08/77-07/82BB8	Beige/Beige			
6	928 555 015 50	door panel Leather Carpet	left	1	
	08/77-07/8220B	Dark green			
	08/77-07/823NG	brown			
	08/77-07/8240D	Cork			
	08/77-07/821AJ	Black			
	08/77-07/8230B	blue			
	08/77-07/8280S	Can-can red/black			
	08/77-07/8295S	Papyrus			
	08/77-07/8260S	Hannibal grey			
	08/77-07/8220S	Mint green			
(6)	928 555 016 50	door panel Leather Carpet	right	1	

Model	Year	MG	SG	Illustration	Restrictions	UPD	7:23	27.10.2023
928	1978	8	07	807-010		738		

Pos	Part Number	Description	Remark	Qty	Model
	08/77-07/8220B	Dark green			
	08/77-07/823NG	brown			
	08/77-07/8240D	Cork			
	08/77-07/821AJ	Black			
	08/77-07/8230B	blue			
	08/77-07/8280S	Can-can red/black			
	08/77-07/8295S	Papyrus			
	08/77-07/8260S	Hannibal grey			
	08/77-07/8220S	Mint green			
(6)	928 555 015 54	door panel Leather Carpet	left	1	
	08/77-07/82BG1	black/black			
	08/77-07/82BG2	Brown/brown			
	08/77-07/82BG3	Blue/blue			
	08/77-07/82BG5	Beige/Beige			
	08/81-07/82HS7	Burgundy/burgundy D - MJ 1982>> - MJ 1982			
(6)	928 555 016 54	door panel Leather Carpet	right	1	
	08/77-07/82BG1	black/black			
	08/77-07/82BG2	Brown/brown			
	08/77-07/82BG3	Blue/blue			
	08/77-07/82BG5	Beige/Beige			
	08/81-07/82HS7	Burgundy/burgundy D - MJ 1982>> - MJ 1982			
6A	999 591 461 01	Securing clip Loudspeaker		8	
6B	823 867 299	Clip		26	
(7)	928 555 901 02	Armrest Leatherette	left	1	
	08/77-07/7920B	Dark green D >> - MJ 1979			
	08/77-07/8240A	brown			

Model	Year	MG	SG	Illustration	Restrictions	UPD	7:23	27.10.2023
928	1978	8	07	807-010		738		

Pos	Part Number	Description	Remark	Qty	Model
	08/77-07/8205T	Black			
	08/77-07/7940D	Cork D >> - MJ 1979			
	08/79-07/8230B	blue D - MJ 1980>>			
7	928 555 902 02	Armrest Leatherette	right	1	
	08/77-07/7920B	Dark green D >> - MJ 1979			
	08/77-07/8240A	brown			
	08/77-07/8205T	Black			
	08/77-07/7940D	Cork D >> - MJ 1979			
	08/79-07/8230B	blue D - MJ 1980>>			
(7)	928 555 901 50	Armrest Leather	left	1	
	08/77-07/7920B	Dark green D >> - MJ 1979			
	08/77-07/823NG	brown			
	08/77-07/821AJ	Black			
	08/77-07/7940D	Cork D >> - MJ 1979			
	08/79-07/8230B	blue D - MJ 1980>>			
	08/77-07/8280S	Can-can-red			
	08/77-07/8295S	Papyrus			
	08/80-07/8260S	Hannibal grey D - MJ 1981>>			
	08/80-07/8220S	Mint green D - MJ 1981>>			
	08/81-07/822LB	wine red D - MJ 1982>> - MJ 1982			
7	928 555 902 50	Armrest Leather	right	1	
	08/77-07/7920B	Dark green D >> - MJ 1979			
	08/77-07/823NG	brown			

Model	Year	MG	SG	Illustration	Restrictions	UPD	7:23	27.10.2023
928	1978	8	07	807-010		738		

Pos	Part Number	Description	Remark	Qty	Model
	08/77-07/821AJ	Black			
	08/77-07/7940D	Cork D >> - MJ 1979			
	08/79-07/8230B	blue D - MJ 1980>>			
	08/77-07/8280S	Can-can-red			
	08/77-07/8295S	Papyrus			
	08/80-07/8260S	Hannibal grey D - MJ 1981>>			
	08/80-07/8220S	Mint green D - MJ 1981>>			
	08/81-07/822LB	wine red D - MJ 1982>> - MJ 1982			
7A	928 555 383 02	Cover cap		4	
(8)	928 555 025 02	Trim Door frame Leatherette	left	1	
	08/77-07/8220B	Dark green			
	08/77-07/8240A	brown			
	08/77-07/8270A	Black			
	08/77-07/8240D	Cork			
	08/77-07/8230B	blue			
	08/77-07/8250B	beige			
8	928 555 026 02	Trim Door frame Leatherette	right	1	
	08/77-07/8220B	Dark green			
	08/77-07/8240A	brown			
	08/77-07/8270A	Black			
	08/77-07/8240D	Cork			
	08/77-07/8230B	blue			
	08/77-07/8250B	beige			
(8)	928 555 025 50	Trim Door frame Leather	left	1	
	08/77-07/8220B	Dark green			

Model	Year	MG	SG	Illustration	Restrictions	UPD	7:23	27.10.2023
928	1978	8	07	807-010		738		

Pos	Part Number	Description	Remark	Qty	Model
	08/77-07/823NG	brown			
	08/77-07/821AJ	Black			
	08/77-07/8240D	Cork			
	08/77-07/8230B	blue			
	08/77-07/8250B	beige			
	08/77-07/8260S	Hannibal grey			
	08/77-07/8220S	Mint green			
	08/81-07/822LB	wine red D - MJ 1982>> - MJ 1982			
(8)	928 555 026 50	Trim Door frame Leather	right	1	
	08/77-07/8220B	Dark green			
	08/77-07/823NG	brown			
	08/77-07/821AJ	Black			
	08/77-07/8240D	Cork			
	08/77-07/8230B	blue			
	08/77-07/8250B	beige			
	08/77-07/8260S	Hannibal grey			
	08/77-07/8220S	Mint green			
	08/81-07/822LB	wine red D - MJ 1982>> - MJ 1982			
8A	928 555 493 02	Clip		14	
8B	928 555 569 02	guide bush		2	
9	928 555 043 03	Cover Leatherette		2	
	08/77-07/8220B	Dark green			
	08/77-07/8221S	brown			
	08/77-07/8205T	Black			
	08/77-07/8240D	Cork			
9	928 555 233 50	Cover Leather		2	
	08/77-07/8220B	Dark green			
	08/77-07/823NG	brown			

Model	Year	MG	SG	Illustration	Restrictions	UPD	7:23	27.10.2023
928	1978	8	07	807-010		738		

Pos	Part Number	Description	Remark	Qty	Model
	08/77-07/821AJ	Black			
	08/77-07/8240D	Cork			
	08/77-07/8230B	blue			
	08/77-07/8250B	beige			
	08/77-07/8260S	Hannibal grey			
	08/77-07/8220S	Mint green			
	08/81-07/822LB	wine red D - MJ 1982>> - MJ 1982			
10	928 555 607 02	Pushbutton		2	
10	928 555 607 02	Pushbutton		2	
	08/77-07/8270B	Black			
(11)	928 555 553 02	Steering rod	left	1	
11	928 555 554 02	Steering rod	right	1	
(12)	928 574 087 02	Vent	left	1	
12	928 574 088 02	Vent	right	1	
(14)	928 555 053 02	Pull handle Leatherette D >> - MJ 1981 Discontinued part	left	1	
	08/77-07/8120B	Dark green			
	08/77-07/8140A	brown			
	08/77-07/8170A	Black			
	08/77-07/8140D	Cork			
	08/77-07/8130B	blue			
(14)	928 555 053 03	Handle Leatherette D - MJ 1982>> - MJ 1982 Discontinued part	left	1	
	08/81-07/8220B	Dark green			
	08/81-07/8240A	brown			
	08/81-07/8270A	Black			
	08/81-07/8240D	Cork			
	08/81-07/8230B	blue			

Model	Year	MG	SG	Illustration	Restrictions	UPD	7:23	27.10.2023
928	1978	8	07	807-010		738		

Pos	Part Number	Description	Remark	Qty	Model
14	928 555 054 02	Pull handle Leatherette D >> - MJ 1981 Discontinued part	right	1	
	08/77-07/8120B	Dark green			
	08/77-07/8140A	brown			
	08/77-07/8170A	Black			
	08/77-07/8140D	Cork			
	08/77-07/8130B	blue			
14	928 555 054 03	Handle Leatherette D - MJ 1982>> - MJ 1982 Discontinued part	right	1	
	08/81-07/8220B	Dark green			
	08/81-07/8240A	brown			
	08/81-07/8270A	Black			
	08/81-07/8240D	Cork			
	08/81-07/8230B	blue			
(14)	928 555 053 04	Pull handle Leatherette	left	1	
	08/77-07/8220B	Dark green			
	08/77-07/8240A	brown			
	08/77-07/8205T	Black			
	08/77-07/8240D	Cork			
	08/77-07/8230B	blue			
14	928 555 054 04	Pull handle Leatherette	right	1	
	08/77-07/8220B	Dark green			
	08/77-07/8240A	brown			
	08/77-07/8205T	Black			
	08/77-07/8240D	Cork			
	08/77-07/8230B	blue			
(14)	928 555 267 52	Pull handle (leather)	left	1	
	08/77-07/821AJ	Black			
	08/77-07/823NG	brown			

Model	Year	MG	SG	Illustration	Restrictions	UPD	7:23	27.10.2023
928	1978	8	07	807-010		738		

Pos	Part Number	Description	Remark	Qty	Model
	08/77-07/8240D	Cork			
	08/77-07/8230B	blue			
	08/77-07/8260S	Hannibal grey			
	08/77-07/8220S	Mint green			
	08/81-07/822LB	wine red D - MJ 1982>> - MJ 1982			
14	928 555 268 52	Pull handle (leather)	right	1	
	08/77-07/821AJ	Black			
	08/77-07/823NG	brown			
	08/77-07/8240D	Cork			
	08/77-07/8230B	blue			
	08/77-07/8260S	Hannibal grey			
	08/77-07/8220S	Mint green			
	08/81-07/822LB	wine red D - MJ 1982>> - MJ 1982			
(15)	928 555 051 02	Trim Checker board velour	left	1	
	08/77-07/8257A	beige/black			
	08/77-07/8247A	brown/black			
	08/77-07/8237A	Blue/black			
	08/77-07/8279A	black/white			
	08/79-07/821BV	Grey/black D - MJ 1980>>			
	08/79-07/824NV	Beige/brown D - MJ 1980>>			
15	928 555 052 02	Trim Checker board velour	right	1	
	08/77-07/8257A	beige/black			
	08/77-07/8247A	brown/black			
	08/77-07/8237A	Blue/black			
	08/77-07/8279A	black/white			
	08/79-07/821BV	Grey/black D - MJ 1980>>			
	08/79-07/824NV	Beige/brown D - MJ 1980>>			

Model	Year	MG	SG	Illustration	Restrictions	UPD	7:23	27.10.2023
928	1978	8	07	807-010		738		

Pos	Part Number	Description	Remark	Qty	Model
(15)	928 555 051 02	Trim Pin stripe velour	left	1	
	08/77-07/8240D	Cork			
	08/77-07/8280D	Lobster			
	08/77-07/8270D	Black			
15	928 555 052 02	Trim Pin stripe velour	right	1	
	08/77-07/8240D	Cork			
	08/77-07/8280D	Lobster			
	08/77-07/8270D	Black			
(15)	928 555 051 02	Trim Fabric D - MJ 1980>>	left	1	
	08/79-07/8230C	blue D - MJ 1980>>			
	08/79-07/8240C	brown D - MJ 1980>>			
	08/79-07/8250C	beige D - MJ 1980>>			
	08/79-07/8270F	Black D - MJ 1980>>			
15	928 555 052 02	Trim Fabric D - MJ 1980>>	right	1	
	08/79-07/8230C	blue D - MJ 1980>>			
	08/79-07/8240C	brown D - MJ 1980>>			
	08/79-07/8250C	beige D - MJ 1980>>			
	08/79-07/8270F	Black D - MJ 1980>>			
(15)	928 555 051 02	Trim Tartan cloth D - MJ 1980>>	left	1	
	08/79-07/8283S	Red-blue D - MJ 1980>>			
	08/79-07/8223A	Green-blue D - MJ 1980>>			

Model	Year	MG	SG	Illustration	Restrictions	UPD	7:23	27.10.2023
928	1978	8	07	807-010		738		

Pos	Part Number	Description	Remark	Qty	Model
	08/79-07/8245A	Brown-beige D - MJ 1980>>			
15	928 555 052 02	Trim Tartan cloth D - MJ 1980>>	right	1	
	08/79-07/8283S	Red-blue D - MJ 1980>>			
	08/79-07/8223A	Green-blue D - MJ 1980>>			
	08/79-07/8245A	Brown-beige D - MJ 1980>>			
(15)	928 555 051 02	Trim Berber fabric	left	1	
	08/77-07/821GB	Grey/black			
	08/77-07/8237B	Blue/black			
	08/77-07/828NB	Beige/brown			
15	928 555 052 02	Trim Berber fabric	right	1	
	08/77-07/821GB	Grey/black			
	08/77-07/8237B	Blue/black			
	08/77-07/828NB	Beige/brown			
(15)	928 555 051 02	Trim Design:	left Striped	1	PR:406
	08/77-07/829LA	Burgundy-grey			
15	928 555 052 02	Trim Design:	right Striped	1	PR:406
	08/77-07/829LA	Burgundy-grey			
15	928 555 051 03	Trim Leatherette	left	1	
	08/77-07/8240D	Cork			
	08/77-07/8220B	Dark green			
	08/77-07/8221S	brown			
	08/77-07/8205T	Black			
	08/77-07/8230B	blue			
	08/77-07/8250B	beige			
15	928 555 052 03	Trim Leatherette	right	1	

Model	Year	MG	SG	Illustration	Restrictions	UPD	7:23	27.10.2023
928	1978	8	07	807-010		738		

Pos	Part Number	Description	Remark	Qty	Model
	08/77-07/8240D	Cork			
	08/77-07/8220B	Dark green			
	08/77-07/8221S	Black			
	08/77-07/8205T	Black			
	08/77-07/8230B	blue			
	08/77-07/8250B	beige			
(15)	928 555 051 50	Leather panel	left	1	
	08/77-07/823NG	brown			
	08/77-07/821AJ	Black			
	08/77-07/8240D	Cork			
	08/77-07/8220B	Dark green			
	08/77-07/8230B	blue			
	08/77-07/8250B	beige			
	08/77-07/8280S	Can-can red/black			
	08/77-07/8295S	Papyrus			
	08/77-07/8260S	Hannibal grey			
	08/77-07/8220S	Mint green			
15	928 555 052 50	Leather panel	right	1	
	08/77-07/823NG	brown			
	08/77-07/821AJ	Black			
	08/77-07/8240D	Cork			
	08/77-07/8220B	Dark green			
	08/77-07/8230B	blue			
	08/77-07/8250B	beige			
	08/77-07/8280S	Can-can red/black			
	08/77-07/8295S	Papyrus			
	08/77-07/8260S	Hannibal grey			
	08/77-07/8220S	Mint green			
15A	999 591 559 40	Clip		6	
15B	928 555 327 02	Double U-clip Discontinued part		8	

Model	Year	MG	SG	Illustration	Restrictions	UPD	7:23	27.10.2023
928	1978	8	07	807-010		738		

Pos	Part Number	Description	Remark	Qty	Model
15B	928 555 327 02	Double U-clip		8	
16	928 555 317 02	Rosette		2	
16	928 555 317 02	Rosette		2	
	08/77-07/8270B	Black			
17	928 555 363 02	Trim	lhd	1	
(17)	927 555 363 02	Trim jet	rhd side	1	
18	928 555 461 02	Support section	lhd	1	
18	927 555 461 02	Support section Switch for exterior mirror adjustment	rhd	1	
19	928 555 087 02	Stowage box Discontinued part	left	1	
19	928 555 088 02	Stowage box Discontinued part	right	1	
(19)	928 555 087 03	Stowage box	left	1	
	08/77-07/8271B	Black			
19	928 555 088 03	Stowage box	right	1	
	08/77-07/8271B	Black			
-	928 555 479 03	Protective film	left	1	
-	928 555 480 03	Protective film Door	right	1	
21	928 555 551 02	Cable guide		2	
(22)	928 555 579 02	Edge protection	left	1	
22	928 555 580 02	Edge protection	right	1	
(22A)	928 555 425 02	Trim B-pillar	left	1	
	08/77-07/8205T	Black			
(22A)	928 555 426 02	Trim B-pillar	right	1	
	08/77-07/8205T	Black			
23	928 555 263 02	Cover	left	1	
23	928 555 264 02	Cover Cable guide	right	1	
24	928 551 315 03	beading		2	

Model	Year	MG	SG	Illustration	Restrictions	UPD	7:23	27.10.2023
928	1978	8	07	807-010		738		

Pos	Part Number	Description	Remark	Qty	Model
25	**928 551 433 02**	**Cover cap**	**left**	**1**	
25	**928 551 434 02**	**Cover cap**	**right**	**1**	

Model	Year	MG	SG	Illustration	Restrictions	UPD	7:23	27.10.2023
928	1978	8	08	808-000		738		

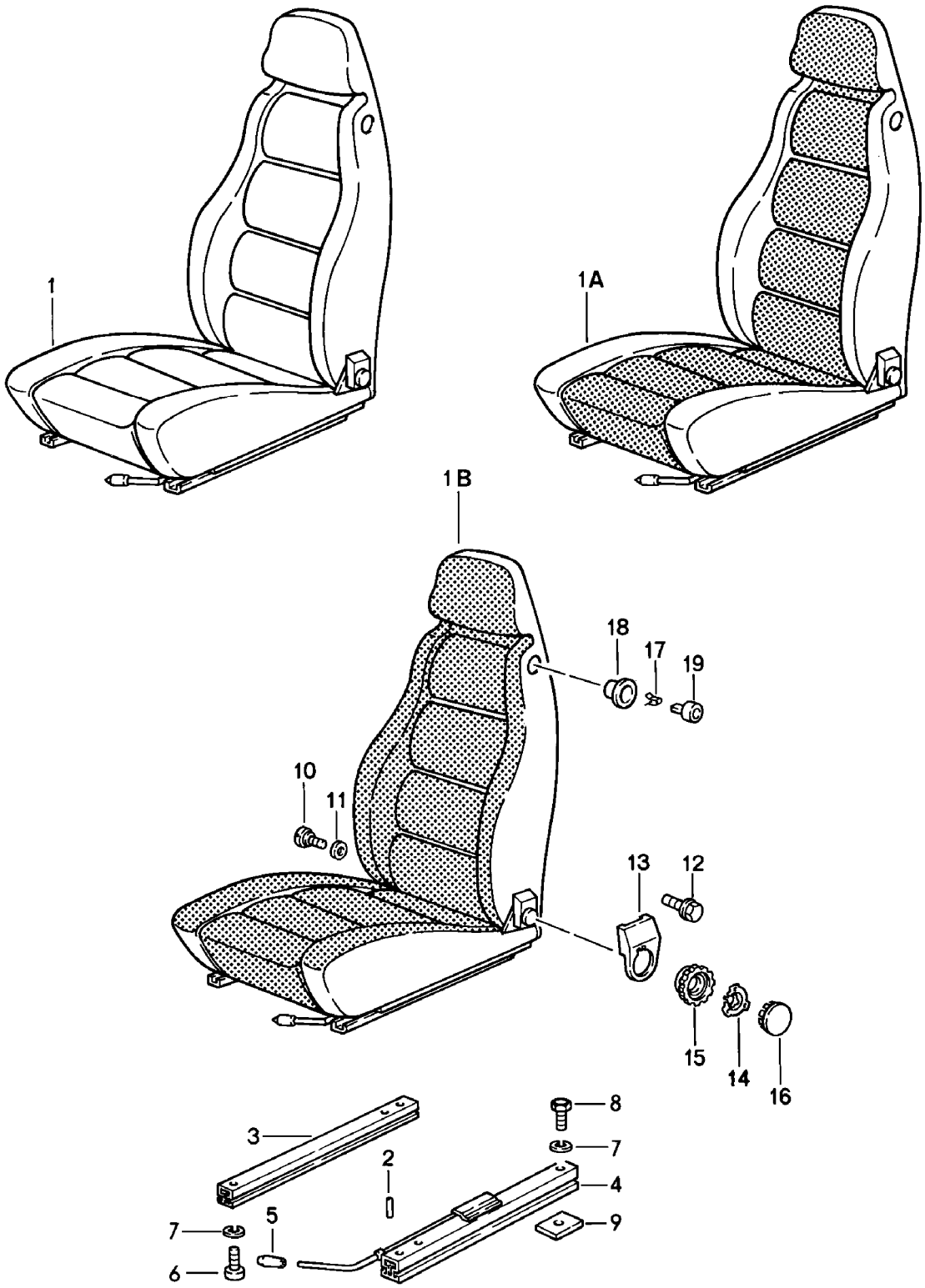

Model	Year	MG	SG	Illustration	Restrictions	UPD	7:23	27.10.2023
928	1978	8	08	808-000		738		

Pos	Part Number	Description	Remark	Qty	Model
		Front seats (complete)			**928 S** **928 "J.."**
1	**928 521 001 56**	**seat, complete** **Manually adjustable** **Leather** **Discontinued part**	**left**	**1**	
	08/77-07/8240D	**Cork**			
	08/77-07/8220B	**Dark green**			
	08/77-07/823NG	**brown**			
	08/77-07/821AJ	**Black**			
	08/77-07/8230B	**blue**			
	08/77-07/8250B	**beige**			
	08/77-07/8210A	**yellow**			
	08/77-07/8299A	**white**			
	08/77-07/8280B	**bright red**			
	08/77-07/8230A	**light blue**			
	08/77-07/8280S	**Can-can-red**			
	08/77-07/8295S	**Papyrus**			
	08/77-07/8260S	**Hannibal grey**			
	08/77-07/8220S	**Mint green**			
(1)	**928 521 002 56**	**seat, complete** **Manually adjustable** **Leather** **Discontinued part**	**right**	**1**	
	08/77-07/8240D	**Cork**			
	08/77-07/8220B	**Dark green**			
	08/77-07/823NG	**brown**			
	08/77-07/821AJ	**Black**			
	08/77-07/8230B	**blue**			
	08/77-07/8250B	**beige**			
	08/77-07/8210A	**yellow**			
	08/77-07/8299A	**white**			
	08/77-07/8280B	**bright red**			

Model	Year	MG	SG	Illustration	Restrictions	UPD	7:23	27.10.2023
928	1978	8	08	808-000		738		

Pos	Part Number	Description	Remark	Qty	Model
	08/77-07/8230A	light blue			
	08/77-07/8280S	Can-can-red			
	08/77-07/8295S	Papyrus			
	08/77-07/8260S	Hannibal grey			
	08/77-07/8220S	Mint green			
(1)	928 521 001 53	Comfort seat Leather Discontinued part	left	1	PR:437
	08/77-07/8240D	Cork			
	08/77-07/8220B	Dark green			
	08/77-07/823NG	brown			
	08/77-07/821AJ	Black			
	08/77-07/8230B	blue			
	08/77-07/8250B	beige			
	08/77-07/8210A	yellow			
	08/77-07/8299A	white			
	08/77-07/8280B	bright red			
	08/77-07/8230A	light blue			
	08/77-07/8280S	Can-can-red			
	08/77-07/8295S	Papyrus			
	08/77-07/8260S	Hannibal grey			
	08/77-07/8220S	Mint green			
(1)	928 521 002 53	Comfort seat Leather Discontinued part	right	1	PR:438
	08/77-07/8240D	Cork			
	08/77-07/8220B	Dark green			
	08/77-07/823NG	brown			
	08/77-07/821AJ	Black			
	08/77-07/8230B	blue			
	08/77-07/8250B	beige			
	08/77-07/8210A	yellow			
	08/77-07/8299A	white			

Model	Year	MG	SG	Illustration	Restrictions	UPD	7:23	27.10.2023
928	1978	8	08	808-000		738		

Pos	Part Number	Description	Remark	Qty	Model
	08/77-07/8280B	bright red			
	08/77-07/8230A	light blue			
	08/77-07/8280S	Can-can-red			
	08/77-07/8295S	Papyrus			
	08/77-07/8260S	Hannibal grey			
	08/77-07/8220S	Mint green			
1A	928 521 001 08	seat, complete Manually adjustable Leatherette Central section version: Checker board velour D >> - MJ 1979 Discontinued part	left	1	
	08/77-07/79AC1	Dark green beige/black			
	08/77-07/79AC2	brown brown/black			
	08/77-07/79AC3	Black beige/black			
	08/77-07/79AC4	Black brown/black			
	08/77-07/79AC5	Black Blue/black			
	08/77-07/79AC6	Cork beige/black			
	08/77-07/79AC7	Black black/white			
	08/77-07/79AD4	Cork brown/black			
(1A)	928 521 002 08	seat, complete Manually adjustable Leatherette Central section version: Checker board velour D >> - MJ 1979 Discontinued part	right	1	
	08/77-07/79AC1	Dark green beige/black			
	08/77-07/79AC2	brown brown/black			
	08/77-07/79AC3	Black beige/black			

Model	Year	MG	SG	Illustration	Restrictions	UPD	7:23	27.10.2023
928	1978	8	08	808-000		738		

Pos	Part Number	Description	Remark	Qty	Model
	08/77-07/79AC4	Black brown/black			
	08/77-07/79AC5	Black Blue/black			
	08/77-07/79AC6	Cork beige/black			
	08/77-07/79AC7	Black black/white			
	08/77-07/79AD4	Cork brown/black			
(1A)	928 521 001 06	Comfort seat Leatherette Central section version: Checker board velour D >> - MJ 1979 Discontinued part	left	1	PR:437
	08/77-07/79AC1	Dark green beige/black			
	08/77-07/79AC2	brown brown/black			
	08/77-07/79AC3	Black beige/black			
	08/77-07/79AC4	Black brown/black			
	08/77-07/79AC5	Black Blue/black			
	08/77-07/79AC6	Cork beige/black			
	08/77-07/79AC7	Black black/white			
	08/77-07/79AD4	Cork brown/black			
(1A)	928 521 002 06	Comfort seat Leatherette Central section version: Checker board velour D >> - MJ 1979 Discontinued part	right	1	PR:438
	08/77-07/79AC1	Dark green beige/black			
	08/77-07/79AC2	brown brown/black			
	08/77-07/79AC3	Black beige/black			

Model	Year	MG	SG	Illustration	Restrictions	UPD	7:23	27.10.2023
928	1978	8	08	808-000		738		

Pos	Part Number	Description	Remark	Qty	Model
	08/77-07/79AC4	Black brown/black			
	08/77-07/79AC5	Black Blue/black			
	08/77-07/79AC6	Cork beige/black			
	08/77-07/79AC7	Black black/white			
	08/77-07/79AD4	Cork brown/black			
1A	928 521 001 08	seat, complete Manually adjustable Leatherette Central section version: Pin stripe velour D >> - MJ 1979 Discontinued part	left	1	
	08/77-07/79AC8	Cork			
	08/77-07/79AC9	Black/cork			
	08/77-07/79AD1	Dark green/cork			
	08/77-07/79AD2	Black/lobster			
	08/77-07/79AD3	black/black			
(1A)	928 521 002 08	seat, complete Manually adjustable Leatherette Central section version: Pin stripe velour D >> - MJ 1979 Discontinued part	right	1	
	08/77-07/79AC8	Cork			
	08/77-07/79AC9	Black/cork			
	08/77-07/79AD1	Dark green/cork			
	08/77-07/79AD2	Black/lobster			
	08/77-07/79AD3	black/black			
(1A)	928 521 001 06	Comfort seat Leatherette Central section version: Pin stripe velour D >> - MJ 1979 Discontinued part	left	1	PR:437
	08/77-07/79AC8	Cork			
	08/77-07/79AC9	Comfort seat			

Model	Year	MG	SG	Illustration	Restrictions	UPD	7:23	27.10.2023
928	1978	8	08	808-000		738		

Pos	Part Number	Description	Remark	Qty	Model
	08/77-07/79AD1	Comfort seat			
	08/77-07/79AD2	Comfort seat			
	08/77-07/79AD3	Comfort seat			
(1A)	928 521 002 06	Comfort seat Leatherette Central section version: Pin stripe velour D >> - MJ 1979 Discontinued part	right	1	PR:438
	08/77-07/79AC8	Comfort seat			
	08/77-07/79AC9	Comfort seat			
	08/77-07/79AD1	Comfort seat			
	08/77-07/79AD2	Comfort seat			
	08/77-07/79AD3	Comfort seat			
1A	928 521 001 57	seat, complete Manually adjustable Leather Central section version: Checker board velour Discontinued part	left	1	
	08/77-07/82AH1	Dark green beige/black			
	08/77-07/82AH2	brown brown/black			
	08/77-07/82AH3	Black beige/black			
	08/77-07/82AH4	Black Blue/black			
	08/77-07/82AH5	Cork beige/black			
	08/77-07/82AH6	Black black/white			
	08/77-07/82AH7	Cork brown/black			
	08/77-07/82AH8	Black brown/black			
	08/77-07/82AJ1	Blue/black Blue/black			
	08/77-07/82AJ2	Grey/black Grey/black			

Model	Year	MG	SG	Illustration	Restrictions	UPD	7:23	27.10.2023
928	1978	8	08	808-000		738		

Pos	Part Number	Description	Remark	Qty	Model
	08/77-07/82AJ3	Beige/brown Beige/brown			
	08/77-07/82AJ4	Beige/brown Beige/brown			
	08/77-07/82AJ5	beige brown/black			
(1A)	928 521 002 57	seat, complete Manually adjustable Leather Central section version: Checker board velour Discontinued part	right	1	
	08/77-07/82AH1	Dark green beige/black			
	08/77-07/82AH2	brown brown/black			
	08/77-07/82AH3	Black beige/black			
	08/77-07/82AH4	Black Blue/black			
	08/77-07/82AH5	Cork beige/black			
	08/77-07/82AH6	Black black/white			
	08/77-07/82AH7	Cork brown/black			
	08/77-07/82AH8	Black brown/black			
	08/77-07/82AJ1	Blue/black Blue/black			
	08/77-07/82AJ2	Grey/black Grey/black			
	08/77-07/82AJ3	Beige/brown Beige/brown			
	08/77-07/82AJ4	Beige/brown Beige/brown			
	08/77-07/82AJ5	beige brown/black			
(1A)	928 521 001 54	Comfort seat Leather Central section version: Checker board velour Discontinued part	left	1	PR:437

Model	Year	MG	SG	Illustration	Restrictions	UPD	7:23	27.10.2023
928	1978	8	08	808-000		738		

Pos	Part Number	Description	Remark	Qty	Model
	08/77-07/82AH1	Dark green beige/black			
	08/77-07/82AH2	brown brown/black			
	08/77-07/82AH3	Black beige/black			
	08/77-07/82AH4	Black Blue/black			
	08/77-07/82AH5	Cork beige/black			
	08/77-07/82AH6	Black black/white			
	08/77-07/82AH7	Cork brown/black			
	08/77-07/82AH8	Black brown/black			
	08/77-07/82AJ1	Comfort seat Blue/black			
	08/77-07/82AJ2	Comfort seat Grey/black			
	08/77-07/82AJ3	Comfort seat Beige/brown			
	08/77-07/82AJ4	Comfort seat Beige/brown			
	08/77-07/82AJ5	beige brown/black			
(1A)	928 521 002 54	Comfort seat Leather Central section version: Checker board velour Discontinued part	right	1	PR:438
	08/77-07/82AH1	Dark green beige/black			
	08/77-07/82AH2	brown brown/black			
	08/77-07/82AH3	Black beige/black			
	08/77-07/82AH4	Black Blue/black			
	08/77-07/82AH5	Cork beige/black			

Model	Year	MG	SG	Illustration	Restrictions	UPD	7:23	27.10.2023
928	1978	8	08	808-000		738		

Pos	Part Number	Description	Remark	Qty	Model
	08/77-07/82AH6	Black black/white			
	08/77-07/82AH7	Cork brown/black			
	08/77-07/82AH8	Black brown/black			
	08/77-07/82AJ1	Comfort seat Blue/black			
	08/77-07/82AJ2	Comfort seat Grey/black			
	08/77-07/82AJ3	Comfort seat Beige/brown			
	08/77-07/82AJ4	Comfort seat Beige/brown			
	08/77-07/82AJ5	beige brown/black			
1A	928 521 001 57	seat, complete Manually adjustable Leather Central section version: Fabric Discontinued part	left	1	
	08/77-07/82AK1	Blue/blue			
	08/77-07/82AK2	brown			
	08/77-07/82AK3	Beige/Beige			
	08/77-07/82AK4	Black			
	08/77-07/82AK5	Brown-beige			
(1A)	928 521 002 57	seat, complete Manually adjustable Leather Central section version: Fabric Discontinued part	right	1	
	08/77-07/82AK1	Blue/blue			
	08/77-07/82AK2	brown			
	08/77-07/82AK3	Beige/Beige			
	08/77-07/82AK4	Black			
	08/77-07/82AK5	Brown-beige			

Model	Year	MG	SG	Illustration	Restrictions	UPD	7:23	27.10.2023
928	1978	8	08	808-000		738		

Pos	Part Number	Description	Remark	Qty	Model
(1A)	928 521 001 54	Comfort seat Leather Central section version: Fabric Discontinued part	left	1	PR:437
	08/77-07/82AK1	Blue/blue			
	08/77-07/82AK2	Comfort seat			
	08/77-07/82AK3	Comfort seat			
	08/77-07/82AK4	Comfort seat			
	08/77-07/82AK5	Comfort seat			
(1A)	928 521 002 54	Comfort seat Leather Central section version: Fabric Discontinued part	right	1	PR:438
	08/77-07/82AK1	Blue/blue			
	08/77-07/82AK2	Comfort seat			
	08/77-07/82AK3	Comfort seat			
	08/77-07/82AK4	Comfort seat			
	08/77-07/82AK5	Comfort seat			
1A	928 521 001 57	seat, complete Manually adjustable Leather Central section version: Tartan cloth Discontinued part	left	1	
	08/77-07/82AL1	blue Red-blue			
	08/77-07/82AL2	Black Red-blue			
	08/77-07/82AL3	blue Green-blue			
	08/77-07/82AL4	Black Green-blue			
	08/77-07/82AL5	Black Brown-beige			
	08/77-07/82AL6	brown Brown-beige			
	08/77-07/82AL7	beige Brown-beige			

Model	Year	MG	SG	Illustration	Restrictions	UPD	7:23	27.10.2023
928	1978	8	08	808-000		738		

Pos	Part Number	Description	Remark	Qty	Model
(1A)	928 521 002 57	seat, complete Manually adjustable Leather Central section version: Tartan cloth Discontinued part	right	1	
	08/77-07/82AL1	blue Red-blue			
	08/77-07/82AL2	Black Red-blue			
	08/77-07/82AL3	blue Green-blue			
	08/77-07/82AL4	Black Green-blue			
	08/77-07/82AL5	Black Brown-beige			
	08/77-07/82AL6	brown Brown-beige			
	08/77-07/82AL7	beige Brown-beige			
(1A)	928 521 001 54	Comfort seat Leather Central section version: Tartan cloth Discontinued part	left	1	PR:437
	08/77-07/82AL1	blue Red-blue			
	08/77-07/82AL2	Black Red-blue			
	08/77-07/82AL3	blue Green-blue			
	08/77-07/82AL4	Black Green-blue			
	08/77-07/82AL5	Black Brown-beige			
	08/77-07/82AL6	brown Brown-beige			
	08/77-07/82AL7	beige Brown-beige			
(1A)	928 521 002 54	Comfort seat Leather Central section version: Tartan cloth Discontinued part	right	1	PR:438

Model	Year	MG	SG	Illustration	Restrictions	UPD	7:23	27.10.2023
928	1978	8	08	808-000		738		

Pos	Part Number	Description	Remark	Qty	Model
	08/77-07/82AL1	blue Red-blue			
	08/77-07/82AL2	Black Red-blue			
	08/77-07/82AL3	blue Green-blue			
	08/77-07/82AL4	Black Green-blue			
	08/77-07/82AL5	Black Brown-beige			
	08/77-07/82AL6	brown Brown-beige			
	08/77-07/82AL7	beige Brown-beige			
1A	928 521 001 57	seat, complete Manually adjustable Leather Central section version: Discontinued part	left Striped	1	
	08/77-07/82HS6	Grey-burgundy Burgundy-grey			
(1A)	928 521 002 57	seat, complete Manually adjustable Leather Central section version: Discontinued part	right Striped	1	
	08/77-07/82HS6	Grey-burgundy Burgundy-grey			
(1A)	928 521 001 54	Comfort seat Leather Central section version: Discontinued part	left Striped	1	PR:437
	08/77-07/82HS6	Comfort seat Burgundy-grey			
(1A)	928 521 002 54	Comfort seat Leather Central section version: Discontinued part	right Striped	1	PR:438
	08/77-07/82HS6	Comfort seat Burgundy-grey			

Model	Year	MG	SG	Illustration	Restrictions	UPD	7:23	27.10.2023
928	1978	8	08	808-000		738		

Pos	Part Number	Description	Remark	Qty	Model
1B	928 521 001 09	seat, complete Manually adjustable Leatherette Seat and backrest surface Checker board velour D >> - MJ 1979 Discontinued part	left	1	
	08/77-07/79AA1	Dark green beige/black			
	08/77-07/79AA2	brown brown/black			
	08/77-07/79AA3	Black beige/black			
	08/77-07/79AA4	Black brown/black			
	08/77-07/79AA5	Black Blue/black			
	08/77-07/79AA6	Cork beige/black			
	08/77-07/79AA7	Black black/white			
	08/77-07/79AB4	Cork brown/black			
(1B)	928 521 002 09	seat, complete Manually adjustable Leatherette Seat and backrest surface Checker board velour D >> - MJ 1979 Discontinued part	right	1	
	08/77-07/79AA1	Dark green beige/black			
	08/77-07/79AA2	brown brown/black			
	08/77-07/79AA3	Black beige/black			
	08/77-07/79AA4	Black brown/black			
	08/77-07/79AA5	Black Blue/black			
	08/77-07/79AA6	Cork beige/black			
	08/77-07/79AA7	Black black/white			

Model	Year	MG	SG	Illustration	Restrictions	UPD	7:23	27.10.2023
928	1978	8	08	808-000		738		

Pos	Part Number	Description	Remark	Qty	Model
	08/77-07/79AB4	Cork brown/black			
(1B)	928 521 001 07	Comfort seat Leatherette Seat and backrest surface Checker board velour D >> - MJ 1979 Discontinued part	left	1	PR:437
	08/77-07/79AA1	Dark green beige/black			
	08/77-07/79AA2	brown brown/black			
	08/77-07/79AA3	Black beige/black			
	08/77-07/79AA4	Black brown/black			
	08/77-07/79AA5	Black Blue/black			
	08/77-07/79AA6	Cork beige/black			
	08/77-07/79AA7	Black black/white			
	08/77-07/79AB4	Cork brown/black			
(1B)	928 521 002 07	Comfort seat Leatherette Seat and backrest surface Checker board velour D >> - MJ 1979 Discontinued part	right	1	PR:438
	08/77-07/79AA1	Comfort seat beige/black			
	08/77-07/79AA2	brown brown/black			
	08/77-07/79AA3	Black beige/black			
	08/77-07/79AA4	Black brown/black			
	08/77-07/79AA5	Black Blue/black			
	08/77-07/79AA6	Cork beige/black			
	08/77-07/79AA7	Black black/white			

Model	Year	MG	SG	Illustration	Restrictions	UPD	7:23	27.10.2023
928	1978	8	08	808-000		738		

Pos	Part Number	Description	Remark	Qty	Model
	08/77-07/79AB4	Cork brown/black			
1B	928 521 001 09	seat, complete Manually adjustable Leatherette Seat and backrest surface Pin stripe velour D >> - MJ 1979 Discontinued part	left	1	
	08/77-07/79AA8	Cork			
	08/77-07/79AA9	Black/cork			
	08/77-07/79AB1	Dark green/cork			
	08/77-07/79AB2	Black/lobster			
	08/77-07/79AB3	black/black			
(1B)	928 521 002 09	seat, complete Manually adjustable Leatherette Seat and backrest surface Pin stripe velour D >> - MJ 1979 Discontinued part	right	1	
	08/77-07/79AA8	Cork			
	08/77-07/79AA9	Black/cork			
	08/77-07/79AB1	Dark green/cork			
	08/77-07/79AB2	Black/lobster			
	08/77-07/79AB3	black/black			
(1B)	928 521 001 07	Comfort seat Leatherette Seat and backrest surface Pin stripe velour D >> - MJ 1979 Discontinued part	left	1	PR:437
	08/77-07/79AA8	Comfort seat			
	08/77-07/79AA9	Comfort seat			
	08/77-07/79AB1	Comfort seat			
	08/77-07/79AB2	Comfort seat			
	08/77-07/79AB3	Comfort seat			

Model	Year	MG	SG	Illustration	Restrictions	UPD	7:23	27.10.2023
928	1978	8	08	808-000		738		

Pos	Part Number	Description	Remark	Qty	Model
(1B)	928 521 002 07	Comfort seat Leatherette Seat and backrest surface Pin stripe velour D >> - MJ 1979 Discontinued part	right	1	PR:438
	08/77-07/79AA8	Comfort seat			
	08/77-07/79AA9	Comfort seat			
	08/77-07/79AB1	Comfort seat			
	08/77-07/79AB2	Comfort seat			
	08/77-07/79AB3	Comfort seat			
1B	928 521 001 58	seat, complete Manually adjustable Leather Seat and backrest surface Berber fabric D - MJ 1981>> Discontinued part	left	1	
	08/80-07/82AK6	Grey/black Grey/black			
	08/80-07/82AK7	Blue/black Blue/black			
	08/80-07/82AK8	Beige/brown Beige/brown			
	08/80-07/82AK9	Beige/brown Beige/brown			
(1B)	928 521 002 58	seat, complete Manually adjustable Leather Seat and backrest surface Berber fabric D - MJ 1981>> Discontinued part	right	1	
	08/80-07/82AK6	Grey/black Grey/black			
	08/80-07/82AK7	Blue/black Blue/black			
	08/80-07/82AK8	Beige/brown Beige/brown			
	08/80-07/82AK9	Beige/brown Beige/brown			

Model	Year	MG	SG	Illustration	Restrictions	UPD	7:23	27.10.2023
928	1978	8	08	808-000		738		

Pos	Part Number	Description	Remark	Qty	Model
(1B)	928 521 001 55	Comfort seat Leather Seat and backrest surface Berber fabric D - MJ 1981>> Discontinued part	left	1	PR:437
	08/80-07/82AK6	Comfort seat Grey/black			
	08/80-07/82AK7	Comfort seat Blue/black			
	08/80-07/82AK8	Comfort seat Beige/brown			
	08/80-07/82AK9	Comfort seat Beige/brown			
(1B)	928 521 002 55	Comfort seat Leather Seat and backrest surface Berber fabric D - MJ 1981>> Discontinued part	right	1	PR:438
	08/80-07/82AK6	Comfort seat Grey/black			
	08/80-07/82AK7	Comfort seat Blue/black			
	08/80-07/82AK8	Comfort seat Beige/brown			
	08/80-07/82AK9	Comfort seat Beige/brown			
2	900 012 123 00	Pin 2,5 X 12		2	
3	944 521 491 00	Seat rail without: release lever See TPI GR.8 NR.34 Discontinued part		2	
3	944 521 491 00	Seat rail		2	
4	928 521 489 02	Seat rail Discontinued part	left	1	
(4)	928 521 490 02	Seat rail Discontinued part	right	1	
(5)	911 521 533 01	handle: seat longit. adjustm.		2	
	08/77-07/8201C	Satin black			
6	900 119 129 01	Socket head bolt		8	

Model	Year	MG	SG	Illustration	Restrictions	UPD	7:23	27.10.2023
928	1978	8	08	808-000		738		

Pos	Part Number	Description	Remark	Qty	Model
6	N 014 761 2	Socket head bolt with hexagon socket head M 6 X 12 Discontinued part		8	
6	900 119 129 01	Socket head bolt M 6 X 12		8	
7	N 012 006 4	spring ring B 6		16	
8	900 075 057 02	Hexagon bolt M 6 X 16		8	
8	900 075 057 03	Hexagon bolt M 6 X 16 No longer use the part here		8	
9	928 521 101 04	Threaded plate D - MJ 1980>>		8	
10	911 521 371 00	Screw		2	
11	999 025 117 40	Washer 12,5 X 32 X 1		X	
12	911 521 547 00	Screw M 10 X 20		8	
13	911 521 359 02	Trim	left	1	
(13)	911 521 360 02	Trim	right	1	
14	911 521 571 00	Tensioning spring		2	
(15)	911 521 381 02	Cover Rotary knob for backrest adjustment comprising: POS. 15 HANDRAD LEHNE POS. 16 Cover		2	
15	911 521 381 00	Covers backrest Discontinued part		2	
15	911 521 381 02	Cover backrest		2	
16	911 521 383 00	Cover Discontinued part		2	
16	911 521 381 02	Cover		2	
17	311 881 247	Clip		2	
18	928 521 815 02	Rosette		2	
19	928 521 817 02	press stud		2	

Model	Year	MG	SG	Illustration	Restrictions	UPD	7:24	27.10.2023
928	1978	8	08	808-005		738		

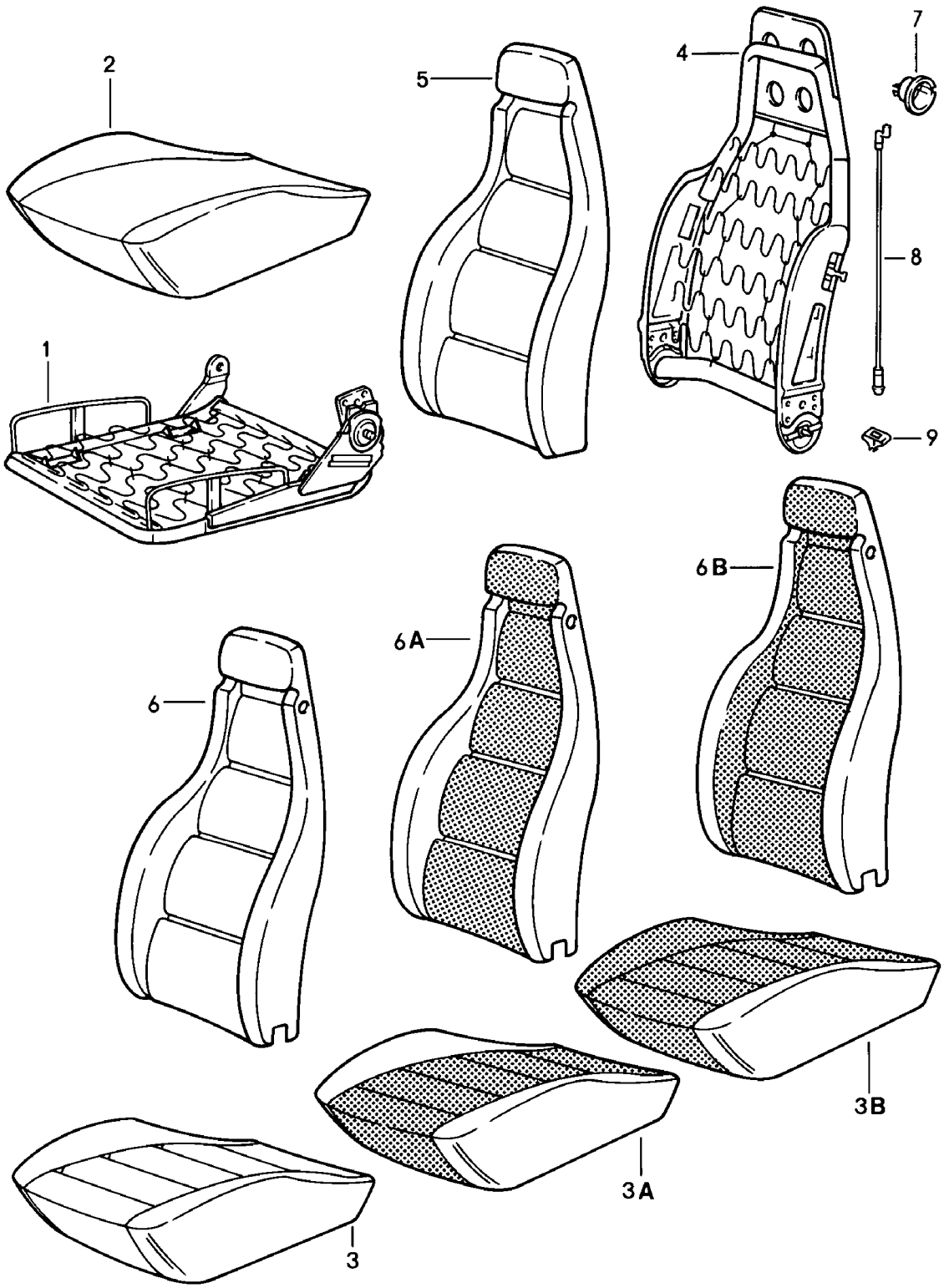

Model	Year	MG	SG	Illustration	Restrictions	UPD	7:24	27.10.2023
928	1978	8	08	808-005		738		

Pos	Part Number	Description	Remark	Qty	Model
		Front seats Individual parts			
1	928 521 069 02	frame for seat	left	1	
(1)	928 521 070 02	frame for seat	right	1	
(1)	928 521 069 05	frame for seat Comfort seat	left	1	
(1)	928 521 070 05	frame for seat Comfort seat	right	1	
2	928 521 385 04	Foam part	left	1	
(2)	928 521 386 04	Foam part	right	1	
3	928 521 037 50	Seat cover Leather Discontinued part	left	1	
	08/77-07/8240D	Cork			
	08/77-07/8220B	Dark green			
	08/77-07/823NG	brown			
	08/77-07/821AJ	Black			
	08/77-07/8230B	blue			
	08/77-07/8250B	beige			
	08/77-07/8210A	yellow			
	08/77-07/8299A	white			
	08/77-07/8280B	bright red			
	08/77-07/8230A	light blue			
	08/77-07/8280S	Can-can-red			
	08/77-07/8295S	Papyrus			
	08/77-07/8260S	Hannibal grey			
	08/77-07/8220S	Mint green			
(3)	928 521 038 50	Seat cover Leather Discontinued part	right	1	
	08/77-07/8240D	Cork			
	08/77-07/8220B	Dark green			
	08/77-07/823NG	brown			
	08/77-07/821AJ	Black			

Model	Year	MG	SG	Illustration	Restrictions	UPD	7:24	27.10.2023
928	1978	8	08	808-005		738		

Pos	Part Number	Description	Remark	Qty	Model
	08/77-07/8230B	blue			
	08/77-07/8250B	beige			
	08/77-07/8210A	yellow			
	08/77-07/8299A	white			
	08/77-07/8280B	bright red			
	08/77-07/8230A	light blue			
	08/77-07/8280S	Can-can-red			
	08/77-07/8295S	Papyrus			
	08/77-07/8260S	Hannibal grey			
	08/77-07/8220S	Mint green			
3	928 521 037 53	Seat cover Leather Discontinued part	left	1	PR:437
	08/77-07/8240D	Cork			
	08/77-07/8220B	Dark green			
	08/77-07/823NG	brown			
	08/77-07/821AJ	Black			
	08/77-07/8230B	blue			
	08/77-07/8250B	beige			
	08/77-07/8210A	yellow			
	08/77-07/8299A	white			
	08/77-07/8280B	bright red			
	08/77-07/8230A	light blue			
	08/77-07/8280S	Can-can-red			
	08/77-07/8295S	Papyrus			
	08/77-07/8260S	Hannibal grey			
	08/77-07/8220S	Leather			
(3)	928 521 038 53	Seat cover Leather Discontinued part	right	1	PR:438
	08/77-07/8240D	Cork			
	08/77-07/8220B	Dark green			
	08/77-07/823NG	brown			

Model	Year	MG	SG	Illustration	Restrictions	UPD	7:24	27.10.2023
928	1978	8	08	808-005		738		

Pos	Part Number	Description	Remark	Qty	Model
	08/77-07/821AJ	Black			
	08/77-07/8230B	blue			
	08/77-07/8250B	beige			
	08/77-07/8210A	yellow			
	08/77-07/8299A	white			
	08/77-07/8280B	bright red			
	08/77-07/8230A	light blue			
	08/77-07/8280S	Can-can-red			
	08/77-07/8295S	Papyrus			
	08/77-07/8260S	Hannibal grey			
	08/77-07/8220S	Leather			
3A	928 521 037 03	Seat cover Leatherette Central section version: Checker board velour D >> - MJ 1979 Discontinued part	left	1	
	08/77-07/79AC1	Dark green beige/black			
	08/77-07/79AC2	brown brown/black			
	08/77-07/79AC3	seat cover (leatherette) beige/black			
	08/77-07/79AC4	Black brown/black			
	08/77-07/79AC5	Black Blue/black			
	08/77-07/79AC6	Cork beige/black			
	08/77-07/79AC7	Black black/white			
	08/77-07/79AD4	Cork brown/black			
(3A)	928 521 038 03	Seat cover Leatherette Central section version: Checker board velour D >> - MJ 1979 Discontinued part	right	1	

Model	Year	MG	SG	Illustration	Restrictions	UPD	7:24	27.10.2023
928	1978	8	08	808-005		738		

Pos	Part Number	Description	Remark	Qty	Model
	08/77-07/79AC1	Dark green beige/black			
	08/77-07/79AC2	brown brown/black			
	08/77-07/79AC3	Black beige/black			
	08/77-07/79AC4	Black brown/black			
	08/77-07/79AC5	Black Blue/black			
	08/77-07/79AC6	Cork beige/black			
	08/77-07/79AC7	Black black/white			
	08/77-07/79AD4	Cork brown/black			
3A	928 521 037 06	Seat cover Leatherette Central section version: Checker board velour D >> - MJ 1979 Discontinued part	left	1	PR:437
	08/77-07/79AC1	Dark green beige/black			
	08/77-07/79AC2	brown brown/black			
	08/77-07/79AC3	Black beige/black			
	08/77-07/79AC4	Black brown/black			
	08/77-07/79AC5	Black Blue/black			
	08/77-07/79AC6	Cork beige/black			
	08/77-07/79AC7	Black black/white			
	08/77-07/79AD4	Cork brown/black			
(3A)	928 521 038 06	Seat cover Leatherette Central section version: Checker board velour D >> - MJ 1979 Discontinued part	right	1	PR:438

Model	Year	MG	SG	Illustration	Restrictions	UPD	7:24	27.10.2023
928	1978	8	08	808-005		738		

Pos	Part Number	Description	Remark	Qty	Model
	08/77-07/79AC1	Dark green beige/black			
	08/77-07/79AC2	brown brown/black			
	08/77-07/79AC3	Black beige/black			
	08/77-07/79AC4	Black brown/black			
	08/77-07/79AC5	Black Blue/black			
	08/77-07/79AC6	Cork beige/black			
	08/77-07/79AC7	Black black/white			
	08/77-07/79AD4	Cork brown/black			
3A	928 521 037 03	Seat cover Leatherette Central section version: Pin stripe velour D >> - MJ 1979 Discontinued part	left	1	
	08/77-07/79AC8	Seat cover			
	08/77-07/79AC9	Seat cover			
	08/77-07/79AD1	Seat cover			
	08/77-07/79AD2	Seat cover			
	08/77-07/79AD3	Seat cover			
(3A)	928 521 038 03	Seat cover Leatherette Central section version: Pin stripe velour D >> - MJ 1979 Discontinued part	right	1	
	08/77-07/79AC8	Seat cover			
	08/77-07/79AC9	Seat cover			
	08/77-07/79AD1	Seat cover			
	08/77-07/79AD2	Seat cover			
	08/77-07/79AD3	Seat cover			

Model	Year	MG	SG	Illustration	Restrictions	UPD	7:24	27.10.2023
928	1978	8	08	808-005		738		

Pos	Part Number	Description	Remark	Qty	Model
3A	928 521 037 06	Seat cover Leatherette Central section version: Pin stripe velour D >> - MJ 1979 Discontinued part	left	1	PR:437
	08/77-07/79AC8	Seat cover			
	08/77-07/79AC9	Seat cover			
	08/77-07/79AD1	Seat cover			
	08/77-07/79AD2	Seat cover			
	08/77-07/79AD3	Seat cover			
(3A)	928 521 038 06	Seat cover Leatherette Central section version: Pin stripe velour D >> - MJ 1979 Discontinued part	right	1	PR:438
	08/77-07/79AC8	Seat cover			
	08/77-07/79AC9	Seat cover			
	08/77-07/79AD1	Seat cover			
	08/77-07/79AD2	Seat cover			
	08/77-07/79AD3	Seat cover			
3A	928 521 037 51	Seat cover Leather Central section version: Checker board velour Discontinued part	left	1	
	08/77-07/82AH1	Dark green beige/black			
	08/77-07/82AH2	brown brown/black			
	08/77-07/82AH3	Black beige/black			
	08/77-07/82AH4	Black Blue/black			
	08/77-07/82AH5	Cork beige/black			
	08/77-07/82AH6	Black black/white			
	08/77-07/82AH7	Cork brown/black			

Model	Year	MG	SG	Illustration	Restrictions	UPD	7:24	27.10.2023
928	1978	8	08	808-005		738		

Pos	Part Number	Description	Remark	Qty	Model
	08/77-07/82AH8	Black brown/black			
	08/77-07/82AJ1	Seat cover Blue/black			
	08/77-07/82AJ2	Seat cover Grey/black			
	08/77-07/82AJ3	Seat cover Beige/brown			
	08/77-07/82AJ4	Seat cover Beige/brown			
	08/77-07/82AJ5	beige brown/black			
(3A)	928 521 038 51	Seat cover Leather Central section version: Checker board velour Discontinued part	right	1	
	08/77-07/82AH1	Dark green beige/black			
	08/77-07/82AH2	brown brown/black			
	08/77-07/82AH3	Black beige/black			
	08/77-07/82AH4	Black Blue/black			
	08/77-07/82AH5	Cork beige/black			
	08/77-07/82AH6	Black black/white			
	08/77-07/82AH7	Cork brown/black			
	08/77-07/82AH8	Black brown/black			
	08/77-07/82AJ1	Seat cover Blue/black			
	08/77-07/82AJ2	Seat cover Grey/black			
	08/77-07/82AJ3	Seat cover Beige/brown			
	08/77-07/82AJ4	Seat cover Beige/brown			

Model	Year	MG	SG	Illustration	Restrictions	UPD	7:24	27.10.2023
928	1978	8	08	808-005		738		

Pos	Part Number	Description	Remark	Qty	Model
	08/77-07/82AJ5	beige brown/black			
3A	928 521 037 54	Seat cover Leather Central section version: Checker board velour Discontinued part	left	1	PR:437
	08/77-07/82AH1	Dark green beige/black			
	08/77-07/82AH2	brown brown/black			
	08/77-07/82AH3	Black beige/black			
	08/77-07/82AH4	Black Blue/black			
	08/77-07/82AH5	Cork beige/black			
	08/77-07/82AH6	Black black/white			
	08/77-07/82AH7	Cork brown/black			
	08/77-07/82AH8	Black brown/black			
	08/77-07/82AJ1	Seat cover Blue/black			
	08/77-07/82AJ2	Seat cover Grey/black			
	08/77-07/82AJ3	Seat cover Beige/brown			
	08/77-07/82AJ4	Seat cover Beige/brown			
	08/77-07/82AJ5	beige brown/black			
(3A)	928 521 038 54	Seat cover Leather Central section version: Checker board velour Discontinued part	right	1	PR:438
	08/77-07/82AH1	Dark green beige/black			
	08/77-07/82AH2	brown brown/black			

Model	Year	MG	SG	Illustration	Restrictions	UPD	7:24	27.10.2023
928	1978	8	08	808-005		738		

Pos	Part Number	Description	Remark	Qty	Model
	08/77-07/82AH3	Black beige/black			
	08/77-07/82AH4	Black Blue/black			
	08/77-07/82AH5	Cork beige/black			
	08/77-07/82AH6	Black black/white			
	08/77-07/82AH7	Cork brown/black			
	08/77-07/82AH8	Black brown/black			
	08/77-07/82AJ1	Seat cover Blue/black			
	08/77-07/82AJ2	Seat cover Grey/black			
	08/77-07/82AJ3	Seat cover Beige/brown			
	08/77-07/82AJ4	Seat cover Beige/brown			
	08/77-07/82AJ5	beige brown/black			
3A	928 521 037 51	Seat cover Leather Central section version: Fabric Discontinued part	left	1	
	08/77-07/82AK1	Blue/blue			
	08/77-07/82AK2	Seat cover			
	08/77-07/82AK3	Seat cover			
	08/77-07/82AK4	Seat cover			
	08/77-07/82AK5	Seat cover			
(3A)	928 521 038 51	Seat cover Leather Central section version: Fabric Discontinued part	right	1	
	08/77-07/82AK1	Blue/blue			
	08/77-07/82AK2	Seat cover			
	08/77-07/82AK3	Seat cover			

Model	Year	MG	SG	Illustration	Restrictions	UPD	7:24	27.10.2023
928	1978	8	08	808-005		738		

Pos	Part Number	Description	Remark	Qty	Model
	08/77-07/82AK4	Seat cover			
	08/77-07/82AK5	Seat cover			
3A	928 521 037 54	Seat cover Leather Central section version: Fabric Discontinued part	left	1	PR:437
	08/77-07/82AK1	Blue/blue			
	08/77-07/82AK2	Seat cover			
	08/77-07/82AK3	Seat cover			
	08/77-07/82AK4	Seat cover			
	08/77-07/82AK5	Seat cover			
(3A)	928 521 038 54	Seat cover Leather Central section version: Fabric Discontinued part	right	1	PR:438
	08/77-07/82AK1	Blue/blue			
	08/77-07/82AK2	Seat cover			
	08/77-07/82AK3	Seat cover			
	08/77-07/82AK4	Seat cover			
	08/77-07/82AK5	Seat cover			
3A	928 521 037 51	Seat cover Leather Central section version: Tartan cloth Discontinued part	left	1	
	08/77-07/82AL1	blue Red-blue			
	08/77-07/82AL2	Black Red-blue			
	08/77-07/82AL3	blue Green-blue			
	08/77-07/82AL4	Black Green-blue			
	08/77-07/82AL5	Black Brown-beige			
	08/77-07/82AL6	brown Brown-beige			

Model	Year	MG	SG	Illustration	Restrictions	UPD	7:24	27.10.2023
928	1978	8	08	808-005		738		

Pos	Part Number	Description	Remark	Qty	Model
	08/77-07/82AL7	beige Brown-beige			
(3A)	928 521 038 51	Seat cover Leather Central section version: Tartan cloth Discontinued part	right	1	
	08/77-07/82AL1	blue Red-blue			
	08/77-07/82AL2	Black Red-blue			
	08/77-07/82AL3	blue Green-blue			
	08/77-07/82AL4	Black Green-blue			
	08/77-07/82AL5	Black Brown-beige			
	08/77-07/82AL6	brown Brown-beige			
	08/77-07/82AL7	beige Brown-beige			
3A	928 521 037 54	Seat cover Leather Central section version: Tartan cloth Discontinued part	left	1	PR:437
	08/77-07/82AL1	blue Red-blue			
	08/77-07/82AL2	Black Red-blue			
	08/77-07/82AL3	blue Green-blue			
	08/77-07/82AL4	Black Green-blue			
	08/77-07/82AL5	Black Brown-beige			
	08/77-07/82AL6	brown Brown-beige			
	08/77-07/82AL7	beige Brown-beige			

Model	Year	MG	SG	Illustration	Restrictions	UPD	7:24	27.10.2023
928	1978	8	08	808-005		738		

Pos	Part Number	Description	Remark	Qty	Model
(3A)	928 521 038 54	Seat cover Leather Central section version: Tartan cloth Discontinued part	right	1	PR:438
	08/77-07/82AL1	blue Red-blue			
	08/77-07/82AL2	Black Red-blue			
	08/77-07/82AL3	blue Green-blue			
	08/77-07/82AL4	Black Green-blue			
	08/77-07/82AL5	Black Brown-beige			
	08/77-07/82AL6	brown Brown-beige			
	08/77-07/82AL7	beige Brown-beige			
3A	928 521 037 51	Seat cover Leather Central section version: Discontinued part	left Striped	1	
	08/77-07/82HS6	Seat cover Burgundy-grey			PR:406
(3A)	928 521 038 51	Seat cover Leather Central section version: Discontinued part	right Striped	1	
	08/77-07/82HS6	Seat cover Burgundy-grey			PR:406
3A	928 521 037 54	Seat cover Leather Central section version: Discontinued part	left Striped	1	PR:437
	08/77-07/82HS6	Seat cover Burgundy-grey			PR:406
(3A)	928 521 038 54	Seat cover Leather Central section version: Discontinued part	right Striped	1	PR:438
	08/77-07/82HS6	Seat cover Burgundy-grey			PR:406

Model	Year	MG	SG	Illustration	Restrictions	UPD	7:24	27.10.2023
928	1978	8	08	808-005		738		

Pos	Part Number	Description	Remark	Qty	Model
3B	928 521 037 04	Seat cover Leatherette Checker board velour D >> - MJ 1979 Discontinued part	left	1	
	08/77-07/79AA1	Dark green beige/black			
	08/77-07/79AA2	brown brown/black			
	08/77-07/79AA3	Black beige/black			
	08/77-07/79AA4	Black brown/black			
	08/77-07/79AA5	Black Blue/black			
	08/77-07/79AA6	Cork beige/black			
	08/77-07/79AA7	Black black/white			
	08/77-07/79AB4	Cork brown/black			
(3B)	928 521 038 04	Seat cover Leatherette Checker board velour D >> - MJ 1979 Discontinued part	right	1	
	08/77-07/79AA1	Dark green beige/black			
	08/77-07/79AA2	brown brown/black			
	08/77-07/79AA3	Black beige/black			
	08/77-07/79AA4	Black brown/black			
	08/77-07/79AA5	Black Blue/black			
	08/77-07/79AA6	Cork beige/black			
	08/77-07/79AA7	Black black/white			
	08/77-07/79AB4	Cork brown/black			

Model	Year	MG	SG	Illustration	Restrictions	UPD	7:24	27.10.2023
928	1978	8	08	808-005		738		

Pos	Part Number	Description	Remark	Qty	Model
3B	928 521 037 07	Seat cover Leatherette Checker board velour D >> - MJ 1979 Discontinued part	left	1	PR:437
	08/77-07/79AA1	Dark green beige/black			
	08/77-07/79AA2	brown brown/black			
	08/77-07/79AA3	Black beige/black			
	08/77-07/79AA4	Black brown/black			
	08/77-07/79AA5	Black Blue/black			
	08/77-07/79AA6	Cork beige/black			
	08/77-07/79AA7	Black black/white			
	08/77-07/79AB4	Cork brown/black			
(3B)	928 521 038 07	Seat cover Leatherette Checker board velour D >> - MJ 1979 Discontinued part	right	1	PR:438
	08/77-07/79AA1	Dark green beige/black			
	08/77-07/79AA2	brown brown/black			
	08/77-07/79AA3	Black beige/black			
	08/77-07/79AA4	Black brown/black			
	08/77-07/79AA5	Black Blue/black			
	08/77-07/79AA6	Cork beige/black			
	08/77-07/79AA7	Black black/white			
	08/77-07/79AB4	Cork brown/black			

Model	Year	MG	SG	Illustration	Restrictions	UPD	7:24	27.10.2023
928	1978	8	08	808-005		738		

Pos	Part Number	Description	Remark	Qty	Model
3B	928 521 037 04	Seat cover Leatherette Pin stripe velour D >> - MJ 1979 Discontinued part	left	1	
	08/77-07/79AA8	Seat cover			
	08/77-07/79AA9	Seat cover			
	08/77-07/79AB1	Seat cover			
	08/77-07/79AB2	Seat cover			
	08/77-07/79AB3	Seat cover			
(3B)	928 521 038 04	Seat cover Leatherette Pin stripe velour D >> - MJ 1979 Discontinued part	right	1	
	08/77-07/79AA8	Seat cover			
	08/77-07/79AA9	Seat cover			
	08/77-07/79AB1	Seat cover			
	08/77-07/79AB2	Seat cover			
	08/77-07/79AB3	Seat cover			
3B	928 521 037 07	Seat cover Leatherette Pin stripe velour D >> - MJ 1979 Discontinued part	left	1	PR:437
	08/77-07/79AA8	Seat cover			
	08/77-07/79AA9	Seat cover			
	08/77-07/79AB1	Seat cover			
	08/77-07/79AB2	Seat cover			
	08/77-07/79AB3	Seat cover			
(3B)	928 521 038 07	Seat cover Leatherette Pin stripe velour D >> - MJ 1979 Discontinued part	right	1	PR:438
	08/77-07/79AA8	Seat cover			
	08/77-07/79AA9	Seat cover			
	08/77-07/79AB1	Seat cover			
	08/77-07/79AB2	Seat cover			

Model	Year	MG	SG	Illustration	Restrictions	UPD	7:24	27.10.2023
928	1978	8	08	808-005		738		

Pos	Part Number	Description	Remark	Qty	Model
	08/77-07/79AB3	Seat cover			
3B	928 521 037 52	Seat cover Leather Berber fabric D - MJ 1981>> Discontinued part	left	1	
	08/80-07/82AK6	Seat cover Grey/black			
	08/80-07/82AK7	Seat cover Blue/black			
	08/80-07/82AK8	Seat cover Beige/brown			
	08/80-07/82AK9	Seat cover Beige/brown			
(3B)	928 521 038 52	Seat cover Leather Berber fabric D - MJ 1981>> Discontinued part	right	1	
	08/80-07/82AK6	Seat cover Grey/black			
	08/80-07/82AK7	Seat cover Blue/black			
	08/80-07/82AK8	Seat cover Beige/brown			
	08/80-07/82AK9	Seat cover Beige/brown			
3B	928 521 037 55	Seat cover Leather Berber fabric D - MJ 1981>> Discontinued part	left	1	PR:437
	08/80-07/82AK6	Seat cover Grey/black			
	08/80-07/82AK7	Seat cover Blue/black			
	08/80-07/82AK8	Seat cover Beige/brown			
	08/80-07/82AK9	Seat cover Beige/brown			
(3B)	928 521 038 55	Seat cover Leather Berber fabric D - MJ 1981>> Discontinued part	right	1	PR:438

Model	Year	MG	SG	Illustration	Restrictions	UPD	7:24	27.10.2023
928	1978	8	08	808-005		738		

Pos	Part Number	Description	Remark	Qty	Model
	08/80-07/82AK6	Seat cover Grey/black			
	08/80-07/82AK7	Seat cover Blue/black			
	08/80-07/82AK8	Seat cover Beige/brown			
	08/80-07/82AK9	Seat cover Beige/brown			
4	928 521 027 02	backrest frame	left	1	
(4)	928 521 028 02	backrest frame	right	1	
(4)	928 521 027 03	backrest frame Comfort seat	left	1	
(4)	928 521 028 03	backrest frame Comfort seat	right	1	
5	928 521 393 02	Foam part Backrest	left	1	
(5)	928 521 394 02	Foam part Backrest	right	1	
6	928 521 072 50	Backrest cover Leather Discontinued part		2	
	08/77-07/8240D	Cork			
	08/77-07/8220B	Dark green			
	08/77-07/823NG	Dark green			
	08/77-07/821AJ	Black			
	08/77-07/8230B	blue			
	08/77-07/8250B	beige			
	08/77-07/8210A	yellow			
	08/77-07/8299A	white			
	08/77-07/8280B	bright red			
	08/77-07/8230A	light blue			
	08/77-07/8280S	Can-can-red			
	08/77-07/8295S	Papyrus			
	08/77-07/8260S	Hannibal grey			
	08/77-07/8220S	Leather			

Model	Year	MG	SG	Illustration	Restrictions	UPD	7:24	27.10.2023
928	1978	8	08	808-005		738		

Pos	Part Number	Description	Remark	Qty	Model
6	928 521 071 53	Backrest cover Leather Discontinued part	left	1	PR:437
	08/77-07/8240D	Cork			
	08/77-07/8220B	Dark green			
	08/77-07/823NG	brown			
	08/77-07/821AJ	Black			
	08/77-07/8230B	blue			
	08/77-07/8250B	beige			
	08/77-07/8210A	yellow			
	08/77-07/8299A	white			
	08/77-07/8280B	bright red			
	08/77-07/8230A	light blue			
	08/77-07/8280S	Can-can-red			
	08/77-07/8295S	Papyrus			
	08/77-07/8260S	Hannibal grey			
	08/77-07/8220S	Leather			
(6)	928 521 072 53	Backrest cover Leather Discontinued part	right	1	PR:438
	08/77-07/8240D	Cork			
	08/77-07/8220B	Dark green			
	08/77-07/823NG	brown			
	08/77-07/821AJ	Black			
	08/77-07/8230B	blue			
	08/77-07/8250B	beige			
	08/77-07/8210A	yellow			
	08/77-07/8299A	white			
	08/77-07/8280B	bright red			
	08/77-07/8230A	light blue			
	08/77-07/8280S	Can-can-red			
	08/77-07/8295S	Papyrus			
	08/77-07/8260S	Hannibal grey			

Model	Year	MG	SG	Illustration	Restrictions	UPD	7:24	27.10.2023
928	1978	8	08	808-005		738		

Pos	Part Number	Description	Remark	Qty	Model
	08/77-07/8220S	Leather			
6A	928 521 072 03	Backrest cover Leatherette Central section version: Checker board velour Discontinued part		2	
	08/77-07/82AC1	Dark green beige/black			
	08/77-07/82AC2	brown brown/black			
	08/77-07/82AC3	Black beige/black			
	08/77-07/82AC4	Black brown/black			
	08/77-07/82AC5	Black Blue/black			
	08/77-07/82AC6	Backrest cover beige/black			
	08/77-07/82AC7	Black black/white			
	08/77-07/82AD4	Cork brown/black			
6A	928 521 071 06	Backrest cover Leatherette Central section version: Checker board velour Discontinued part	left	1	PR:437
	08/77-07/82AC1	Dark green beige/black			
	08/77-07/82AC2	brown brown/black			
	08/77-07/82AC3	Black beige/black			
	08/77-07/82AC4	Black brown/black			
	08/77-07/82AC5	Black Blue/black			
	08/77-07/82AC6	Cork beige/black			
	08/77-07/82AC7	Black black/white			
	08/77-07/82AD4	Cork brown/black			

Model	Year	MG	SG	Illustration	Restrictions	UPD	7:24	27.10.2023
928	1978	8	08	808-005		738		

Pos	Part Number	Description	Remark	Qty	Model
(6A)	928 521 072 06	Backrest cover Leatherette Central section version: Checker board velour Discontinued part	right	1	PR:438
	08/77-07/82AC1	Dark green beige/black			
	08/77-07/82AC2	brown brown/black			
	08/77-07/82AC3	Black beige/black			
	08/77-07/82AC4	Black brown/black			
	08/77-07/82AC5	Black Blue/black			
	08/77-07/82AC6	Cork beige/black			
	08/77-07/82AC7	Black black/white			
	08/77-07/82AD4	Cork brown/black			
6A	928 521 072 03	Backrest cover Leatherette Central section version: Pin stripe velour Discontinued part		2	
	08/77-07/82AC8	Cork/cork			
	08/77-07/82AC9	Black/cork			
	08/77-07/82AD1	Dark green/cork			
	08/77-07/82AD2	Black/lobster			
	08/77-07/82AD3	black/black			
6A	928 521 071 06	Backrest cover Leatherette Central section version: Pin stripe velour Discontinued part	left	1	PR:437
	08/77-07/82AC8	Backrest cover			
	08/77-07/82AC9	Backrest cover			
	08/77-07/82AD1	Backrest cover			
	08/77-07/82AD2	Backrest cover			
	08/77-07/82AD3	Backrest cover			

Model	Year	MG	SG	Illustration	Restrictions	UPD	7:24	27.10.2023
928	1978	8	08	808-005		738		

Pos	Part Number	Description	Remark	Qty	Model
(6A)	928 521 072 06	Backrest cover Leatherette Central section version: Pin stripe velour Discontinued part	right	1	PR:438
	08/77-07/82AC8	Backrest cover			
	08/77-07/82AC9	Backrest cover			
	08/77-07/82AD1	Backrest cover			
	08/77-07/82AD2	Backrest cover			
	08/77-07/82AD3	Backrest cover			
6A	928 521 072 51	Backrest cover Leather Central section version: Checker board velour Discontinued part		2	
	08/77-07/82AH1	Dark green beige/black			
	08/77-07/82AH2	brown brown/black			
	08/77-07/82AH3	Black beige/black			
	08/77-07/82AH4	Black Blue/black			
	08/77-07/82AH5	Cork beige/black			
	08/77-07/82AH6	Black black/white			
	08/77-07/82AH7	Cork brown/black			
	08/77-07/82AH8	Black brown/black			
	08/77-07/82AJ1	Blue/black Blue/black			
	08/77-07/82AJ2	Grey/black Grey/black			
	08/77-07/82AJ3	Beige/brown Beige/brown			
	08/77-07/82AJ4	Beige/brown Beige/brown			
	08/77-07/82AJ5	beige brown/black			

Model	Year	MG	SG	Illustration	Restrictions	UPD	7:24	27.10.2023
928	1978	8	08	808-005		738		

Pos	Part Number	Description	Remark	Qty	Model
6A	928 521 071 54	Backrest cover Leather Central section version: Checker board velour Discontinued part	left	1	PR:437
	08/77-07/82AH1	Dark green beige/black			
	08/77-07/82AH2	brown brown/black			
	08/77-07/82AH3	Black beige/black			
	08/77-07/82AH4	Black Blue/black			
	08/77-07/82AH5	Cork beige/black			
	08/77-07/82AH6	Black black/white			
	08/77-07/82AH7	Cork brown/black			
	08/77-07/82AH8	Black brown/black			
	08/77-07/82AJ1	Backrest cover Blue/black			
	08/77-07/82AJ2	Backrest cover Grey/black			
	08/77-07/82AJ3	Backrest cover Beige/brown			
	08/77-07/82AJ4	Backrest cover Beige/brown			
	08/77-07/82AJ5	beige brown/black			
(6A)	928 521 072 54	Backrest cover Leather Central section version: Checker board velour Discontinued part	right	1	PR:438
	08/77-07/82AH1	Dark green beige/black			
	08/77-07/82AH2	brown brown/black			
	08/77-07/82AH3	Black beige/black			

Model	Year	MG	SG	Illustration	Restrictions	UPD	7:24	27.10.2023
928	1978	8	08	808-005		738		

Pos	Part Number	Description	Remark	Qty	Model
	08/77-07/82AH4	Black Blue/black			
	08/77-07/82AH5	Cork beige/black			
	08/77-07/82AH6	Black black/white			
	08/77-07/82AH7	Cork brown/black			
	08/77-07/82AH8	Black brown/black			
	08/77-07/82AJ1	Backrest cover Blue/black			
	08/77-07/82AJ2	Backrest cover Grey/black			
	08/77-07/82AJ3	Backrest cover Beige/brown			
	08/77-07/82AJ4	Backrest cover Beige/brown			
	08/77-07/82AJ5	beige brown/black			
6A	928 521 072 51	Backrest cover Leather Central section version: Fabric Discontinued part		2	
	08/77-07/82AK1	Blue/blue			
	08/77-07/82AK2	Brown/brown			
	08/77-07/82AK3	Beige/Beige			
	08/77-07/82AK4	black/black			
	08/77-07/82AK5	Brown/beige			
6A	928 521 071 54	Backrest cover Leather Central section version: Fabric Discontinued part	left	1	PR:437
	08/77-07/82AK1	Blue/blue			
	08/77-07/82AK2	Backrest cover			
	08/77-07/82AK3	Backrest cover			
	08/77-07/82AK4	Backrest cover			
	08/77-07/82AK5	Backrest cover			

Model	Year	MG	SG	Illustration	Restrictions	UPD	7:24	27.10.2023
928	1978	8	08	808-005		738		

Pos	Part Number	Description	Remark	Qty	Model
(6A)	928 521 072 54	Backrest cover Leather Central section version: Fabric Discontinued part	right	1	PR:438
	08/77-07/82AK1	Blue/blue			
	08/77-07/82AK2	Backrest cover			
	08/77-07/82AK3	Backrest cover			
	08/77-07/82AK4	Backrest cover			
	08/77-07/82AK5	Backrest cover			
6A	928 521 072 51	Backrest cover Leather Central section version: Tartan cloth Discontinued part		2	
	08/77-07/82AL1	blue Red-blue			
	08/77-07/82AL2	Black Red-blue			
	08/77-07/82AL3	blue Green-blue			
	08/77-07/82AL4	Black Green-blue			
	08/77-07/82AL5	Black Brown-beige			
	08/77-07/82AL6	brown Brown-beige			
	08/77-07/82AL7	beige Brown-beige			
6A	928 521 071 54	Backrest cover Leather Central section version: Tartan cloth Discontinued part	left	1	PR:437
	08/77-07/82AL1	blue Red-blue			
	08/77-07/82AL2	Black Red-blue			
	08/77-07/82AL3	blue Green-blue			
	08/77-07/82AL4	Black Green-blue			

Model	Year	MG	SG	Illustration	Restrictions	UPD	7:24	27.10.2023
928	1978	8	08	808-005		738		

Pos	Part Number	Description	Remark	Qty	Model
	08/77-07/82AL5	Black Brown-beige			
	08/77-07/82AL6	brown Brown-beige			
	08/77-07/82AL7	beige Brown-beige			
(6A)	928 521 072 54	Backrest cover Leather Central section version: Tartan cloth Discontinued part	right	1	PR:438
	08/77-07/82AL1	blue Red-blue			
	08/77-07/82AL2	Black Red-blue			
	08/77-07/82AL3	blue Green-blue			
	08/77-07/82AL4	Black Green-blue			
	08/77-07/82AL5	Black Brown-beige			
	08/77-07/82AL6	brown Brown-beige			
	08/77-07/82AL7	beige Brown-beige			
6A	928 521 072 51	Backrest cover Leather Central section version: Discontinued part	Striped	2	
	08/77-07/82HS6	wine red Burgundy-grey			PR:406
6A	928 521 071 54	Backrest cover Leather Central section version: Discontinued part	left Striped	1	PR:437
	08/77-07/82HS6	Backrest cover Burgundy-grey			PR:406
(6A)	928 521 072 54	Backrest cover Leather Central section version: Discontinued part	right Striped	1	PR:438
	08/77-07/82HS6	Backrest cover Burgundy-grey			PR:406

Model	Year	MG	SG	Illustration	Restrictions	UPD	7:24	27.10.2023
928	1978	8	08	808-005		738		

Pos	Part Number	Description	Remark	Qty	Model
6B	928 521 072 04	Backrest cover Leatherette Checker board velour D >> - MJ 1979 Discontinued part		2	
	08/77-07/79AA1	Dark green beige/black			
	08/77-07/79AA2	brown brown/black			
	08/77-07/79AA3	Black beige/black			
	08/77-07/79AA4	Black brown/black			
	08/77-07/79AA5	Black Blue/black			
	08/77-07/79AA6	Cork beige/black			
	08/77-07/79AA7	Black black/white			
	08/77-07/79AB4	Cork brown/black			
6B	928 521 071 07	Backrest cover Leatherette Checker board velour D >> - MJ 1979 Discontinued part	left	1	PR:437
	08/77-07/79AA1	Dark green beige/black			
	08/77-07/79AA2	brown brown/black			
	08/77-07/79AA3	Black beige/black			
	08/77-07/79AA4	Black brown/black			
	08/77-07/79AA5	Black Blue/black			
	08/77-07/79AA6	Cork beige/black			
	08/77-07/79AA7	Black black/white			
	08/77-07/79AB4	Cork brown/black			

Model	Year	MG	SG	Illustration	Restrictions	UPD	7:24	27.10.2023
928	1978	8	08	808-005		738		

Pos	Part Number	Description	Remark	Qty	Model
(6B)	928 521 072 07	Backrest cover Leatherette Checker board velour D >> - MJ 1979 Discontinued part	right	1	PR:438
	08/77-07/79AA1	Dark green beige/black			
	08/77-07/79AA2	brown brown/black			
	08/77-07/79AA3	Black beige/black			
	08/77-07/79AA4	Black brown/black			
	08/77-07/79AA5	Black Blue/black			
	08/77-07/79AA6	Cork beige/black			
	08/77-07/79AA7	Black black/white			
	08/77-07/79AB4	Cork brown/black			
6B	928 521 072 04	Backrest cover Leatherette Pin stripe velour D >> - MJ 1979 Discontinued part		2	
	08/77-07/79AA8	Cork/cork			
	08/77-07/79AA9	Black/cork			
	08/77-07/79AB1	Dark green/cork			
	08/77-07/79AB2	Black/lobster			
	08/77-07/79AB3	black/black			
6B	928 521 071 07	Backrest cover Leatherette Pin stripe velour D >> - MJ 1979 Discontinued part	left	1	PR:437
	08/77-07/79AA8	Backrest cover			
	08/77-07/79AA9	Backrest cover			
	08/77-07/79AB1	Backrest cover			
	08/77-07/79AB2	Backrest cover			
	08/77-07/79AB3	Backrest cover			

Model	Year	MG	SG	Illustration	Restrictions	UPD	7:24	27.10.2023
928	1978	8	08	808-005		738		

Pos	Part Number	Description	Remark	Qty	Model
(6B)	928 521 072 07	Backrest cover Leatherette Pin stripe velour D >> - MJ 1979 Discontinued part	right	1	PR:438
	08/77-07/79AA8	Backrest cover			
	08/77-07/79AA9	Backrest cover			
	08/77-07/79AB1	Backrest cover			
	08/77-07/79AB2	Backrest cover			
	08/77-07/79AB3	Backrest cover			
6B	928 521 072 52	Backrest cover Leather Berber fabric D - MJ 1981>> Discontinued part		2	
	08/80-07/82AK6	Grey/black Grey/black			
	08/80-07/82AK7	Blue/black Blue/black			
	08/80-07/82AK8	Beige/brown Beige/brown			
	08/80-07/82AK9	Beige/brown Beige/brown			
6B	928 521 071 55	Backrest cover Leather Berber fabric D - MJ 1981>> Discontinued part	left	1	PR:437
	08/80-07/82AK6	Backrest cover Grey/black			
	08/80-07/82AK7	Backrest cover Blue/black			
	08/80-07/82AK8	Backrest cover Beige/brown			
	08/80-07/82AK9	Backrest cover Beige/brown			
(6B)	928 521 072 55	Backrest cover Leather Berber fabric D - MJ 1981>> Discontinued part	right	1	PR:438
	08/80-07/82AK6	Backrest cover Grey/black			

Model	Year	MG	SG	Illustration	Restrictions	UPD	7:24	27.10.2023
928	1978	8	08	808-005		738		

Pos	Part Number	Description	Remark	Qty	Model
	08/80-07/82AK7	**Backrest cover Blue/black**			
	08/80-07/82AK8	**Backrest cover Beige/brown**			
	08/80-07/82AK9	**Backrest cover Beige/brown**			
7	**928 521 813 02**	**Thrust ring**		**2**	
8	**911 521 361 01**	**Wire pull**		**2**	
9	**911 521 369 00**	**terminal**		**2**	

Model	Year	MG	SG	Illustration	Restrictions	UPD	7:24	27.10.2023
928	1978	8	08	808-010		738		

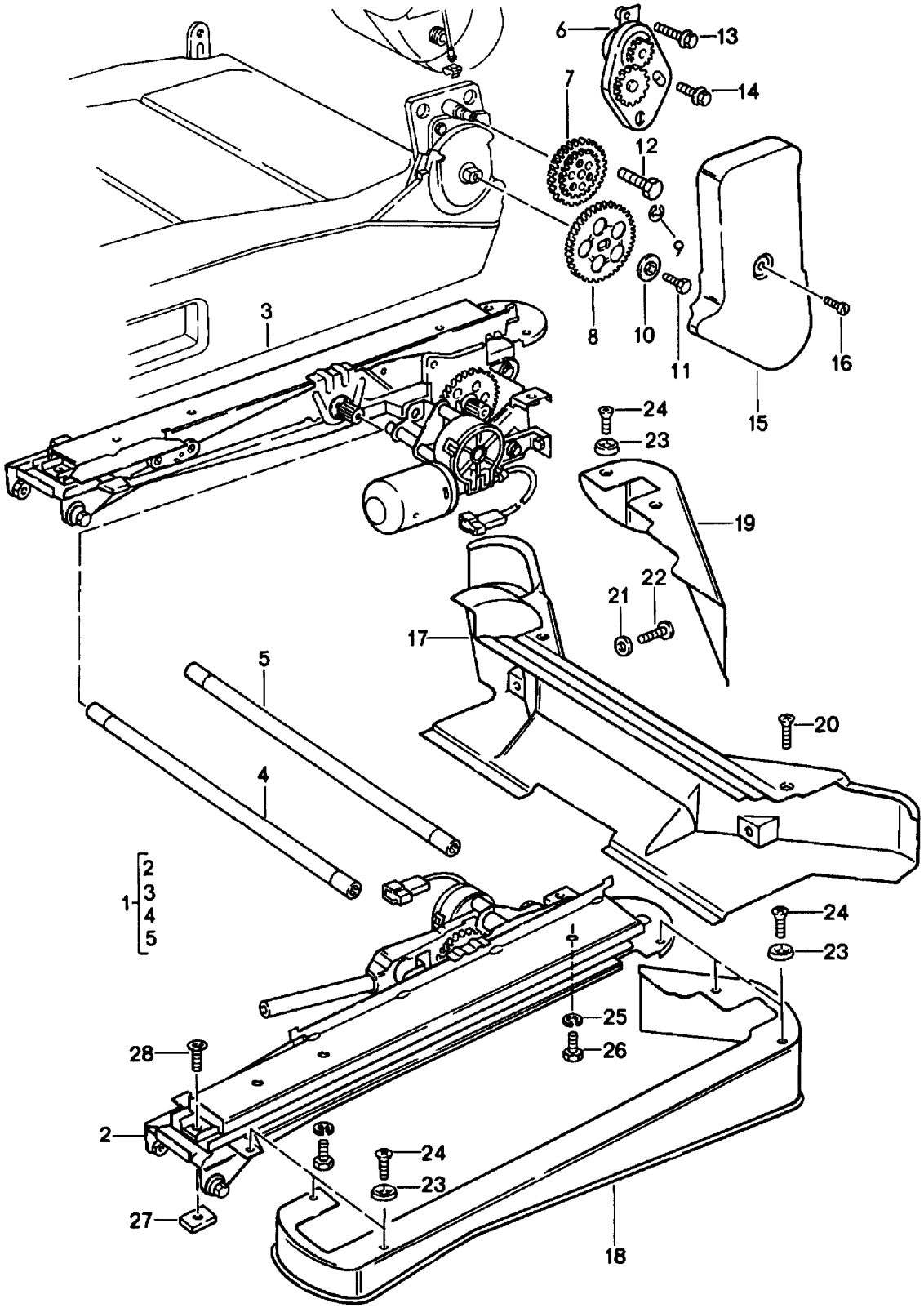

Model	Year	MG	SG	Illustration	Restrictions	UPD	7:24	27.10.2023
928	1978	8	08	808-010		738		

Pos	Part Number	Description	Remark	Qty	Model
		Seat adjuster Comfort seat Individual parts	electric		PR:437,438
1	928 521 059 02	Seat adjuster		2	
2	928 521 061 02	Drive unit	left	1	
3	928 521 062 02	Drive unit	right	1	
4	928 521 795 02	Connecting pipe Drive shaft for length adjustment		2	
5	928 521 797 02	Connecting pipe for height adjustment		2	
6	928 521 055 02	Support plate	left	1	
(6)	928 521 056 02	Support plate	right	1	
7	928 521 653 02	gear		1	
8	928 521 648 02	gear		1	
9	900 116 005 02	Retaining washer		2	
10	928 521 705 02	dished washer		2	
11	N 010 208 5	Hexagon bolt M 6 X 8		2	
12	911 521 547 00	Screw M 10 X 20		4	
13	999 217 005 02	Screw M 6 X 20		2	
14	999 217 003 02	Screw M 6 X 8		2	
15	928 521 785 02	Trim	left	1	
(15)	928 521 786 02	Trim	right	1	
16	N 014 122 17	fillister hd. bolt M 4 X 8		2	
16	N 014 122 8	fillister hd. bolt M 4 X 8		2	
16	N 014 122 17	fillister hd. bolt M 4 X 8		2	
17	928 521 781 04	Protective cap	rear	2	
18	928 521 761 04	Cover	left	1	
(18)	928 521 764 04	Cover	left	1	
(19)	928 521 762 04	Cover	right	1	

Model	Year	MG	SG	Illustration	Restrictions	UPD	7:24	27.10.2023
928	1978	8	08	808-010		738		

Pos	Part Number	Description	Remark	Qty	Model
19	928 521 763 04	Cover	right	1	
20	900 269 018 07	countersunk bolt M 5 X 16		2	
21	900 025 003 02	Washer A 5,3		2	
22	900 146 037 07	fillister hd. bolt M 5 X 16		2	
23	999 591 102 17	Hollow disc A 3,5 Discontinued part		6	
23	999 591 102 1H	Hollow disc A 3,5		6	
24	900 145 071 07	panel screw B 3,5 X 13		6	
25	N 012 006 4	spring ring B 6		4	
26	900 075 014 02	Hexagon bolt Discontinued part		4	
26	900 075 014 03	Hexagon bolt M 6 X 18		4	
27	928 521 101 04	Threaded plate D - MJ 1980>>		8	
28	900 249 008 02	countersunk bolt M 6 X 12		4	

Model	Year	MG	SG	Illustration	Restrictions	UPD	7:24	27.10.2023
928	1978	8	08	808-015		738		

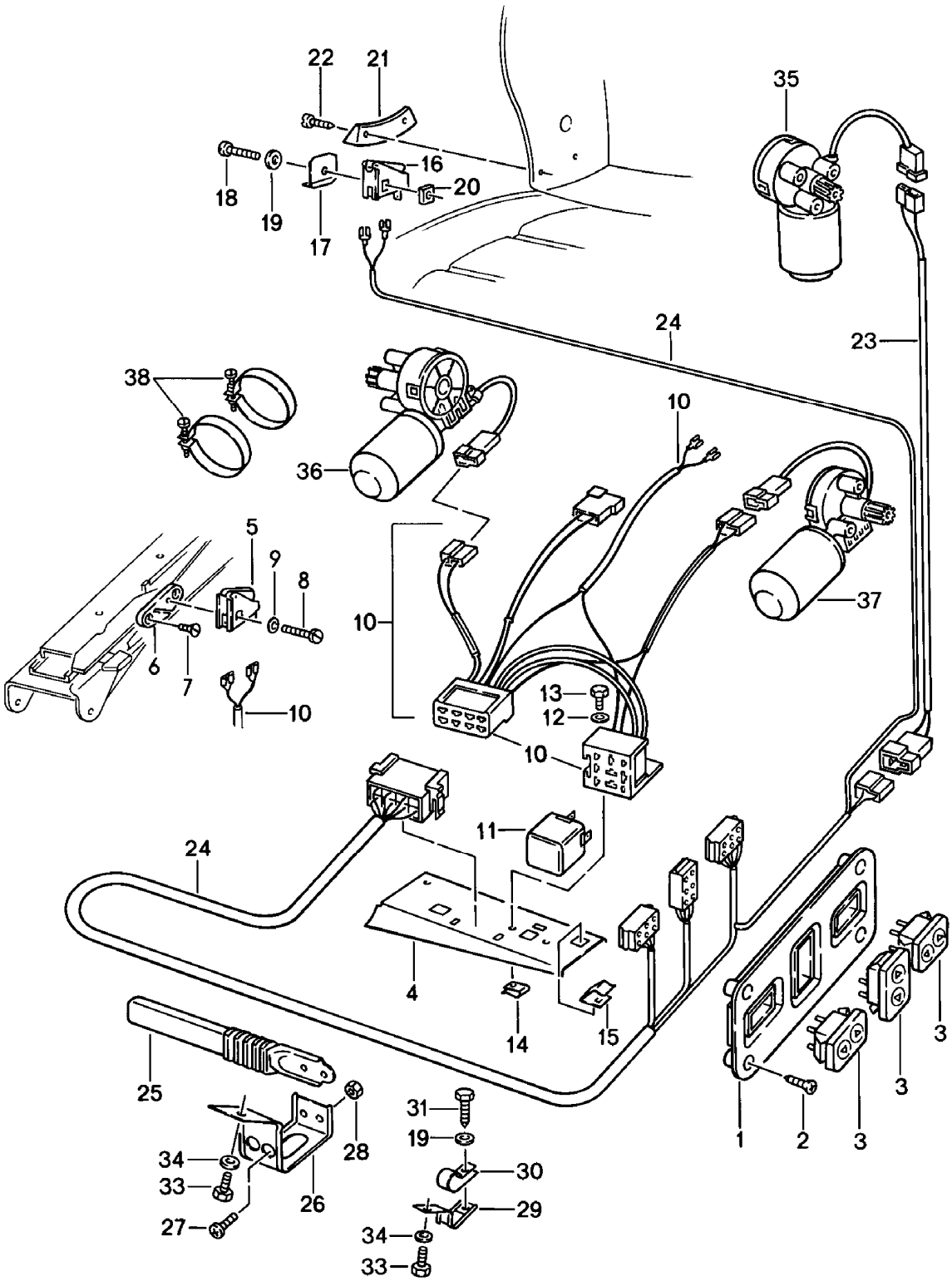

Model	Year	MG	SG	Illustration	Restrictions	UPD	7:24	27.10.2023
928	1978	8	08	808-015		738		

Pos	Part Number	Description	Remark	Qty	Model
		Electrical parts Electric drive Comfort seat			PR:437,438
1	928 521 351 04	Rosette		2	
2	900 143 049 07	panel screw BZ 3,5 X 9,5		8	
3	928 613 144 00	Push button		6	
4	928 615 129 01	Retainer for relay		2	
5	928 613 169 00	Switch D >> - MJ 1981		2	
6	928 613 471 00	Distance piece D >> - MJ 1981		2	
7	900 269 049 02	countersunk bolt M 4 X 6 D >> - MJ 1981		2	
8	900 146 025 02	Round-head screw M 4 X 18		2	
9	900 031 009 02	Washer 4,3		2	
10	928 612 174 01	Wire set Comfort seat D >> - MJ 1981	right	1	
10	928 612 174 04	Wire set Comfort seat D - MJ 1982>> - MJ 1982	right	1	
(10)	928 612 174 02	Wire set Comfort seat D >> - MJ 1981	left	1	
10	928 612 174 03	Wire set Comfort seat D - MJ 1982>> - MJ 1982	left	1	
11	928 615 123 00	Relay D >> - MJ 1981		2	
12	900 151 028 02	Washer A 4,3 Discontinued part		4	
12	900 151 028 01	Washer A 4,3		4	
13	900 187 013 02	hexagon head panel screw BZ 4,2 X 13 D >> - MJ 1981		6	

Model	Year	MG	SG	Illustration	Restrictions	UPD	7:24	27.10.2023
928	1978	8	08	808-015		738		

Pos	Part Number	Description	Remark	Qty	Model
14	N 015 429 2	Speed nut B 4,2 D >> - MJ 1981 Discontinued part		2	
14	N 015 429 6	Speed nut B 4,2		2	
15	999 651 146 02	Cable fastener		6	
16	928 613 167 00	Switch D >> - MJ 1981		2	
17	928 613 469 00	Distance piece D >> - MJ 1981		1	PR:437
(17)	928 613 470 00	Distance piece D >> - MJ 1981		1	PR:438
18	900 146 055 02	fillister hd. bolt M 4 X 25 D >> - MJ 1981		2	
19	900 025 002 02	Washer D >> - MJ 1981 Discontinued part		2	
19	900 025 002 03	Washer		2	
19	900 025 002 02	Washer A 4,3 D >> - MJ 1981 Discontinued part		2	
19	900 025 002 03	Washer A 4,3		2	
20	928 613 473 00	Threaded plate D >> - MJ 1981		2	
21	928 521 895 03	Pressure plate D >> - MJ 1981		2	
22	900 143 049 07	panel screw BZ 3,5 X 9,5 D >> - MJ 1981		8	
23	928 612 175 00	Wire set		2	
24	928 612 173 01	Wire set D >> - MJ 1981		2	
24	928 612 173 02	Wire set D - MJ 1982>> - MJ 1982		2	
25	928 555 551 03	Cable guide		2	
26	928 612 445 01	Bracket		2	
27	N 014 139 1B	fillister hd. bolt		4	

Model	Year	MG	SG	Illustration	Restrictions	UPD	7:24	27.10.2023
928	1978	8	08	808-015		738		

Pos	Part Number	Description	Remark	Qty	Model
27	N 014 139 11	fillister hd. bolt AM 6 X 12 Discontinued part		4	
27	N 014 139 1B	fillister hd. bolt AM 6 X 12		4	
28	900 076 010 0B	Nut		4	
28	900 076 010 03	Nut		4	
28	900 076 010 02	Nut M 6 Discontinued part		4	
28	900 076 010 0B	Nut M 6		4	
28	900 076 010 03	Nut M 6		4	
29	928 612 446 01	Bracket		2	
30	999 511 081 02	Clamp		2	
31	900 187 013 02	hexagon head panel screw BZ 4,2 X 13		6	
32	900 151 028 02	Washer A 4,3 Discontinued part		2	
32	900 151 028 01	Washer A 4,3		2	
33	N 010 208 5	Hexagon bolt M 6 X 8		4	
34	N 012 226 5	Spring washer B 6		4	
35	928 624 123 00	adjuster unit Backrest	left	1	
(35)	928 624 124 00	adjuster unit Backrest	right	1	
36	928 624 124 00	adjuster unit for height adjustment		2	
37	928 624 125 00	adjuster unit drive unit for longitudinal adjustment		2	
38	999 512 341 02	Clip		4	

Model	Year	MG	SG	Illustration	Restrictions	UPD	7:24	27.10.2023
928	1978	8	08	808-020		738		

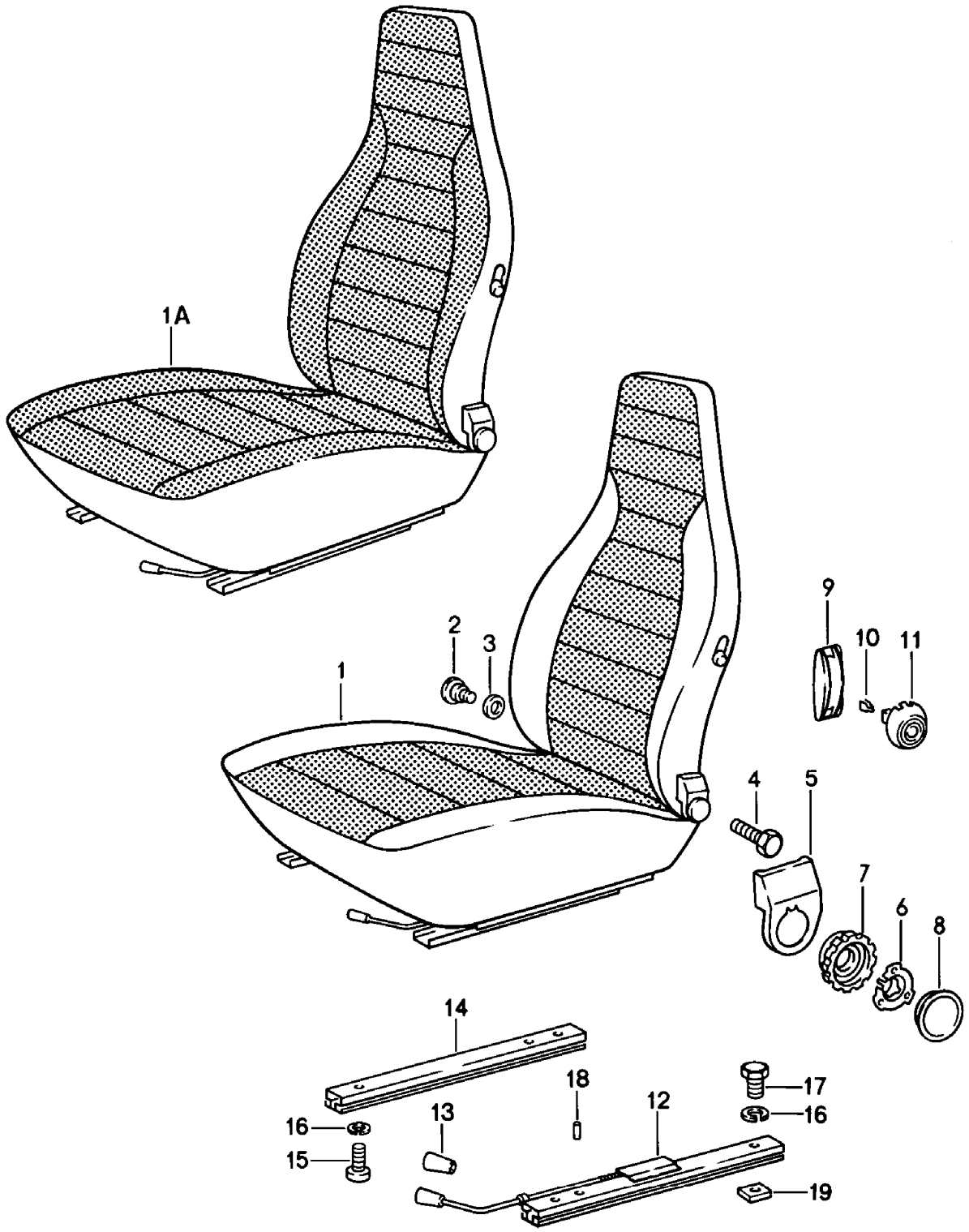

Model	Year	MG	SG	Illustration	Restrictions	UPD	7:24	27.10.2023
928	1978	8	08	808-020		738		

Pos	Part Number	Description	Remark	Qty	Model
		Front seats (complete)			**"J.." 928**
1	**928 521 001 30**	**seat, complete Leatherette Central section version: Checker board velour D - MJ 1980>> Discontinued part**	**left**	**1**	
	08/79-07/82AC2	**brown brown/black**			
	08/79-07/82AC4	**Black brown/black**			
	08/79-07/82AC5	**Black Blue/black**			
	08/79-07/82BC1	**blue Blue/black**			
	08/79-07/82FD8	**Grey/black Grey/black**			
	08/79-07/82FD9	**Beige/brown Beige/brown**			
	08/79-07/82BC4	**beige Beige/brown**			
	08/79-07/82BC5	**beige brown/black**			
(1)	**928 521 002 30**	**seat, complete Leatherette Central section version: Checker board velour D - MJ 1980>> Discontinued part**	**right**	**1**	
	08/79-07/82AC2	**brown brown/black**			
	08/79-07/82AC4	**Black brown/black**			
	08/79-07/82AC5	**Black Blue/black**			
	08/79-07/82BC1	**blue Blue/black**			
	08/79-07/82FD8	**Grey/black Grey/black**			
	08/79-07/82FD9	**Beige/brown Beige/brown**			

Model	Year	MG	SG	Illustration	Restrictions	UPD	7:24	27.10.2023
928	1978	8	08	808-020		738		

Pos	Part Number	Description	Remark	Qty	Model
	08/79-07/82BC4	beige Beige/brown			
	08/79-07/82BC5	beige brown/black			
1	928 521 001 30	seat, complete Leatherette Central section version: Fabric D - MJ 1980>> Discontinued part	left	1	
	08/79-07/82BD1	Blue/blue			
	08/79-07/82BD2	Brown-brown			
	08/79-07/82BD3	beige			
	08/79-07/82BD4	black/black			
	08/79-07/82BD5	Brown-beige			
(1)	928 521 002 30	seat, complete Leatherette Central section version: Fabric D - MJ 1980>> Discontinued part	right	1	
	08/79-07/82BD1	Blue/blue			
	08/79-07/82BD2	Brown-brown			
	08/79-07/82BD3	beige			
	08/79-07/82BD4	black/black			
	08/79-07/82BD5	Brown-beige			
1	928 521 001 30	seat, complete Leatherette Central section version: Tartan cloth D - MJ 1980>> Discontinued part	left	1	
	08/79-07/82BE1	blue Red-blue			
	08/79-07/82BE2	Black Red-blue			
	08/79-07/82BE3	blue Green-blue			
	08/79-07/82BE4	Black Green-blue			
	08/79-07/82BE5	Black Brown-beige			

Model	Year	MG	SG	Illustration	Restrictions	UPD	7:24	27.10.2023
928	1978	8	08	808-020		738		

Pos	Part Number	Description	Remark	Qty	Model
	08/79-07/82BE6	brown Brown-beige			
	08/79-07/82BE7	beige Brown-beige			
(1)	928 521 002 30	seat, complete Leatherette Central section version: Tartan cloth D - MJ 1980>> Discontinued part	right	1	
	08/79-07/82BE1	blue Red-blue			
	08/79-07/82BE2	Black Red-blue			
	08/79-07/82BE3	blue Green-blue			
	08/79-07/82BE4	Black Green-blue			
	08/79-07/82BE5	Black Brown-beige			
	08/79-07/82BE6	brown Brown-beige			
	08/79-07/82BE7	beige Brown-beige			
1A	928 521 001 31	seat, complete Leatherette Seat and backrest surface Berber fabric D - MJ 1981>> Discontinued part	left	1	
	08/80-07/82GE9	Grey/black Grey/black			
	08/80-07/82BD7	Blue/black Blue/black			
	08/80-07/82FE3	Beige/brown Beige/brown			
	08/80-07/82BD9	beige Beige/brown			
(1A)	928 521 002 31	seat, complete Leatherette Seat and backrest surface Berber fabric D - MJ 1981>> Discontinued part	right	1	

Model	Year	MG	SG	Illustration	Restrictions	UPD	7:24	27.10.2023
928	1978	8	08	808-020		738		

Pos	Part Number	Description	Remark	Qty	Model
	08/80-07/82GE9	Grey/black Grey/black			
	08/80-07/82BD7	Blue/black Blue/black			
	08/80-07/82FE3	Beige/brown Beige/brown			
	08/80-07/82BD9	beige Beige/brown			
2	911 521 371 00	Screw		2	
3	999 025 117 40	Washer 12,5 X 32 X 1		X	
4	911 521 547 00	Screw M 10 X 20		4	
5	911 521 359 02	Trim	left	1	
(5)	911 521 360 02	Trim	right	1	
6	911 521 571 00	Tensioning spring		2	
(7)	911 521 381 02	Cover Rotary knob for backrest adjustment comprising: POS. 7 POS. 8		2	
7	911 521 381 00	Covers		2	
8	911 521 383 00	Cover Discontinued part		2	
8	911 521 381 02	Cover		2	
9	311 881 607 A	Trim Actuating lever		2	
10	311 881 247	Clip		2	
(11)	113 881 633 E	Actuator button		2	
	08/77-07/8201C	Satin black	rightangled		
12	928 521 489 02	Seat rail Discontinued part	left	1	
(12)	928 521 490 02	Seat rail	right	1	
(13)	911 521 533 01	handle: seat longit. adjustm.		2	
	08/77-07/8201C	Satin black			

Model	Year	MG	SG	Illustration	Restrictions	UPD	7:24	27.10.2023
928	1978	8	08	808-020		738		

Pos	Part Number	Description	Remark	Qty	Model
14	944 521 491 00	Seat rail without: release lever See TPI GR.8 NR.34 Discontinued part		2	
14	944 521 491 00	Seat rail		2	
15	N 014 761 2	Socket head bolt with hexagon socket head M 6 X 12 Discontinued part		2	
15	900 119 129 01	Socket head bolt M 6 X 12		2	
16	N 012 006 4	spring ring B 6		16	
17	900 075 057 02	Hexagon bolt M 6 X 16		8	
17	900 075 057 03	Hexagon bolt M 6 X 16 No longer use the part here		8	
18	900 012 123 00	Pin A 2,5 X 12		2	
19	928 521 101 04	Threaded plate		8	

Model	Year	MG	SG	Illustration	Restrictions	UPD	7:25	27.10.2023
928	1978	8	08	808-025		738		

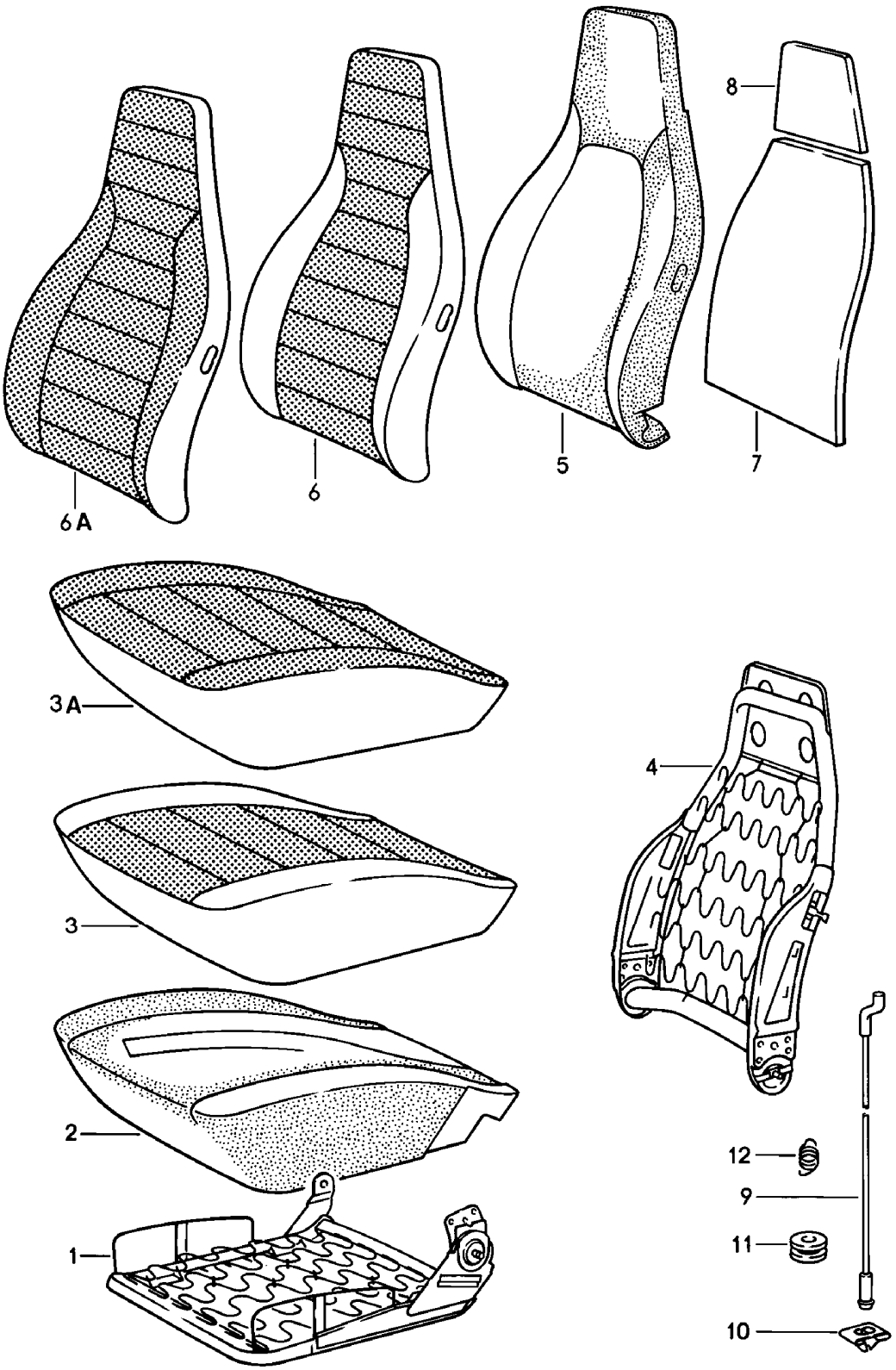

Model	Year	MG	SG	Illustration	Restrictions	UPD	7:25	27.10.2023
928	1978	8	08	808-025		738		

Pos	Part Number	Description	Remark	Qty	Model
		Front seats **Individual parts** **D - MJ 1980>>**			
1	**911 521 069 56**	**frame for seat** **D - MJ 1980>>**	**left**	**1**	
(1)	**911 521 070 56**	**frame for seat** **D - MJ 1980>>**	**right**	**1**	
2	**911 521 385 02**	**Foam part** **Seat cushion** **D - MJ 1980>>**	**left**	**1**	
(2)	**911 521 386 02**	**Foam part** **Seat cushion** **D - MJ 1980>>**	**right**	**1**	
3	**911 521 037 11**	**Seat cover** **Leatherette** **Central section version:** **Checker board velour** **D - MJ 1980>>** **Discontinued part**	**left**	**1**	
	08/79-07/82AC2	**brown** **brown/black**			
	08/79-07/82AC4	**Black** **brown/black**			
	08/79-07/82AC5	**Black** **Blue/black**			
	08/79-07/82BC1	**blue** **Blue/black**			
	08/79-07/82FD8	**Seat cover** **Grey/black**			
	08/79-07/82FD9	**Seat cover** **Beige/brown**			
	08/79-07/82BC4	**beige** **Beige/brown**			
	08/79-07/82BC5	**beige** **brown/black**			
(3)	**911 521 038 11**	**Seat cover** **Leatherette** **Central section version:** **Checker board velour** **D - MJ 1980>>** **Discontinued part**	**right**	**1**	
	08/79-07/82AC2	**brown** **brown/black**			
	08/79-07/82AC4	**Black** **brown/black**			

Model	Year	MG	SG	Illustration	Restrictions	UPD	7:25	27.10.2023
928	1978	8	08	808-025		738		

Pos	Part Number	Description	Remark	Qty	Model
	08/79-07/82AC5	Black Blue/black			
	08/79-07/82BC1	blue Blue/black			
	08/79-07/82FD8	Seat cover Grey/black			
	08/79-07/82FD9	Seat cover Beige/brown			
	08/79-07/82BC4	beige Beige/brown			
	08/79-07/82BC5	beige brown/black			
3	911 521 037 11	Seat cover Leatherette Central section version: Fabric D - MJ 1980>> Discontinued part	left	1	
	08/79-07/82BD1	Seat cover			
	08/79-07/82BD2	Seat cover			
	08/79-07/82BD3	beige			
	08/79-07/82BD4	Seat cover			
	08/79-07/82BD5	Seat cover			
(3)	911 521 038 11	Seat cover Leatherette Central section version: Fabric D - MJ 1980>> Discontinued part	right	1	
	08/79-07/82BD1	Seat cover			
	08/79-07/82BD2	Seat cover			
	08/79-07/82BD3	beige			
	08/79-07/82BD4	Seat cover			
	08/79-07/82BD5	Seat cover			
3	911 521 037 11	Seat cover Leatherette Central section version: Tartan cloth D - MJ 1980>> Discontinued part	left	1	
	08/79-07/82BE1	blue Red-blue			

Model	Year	MG	SG	Illustration	Restrictions	UPD	7:25	27.10.2023
928	1978	8	08	808-025		738		

Pos	Part Number	Description	Remark	Qty	Model
	08/79-07/82BE2	Black Red-blue			
	08/79-07/82BE3	blue Green-blue			
	08/79-07/82BE4	Black Green-blue			
	08/79-07/82BE5	Black Brown-beige			
	08/79-07/82BE6	brown Brown-beige			
	08/79-07/82BE7	beige Brown-beige			
(3)	911 521 038 11	Seat cover Leatherette Central section version: Tartan cloth D - MJ 1980>> Discontinued part	right	1	
	08/79-07/82BE1	blue Red-blue			
	08/79-07/82BE2	Black Red-blue			
	08/79-07/82BE3	blue Green-blue			
	08/79-07/82BE4	Black Green-blue			
	08/79-07/82BE5	Black Brown-beige			
	08/79-07/82BE6	brown Brown-beige			
	08/79-07/82BE7	beige Brown-beige			
3A	911 521 037 12	Seat cover Leatherette Berber fabric D - MJ 1980>> Discontinued part	left	1	
	08/79-07/82GE9	Seat cover Grey/black			
	08/79-07/82BD7	Blue/black Blue/black			
	08/79-07/82FE3	Seat cover Beige/brown			

Model	Year	MG	SG	Illustration	Restrictions	UPD	7:25	27.10.2023
928	1978	8	08	808-025		738		

Pos	Part Number	Description	Remark	Qty	Model
	08/79-07/82BD9	beige Beige/brown			
(3A)	911 521 038 12	Seat cover Leatherette Berber fabric D - MJ 1980>> Discontinued part	right	1	
	08/79-07/82GE9	Seat cover Grey/black			
	08/79-07/82BD7	Blue/black Blue/black			
	08/79-07/82FE3	Seat cover Beige/brown			
	08/79-07/82BD9	beige Beige/brown			
4	911 521 027 58	backrest frame D - MJ 1980>>	left	1	
(4)	911 521 028 58	backrest frame D - MJ 1980>>	right	1	
5	911 521 393 02	Foam part Backrest D - MJ 1980>>		2	
6	911 521 072 21	Backrest cover Leatherette Central section version: Checker board velour D - MJ 1980>> Discontinued part		2	
	08/79-07/82AC2	brown brown/black			
	08/79-07/82AC4	Black brown/black			
	08/79-07/82AC5	Black Blue/black			
	08/79-07/82BC1	blue Blue/black			
	08/79-07/82FD8	Grey/black Grey/black			
	08/79-07/82FD9	brown Beige/brown			
	08/79-07/82BC4	beige Beige/brown			
	08/79-07/82BC5	beige brown/black			

Model	Year	MG	SG	Illustration	Restrictions	UPD	7:25	27.10.2023
928	1978	8	08	808-025		738		

Pos	Part Number	Description	Remark	Qty	Model
6	911 521 072 21	Backrest cover Leatherette Central section version: Fabric D - MJ 1980>> Discontinued part		2	
	08/79-07/82BD1	dark blue			
	08/79-07/82BD2	Brown/brown			
	08/79-07/82BD3	beige			
	08/79-07/82BD4	black/black			
	08/79-07/82BD5	Brown/beige			
6	911 521 072 21	Backrest cover Leatherette Central section version: Tartan cloth D - MJ 1980>> Discontinued part		2	
	08/79-07/82BE1	blue Red-blue			
	08/79-07/82BE2	Black Red-blue			
	08/79-07/82BE3	blue Green-blue			
	08/79-07/82BE4	Black Green-blue			
	08/79-07/82BE5	Black Brown-beige			
	08/79-07/82BE6	brown Brown-beige			
	08/79-07/82BE7	beige Brown-beige			
6A	911 521 072 22	Backrest cover Leatherette Berber fabric D - MJ 1980>> Discontinued part		2	
	08/79-07/82GE9	Black Grey/black			
	08/79-07/82BD7	Blue/black Blue/black			
	08/79-07/82FE3	brown Beige/brown			

Model	Year	MG	SG	Illustration	Restrictions	UPD	7:25	27.10.2023
928	1978	8	08	808-025		738		

Pos	Part Number	Description	Remark	Qty	Model
	08/79-07/82BD9	beige Beige/brown			
7	911 521 575 00	Filler piece backrest D - MJ 1980>>		2	
8	911 521 435 00	Filler piece D - MJ 1980>>		2	
9	911 521 361 00	Wire pull D - MJ 1980>> Discontinued part		2	
9	911 521 361 02	Wire pull D - MJ 1980>>		2	
10	911 521 369 00	terminal Wire pull D - MJ 1980>>		2	
11	911 521 343 00	guide bush Wire pull D - MJ 1980>>		2	
12	311 881 287 A	tension spring Actuating lever D - MJ 1980>>		2	

Model	Year	MG	SG	Illustration	Restrictions	UPD	7:25	27.10.2023
928	1978	8	08	808-030		738		

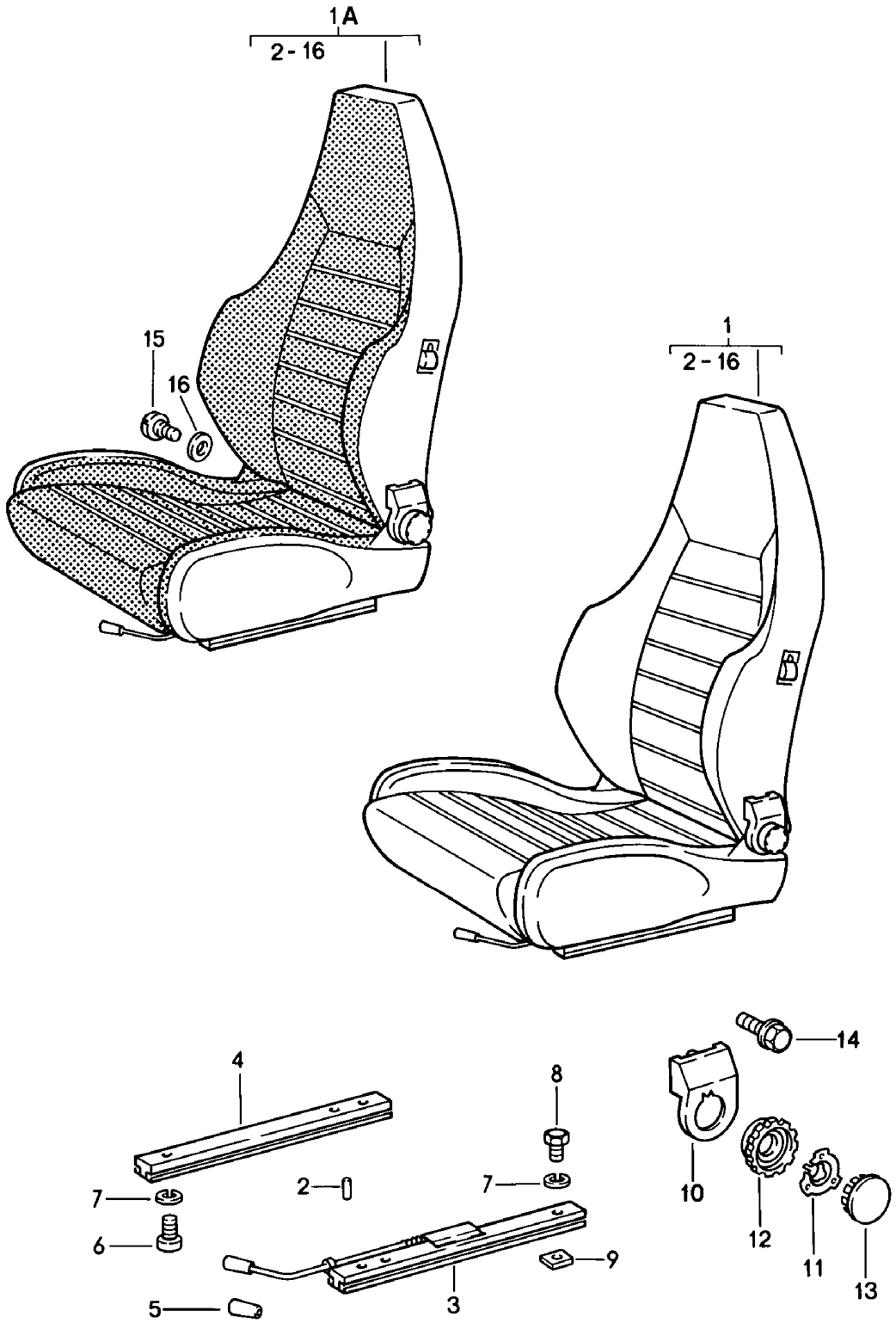

Model	Year	MG	SG	Illustration	Restrictions	UPD	7:25	27.10.2023
928	1978	8	08	808-030		738		

Pos	Part Number	Description	Remark	Qty	Model
		sports seat (complete) D - MJ 1980>>			PR:409,410
1	911 521 007 61	sports seat Leather Discontinued part	left	1	PR:409
	08/79-07/821AJ	Black			
	08/79-07/823NG	brown			
	08/79-07/8230B	dark blue			
	08/79-07/8250B	beige			
	08/79-07/8280S	Can-can-red			
	08/79-07/8295S	Papyrus			
	08/79-07/8260S	Hannibal grey			
	08/79-07/8220S	Leather			
(1)	911 521 008 61	sports seat Leather Discontinued part	right	1	PR:409
	08/79-07/821AJ	Black			
	08/79-07/823NG	brown			
	08/79-07/8230B	dark blue			
	08/79-07/8250B	beige			
	08/79-07/8280S	Can-can-red			
	08/79-07/8295S	Papyrus			
	08/79-07/8260S	Hannibal grey			
	08/79-07/8220S	Leather			
1A	911 521 007 06	sports seat Leatherette Seat and backrest surface Berber fabric Discontinued part	left	1	PR:410
	08/79-07/82GE9	Black Grey/black			
	08/79-07/82BD7	blue Blue/black			
	08/79-07/82FE3	brown Beige/brown			
	08/79-07/82BD9	beige Beige/brown			

Model	Year	MG	SG	Illustration	Restrictions	UPD	7:25	27.10.2023
928	1978	8	08	808-030		738		

Pos	Part Number	Description	Remark	Qty	Model
(1A)	911 521 008 06	sports seat Leatherette Seat and backrest surface Berber fabric Discontinued part	right	1	PR:410
	08/79-07/82GE9	Black Grey/black			
	08/79-07/82BD7	blue Blue/black			
	08/79-07/82FE3	brown Beige/brown			
	08/79-07/82BD9	beige Beige/brown			
2	900 012 123 00	Pin A 2,5 X 12		2	
3	928 521 489 02	Seat rail Discontinued part	left	1	
(3)	928 521 490 02	Seat rail with: Locking mechanism Discontinued part	right	1	
4	944 521 491 00	Seat rail Discontinued part		2	
4	944 521 491 00	Seat rail without: Locking mechanism See TPI GR.8 NR.34		2	
5	911 521 533 00	handle: seat longit. adjustm. Discontinued part		2	
(5)	911 521 533 01	handle: seat longit. adjustm.		2	
	08/79-07/8201C	Satin black			
6	N 014 761 2	Socket head bolt with hexagon socket head M 6 X 12 Discontinued part		8	
6	900 119 129 01	Socket head bolt M 6 X 12		8	
7	N 012 006 4	spring ring B 6		16	
8	900 075 057 03	Hexagon bolt No longer use the part here		8	
8	900 075 057 02	Hexagon bolt M 6 X 16		8	

Model	Year	MG	SG	Illustration	Restrictions	UPD	7:25	27.10.2023
928	1978	8	08	808-030		738		

Pos	Part Number	Description	Remark	Qty	Model
8	900 075 057 03	Hexagon bolt M 6 X 16		8	
9	928 521 101 04	Threaded plate		8	
10	911 521 359 02	Trim	left	1	
(10)	911 521 360 02	Trim	right	1	
11	911 521 571 00	Tensioning spring		2	
(12)	911 521 381 02	Cover Rotary knob for backrest adjustment comprising: POS. 12 POS. 13		2	
12	911 521 381 00	Covers		2	
13	911 521 383 00	Cover Discontinued part		2	
13	911 521 381 02	Cover		2	
14	911 521 371 00	Screw	inner	2	
15	911 521 547 00	Screw M 10 X 20		4	
16	999 025 117 40	Washer 12,5 X 32 X 1		X	

Model	Year	MG	SG	Illustration	Restrictions	UPD	7:25	27.10.2023
928	1978	8	08	808-035		738		

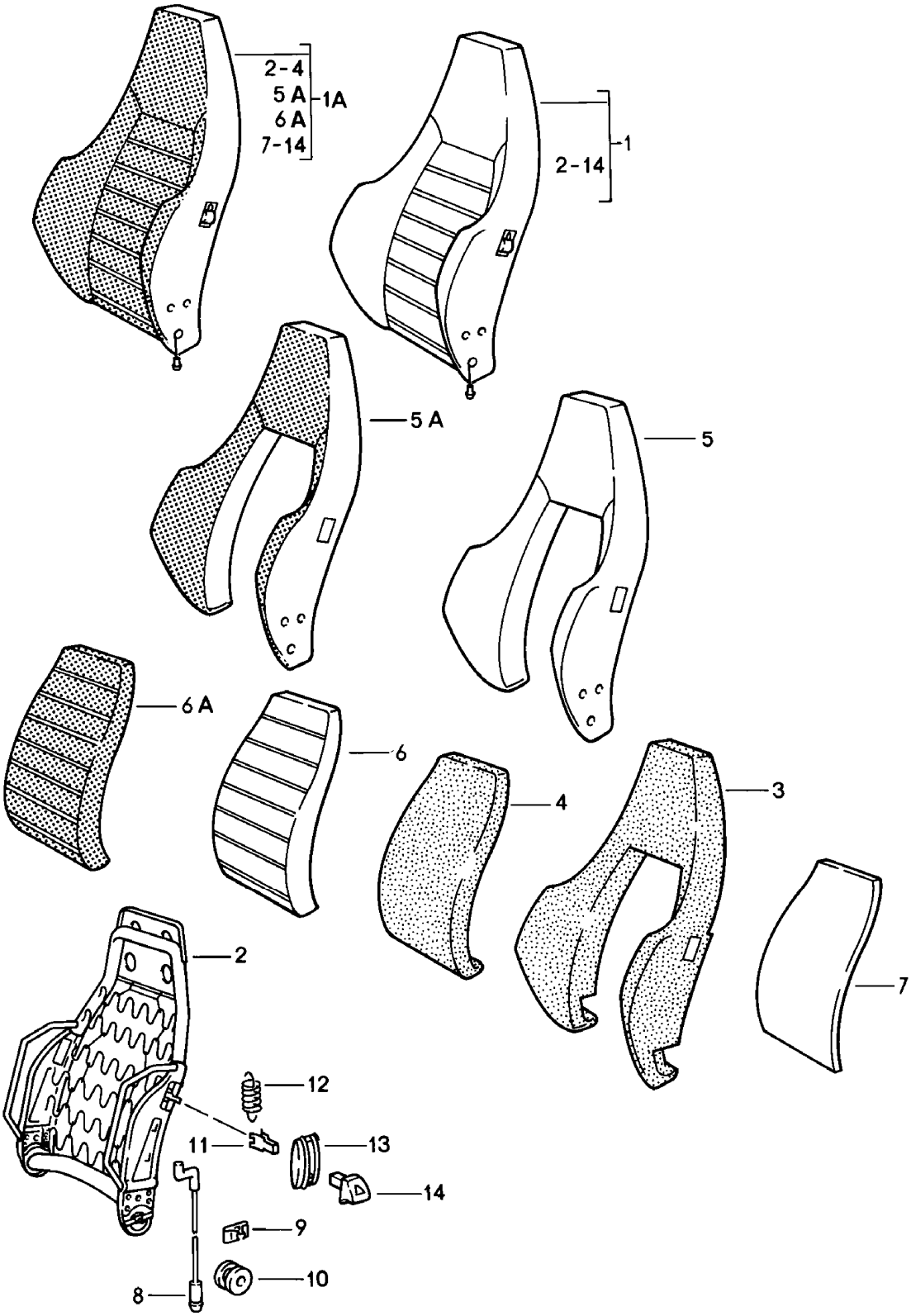

Model	Year	MG	SG	Illustration	Restrictions	UPD	7:25	27.10.2023
928	1978	8	08	808-035		738		

Pos	Part Number	Description	Remark	Qty	Model
		sports seat backrest Individual parts D - MJ 1980>>			PR:409,410
1	911 521 603 50	Backrest Leather Discontinued part	left	1	PR:409
	08/79-07/821AJ	Black			
	08/79-07/823NG	brown			
	08/79-07/8230B	dark blue			
	08/79-07/8250B	beige			
	08/79-07/8280S	Can-can-red			
	08/79-07/8295S	Papyrus			
	08/79-07/8260S	Hannibal grey			
	08/79-07/8220S	Leather			
(1)	911 521 604 50	Backrest Leather Discontinued part	right	1	PR:409
	08/79-07/821AJ	Black			
	08/79-07/823NG	brown			
	08/79-07/8230B	dark blue			
	08/79-07/8250B	beige			
	08/79-07/8280S	Can-can-red			
	08/79-07/8295S	Papyrus			
	08/79-07/8260S	Hannibal grey			
	08/79-07/8220S	Leather			
1A	911 521 603 06	backrest Leatherette Berber fabric Discontinued part	left	1	PR:410
	08/79-07/82GE9	Black Grey/black			
	08/79-07/82BD7	backrest Blue/black			
	08/79-07/82FE3	brown Beige/brown			
	08/79-07/82BD9	beige Beige/brown			

Model	Year	MG	SG	Illustration	Restrictions	UPD	7:25	27.10.2023
928	1978	8	08	808-035		738		

Pos	Part Number	Description	Remark	Qty	Model
(1A)	911 521 604 06	backrest Leatherette Berber fabric Discontinued part	right	1	PR:410
	08/79-07/82GE9	Black Grey/black			
	08/79-07/82BD7	backrest Blue/black			
	08/79-07/82FE3	brown Beige/brown			
	08/79-07/82BD9	beige Beige/brown			
2	911 521 613 02	backrest frame Discontinued part	left	1	
2	911 521 613 02	backrest frame	left	1	
(2)	911 521 614 02	backrest frame Discontinued part	right	1	
(2)	911 521 614 02	backrest frame	right	1	
3	911 521 751 02	Foam part Foam sect. for rest side supp.		2	
4	911 521 104 02	Foam part backrest		2	
5	911 521 072 70	Rest side support cover Leather Discontinued part		2	PR:409
	08/79-07/821AJ	Black			
	08/79-07/823NG	brown			
	08/79-07/8230B	dark blue			
	08/79-07/8250B	beige			
	08/79-07/8280S	Can-can-red			
	08/79-07/8295S	Papyrus			
	08/79-07/8260S	Hannibal grey			
	08/79-07/8220S	Leather			
5A	911 521 072 06	Rest side support cover Leatherette Berber fabric Discontinued part		2	PR:410
	08/79-07/82GE6	Black Grey/black			

Model	Year	MG	SG	Illustration	Restrictions	UPD	7:25	27.10.2023
928	1978	8	08	808-035		738		

Pos	Part Number	Description	Remark	Qty	Model
	08/79-07/82BD7	blue Blue/black			
	08/79-07/82FE3	brown Beige/brown			
	08/79-07/82BD9	beige Beige/brown			
6	911 521 403 50	Backrest cover Leather Discontinued part		2	PR:409
	08/79-07/821AJ	Black			
	08/79-07/823NG	brown			
	08/79-07/8230B	dark blue			
	08/79-07/8250B	beige			
	08/79-07/8280S	Can-can-red			
	08/79-07/8295S	Papyrus			
	08/79-07/8260S	Hannibal grey			
	08/79-07/8220S	Leather			
6A	911 521 403 06	Backrest cover Berber fabric Discontinued part		2	PR:410
	08/79-07/821GB	Grey/black			
	08/79-07/8237B	Blue/black			
	08/79-07/828NB	Beige/brown			
7	911 521 575 00	Filler piece		2	
8	911 521 361 00	Wire pull Discontinued part		2	
8	911 521 361 02	Wire pull		2	
9	911 521 369 00	terminal		2	
10	911 521 343 00	guide bush		2	
11	311 881 247	Clip		2	
12	311 881 287 A	tension spring Actuating lever		2	
13	911 521 815 00	Rosette Actuating lever		2	
	08/79-07/8201C	Satin black			
14	911 521 817 00	Actuator button		2	

Model	Year	MG	SG	Illustration	Restrictions	UPD	7:25	27.10.2023
928	1978	8	08	808-035		738		

Pos	Part Number	Description	Remark	Qty	Model
	08/79-07/8201C	**Satin black**			

Model	Year	MG	SG	Illustration	Restrictions	UPD	7:25	27.10.2023
928	1978	8	08	808-040		738		

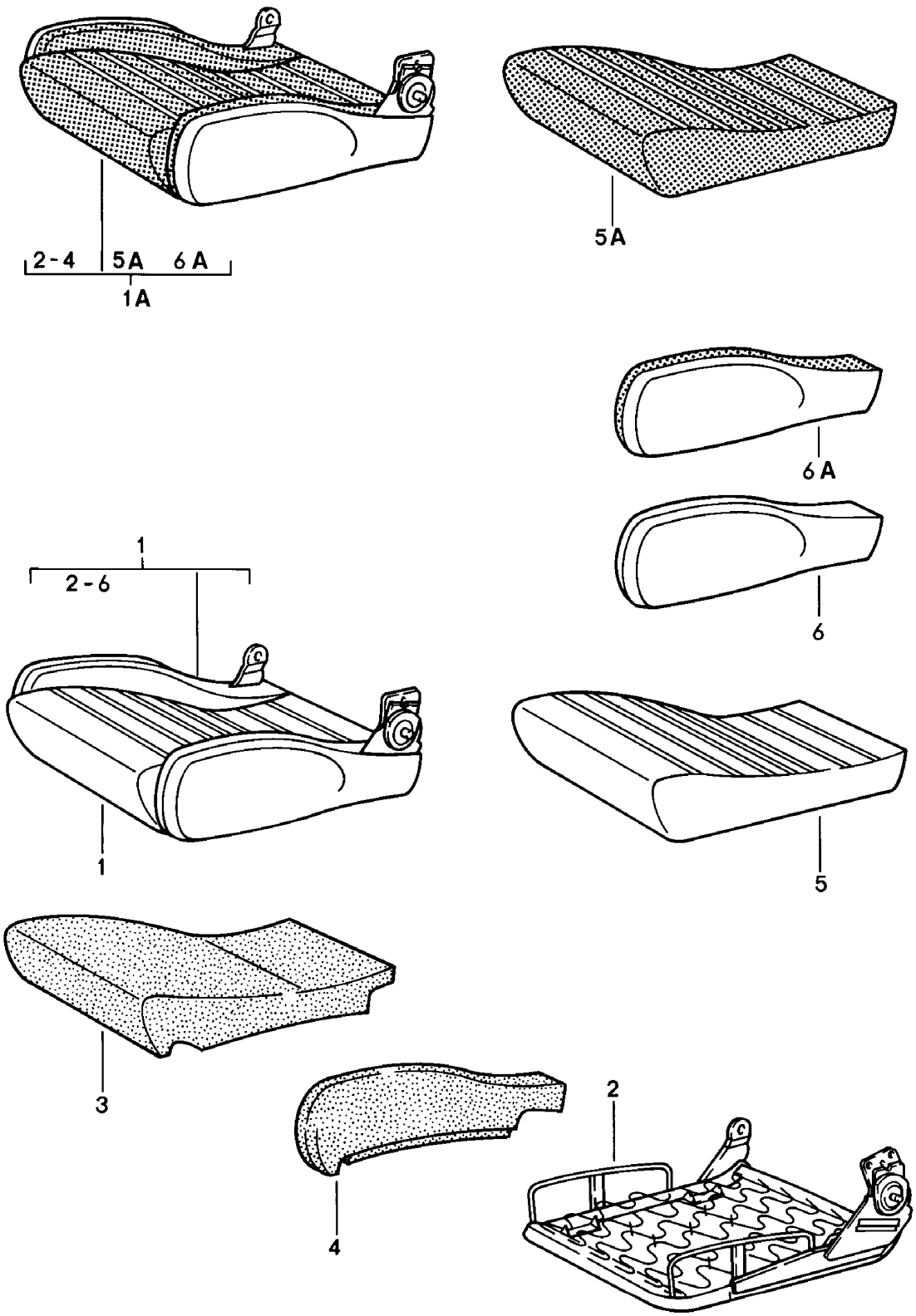

Model	Year	MG	SG	Illustration	Restrictions	UPD	7:25	27.10.2023
928	1978	8	08	808-040		738		

Pos	Part Number	Description	Remark	Qty	Model
		sports seat **Seat cushion** **Individual parts** **D - MJ 1980>>**			**PR:409,410**
1	**911 521 605 50**	**Seat cushion** **Leather** **Discontinued part**	**left**	**1**	**PR:409**
	08/79-07/821AJ	**Black**			
	08/79-07/823NG	**brown**			
	08/79-07/8230B	**dark blue**			
	08/79-07/8250B	**beige**			
	08/79-07/8280S	**Can-can-red**			
	08/79-07/8295S	**Papyrus**			
	08/79-07/8260S	**Hannibal grey**			
	08/79-07/8220S	**Leather**			
(1)	**911 521 606 50**	**Seat cushion** **Leather** **Discontinued part**	**right**	**1**	**PR:409**
	08/79-07/821AJ	**Black**			
	08/79-07/823NG	**brown**			
	08/79-07/8230B	**dark blue**			
	08/79-07/8250B	**beige**			
	08/79-07/8280S	**Can-can-red**			
	08/79-07/8295S	**Papyrus**			
	08/79-07/8260S	**Hannibal grey**			
	08/79-07/8220S	**Leather**			
1A	**911 521 605 06**	**Seat cushion** **Leatherette** **Seat cover** **Berber fabric** **Discontinued part**	**left**	**1**	**PR:410**
	08/79-07/82GE9	**Seat cushion** **Grey/black**			
	08/79-07/82BD7	**Seat cushion** **Blue/black**			
	08/79-07/82FE3	**Seat cushion** **Beige/brown**			

Model	Year	MG	SG	Illustration	Restrictions	UPD	7:25	27.10.2023
928	1978	8	08	808-040		738		

Pos	Part Number	Description	Remark	Qty	Model
	08/79-07/82BD9	beige Beige/brown			
(1A)	911 521 606 06	Seat cushion Leatherette Seat cover Berber fabric Discontinued part	right	1	PR:410
	08/79-07/82GE9	Seat cushion Grey/black			
	08/79-07/82BD7	Seat cushion Blue/black			
	08/79-07/82FE3	Seat cushion Beige/brown			
	08/79-07/82BD9	beige Beige/brown			
2	911 521 621 01	frame for seat	left	1	
(2)	911 521 622 01	frame for seat	right	1	
3	911 521 697 02	Foam part Seat cushion		2	
4	911 521 683 02	Foam part	left	1	
(4)	911 521 654 02	Foam part Seat	right left	1	
(4)	911 521 653 02	Foam part	left	1	
(4)	911 521 684 02	Foam part Seat	right right	1	
5	911 521 439 50	Seat cover Leather Discontinued part		2	PR:409
	08/79-07/821AJ	Black			
	08/79-07/823NG	brown			
	08/79-07/8230B	dark blue			
	08/79-07/8250B	beige			
	08/79-07/8280S	Can-can-red			
	08/79-07/8295S	Papyrus			
	08/79-07/8260S	Hannibal grey			
	08/79-07/8220S	Leather			
5A	911 521 439 06	Seat cover Berber fabric Discontinued part		2	PR:410

Model	Year	MG	SG	Illustration	Restrictions	UPD	7:25	27.10.2023
928	1978	8	08	808-040		738		

Pos	Part Number	Description	Remark	Qty	Model
	08/79-07/821GB	Grey/black			
	08/79-07/8237B	Blue/black			
	08/79-07/828NB	Beige/brown			
6	911 521 631 50	Padded upholstery Seat Leather Discontinued part	left left	1	PR:409
	08/79-07/821AJ	Black			
	08/79-07/823NG	brown			
	08/79-07/8230B	dark blue			
	08/79-07/8250B	beige			
	08/79-07/8280S	Can-can-red			
	08/79-07/8295S	Papyrus			
	08/79-07/8260S	Hannibal grey			
	08/79-07/8220S	Leather			
(6)	911 521 632 50	Padded upholstery Seat Leather Discontinued part	right left	1	PR:409
	08/79-07/821AJ	Black			
	08/79-07/823NG	brown			
	08/79-07/8230B	dark blue			
	08/79-07/8250B	beige			
	08/79-07/8280S	Can-can-red			
	08/79-07/8295S	Papyrus			
	08/79-07/8260S	Hannibal grey			
	08/79-07/8220S	Leather			
(6)	911 521 633 50	Padded upholstery Seat Leather Discontinued part	left right	1	PR:409
	08/79-07/821AJ	Black			
	08/79-07/823NG	brown			
	08/79-07/8230B	dark blue			
	08/79-07/8250B	beige			

Model	Year	MG	SG	Illustration	Restrictions	UPD	7:25	27.10.2023
928	1978	8	08	808-040		738		

Pos	Part Number	Description	Remark	Qty	Model
	08/79-07/8280S	Can-can-red			
	08/79-07/8295S	Papyrus			
	08/79-07/8260S	Hannibal grey			
	08/79-07/8220S	Leather			
(6)	911 521 634 50	Padded upholstery Seat Leather Discontinued part	right right	1	PR:409
	08/79-07/821AJ	Black			
	08/79-07/823NG	brown			
	08/79-07/8230B	dark blue			
	08/79-07/8250B	beige			
	08/79-07/8280S	Can-can-red			
	08/79-07/8295S	Papyrus			
	08/79-07/8260S	Hannibal grey			
	08/79-07/8220S	Leather			
6A	911 521 631 06	Padded upholstery Seat Leatherette Seat cover Berber fabric Discontinued part	left left	1	PR:410
	08/79-07/82GE9	Seat side bolster cover Grey/black			
	08/79-07/82BD7	blue Blue/black			
	08/79-07/82FE3	Seat side bolster cover Beige/brown			
	08/79-07/82BD9	beige Beige/brown			
(6A)	911 521 632 06	Padded upholstery Seat Leatherette Seat cover Berber fabric Discontinued part	right left	1	PR:410
	08/79-07/82GE9	Seat side bolster cover Grey/black			
	08/79-07/82BD7	blue Blue/black			

Model	Year	MG	SG	Illustration	Restrictions	UPD	7:25	27.10.2023
928	1978	8	08	808-040		738		

Pos	Part Number	Description	Remark	Qty	Model
	08/79-07/82FE3	Seat side bolster cover Beige/brown			
	08/79-07/82BD9	beige Beige/brown			
(6A)	911 521 633 06	Padded upholstery Seat Leatherette Seat cover Berber fabric Discontinued part	left right	1	PR:410
	08/79-07/82GE9	Seat side bolster cover Grey/black			
	08/79-07/82BD7	blue Blue/black			
	08/79-07/82FE3	Seat side bolster cover Beige/brown			
	08/79-07/82BD9	beige Beige/brown			
(6A)	911 521 634 06	Padded upholstery Seat Leatherette Seat cover Berber fabric Discontinued part	right right	1	PR:410
	08/79-07/82GE9	Seat side bolster cover Grey/black			
	08/79-07/82BD7	blue Blue/black			
	08/79-07/82FE3	Seat side bolster cover Beige/brown			
	08/79-07/82BD9	beige Beige/brown			

Model	Year	MG	SG	Illustration	Restrictions	UPD	7:26	27.10.2023
928	1978	8	08	808-045		738		

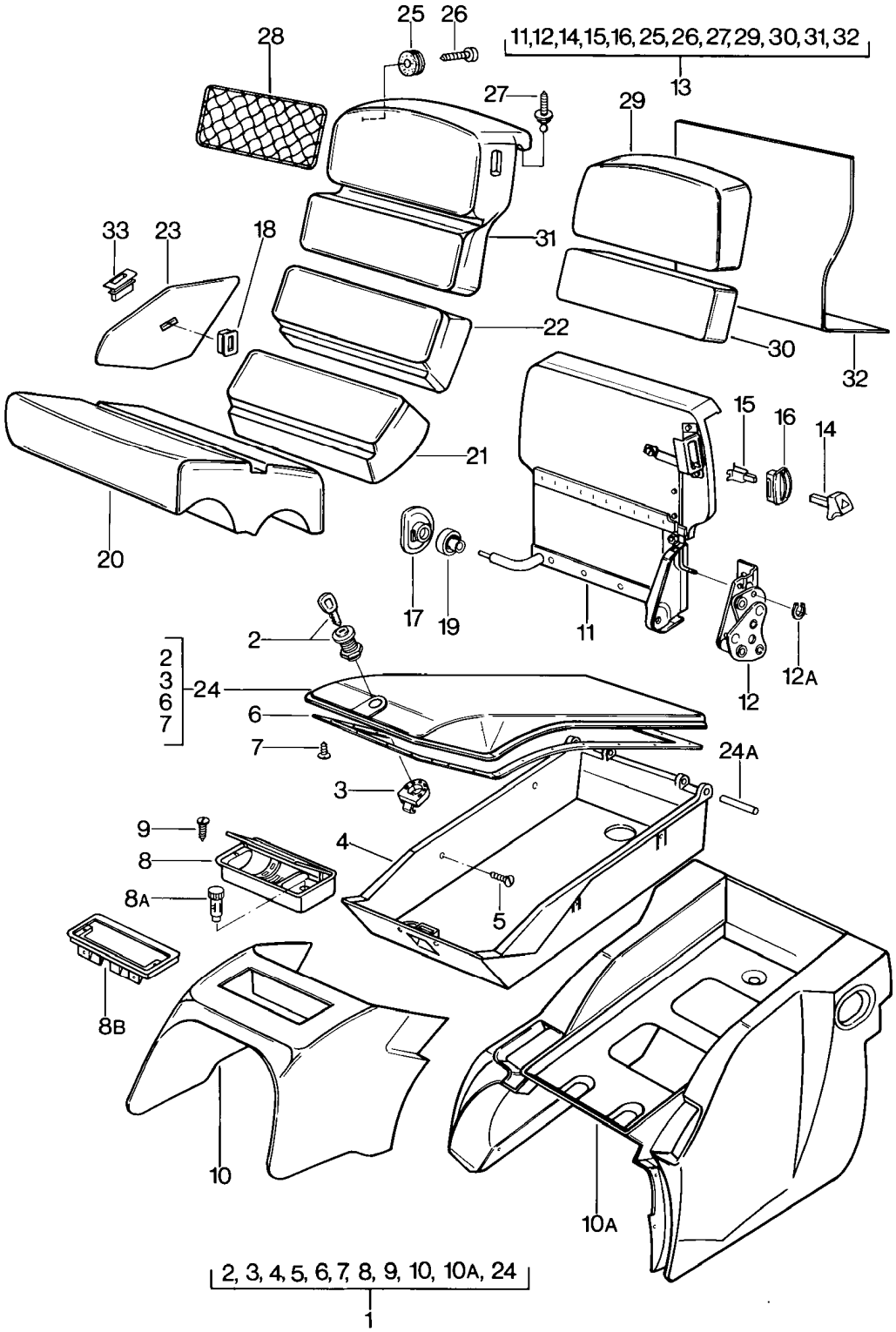

Model	Year	MG	SG	Illustration	Restrictions	UPD	7:26	27.10.2023
928	1978	8	08	808-045		738		

Pos	Part Number	Description	Remark	Qty	Model
		Emergency seat with:			
		Stowage box			
1	**928 522 065 02**	**Stowage box Leatherette Discontinued part**		**1**	
	08/77-07/8240D	**Cork**			
	08/77-07/8220B	**Dark green**			
	08/77-07/8221S	**brown**			
	08/77-07/8205T	**Black**			
	08/77-07/8230B	**blue**			
	08/77-07/8250B	**beige**			
(1)	**928 522 065 03**	**fresh air box Leatherette Discontinued part**		**1**	**AUT.**
	08/77-07/8240D	**Cork**			
	08/77-07/8220B	**Dark green**			
	08/77-07/8221S	**brown**			
	08/77-07/8205T	**Black**			
	08/77-07/8230B	**blue**			
	08/77-07/8250B	**beige**			
1	**928 522 065 50**	**Stowage box Leather Discontinued part**		**1**	
	08/77-07/8240D	**Cork**			
	08/77-07/8220B	**Dark green**			
	08/77-07/823NG	**brown**			
	08/77-07/821AJ	**Black**			
	08/77-07/8230B	**blue**			
	08/77-07/8250B	**beige**			
	08/77-07/822LB	**wine red**			
(1)	**928 522 065 51**	**Stowage box Leather Discontinued part**		**1**	**AUT.**
	08/77-07/8240D	**Cork**			
	08/77-07/8220B	**Dark green**			

Model	Year	MG	SG	Illustration	Restrictions	UPD	7:26	27.10.2023
928	1978	8	08	808-045		738		

Pos	Part Number	Description	Remark	Qty	Model
	08/77-07/823NG	brown			
	08/77-07/821AJ	Black			
	08/77-07/8230B	blue			
	08/77-07/8250B	beige			
	08/77-07/822LB	wine red			
-	N 014 139 1B	fillister hd. bolt		3	
-	N 014 139 11	fillister hd. bolt M 6 X 12 Discontinued part		3	
-	N 014 139 1B	fillister hd. bolt M 6 X 12		3	
-	900 089 005 02	Washer 6		3	
-	N 012 226 5	Spring washer B 6		3	
2	928 522 015 02	lock cylinder with keys lock with keys		1	
3	928 522 069 02	catch		1	
4	928 522 279 02	Insert		1	
	08/77-07/8270B	Black			
5	900 144 017 07	panel screw B 2,9 X 13		6	
6	928 522 269 02	Cover trim Cover		1	
7	900 143 066 07	Screw ST 4,2 X 9,5		19	
-	999 141 010 07	countersunk bolt 7 X 7		14	
8	928 552 060 03	ashtray		1	
8A	928 652 103 00	Cigarette lighter		1	
8B	928 522 277 03	Ashtray insert for		1	
9	900 144 017 07	panel screw B 2,9 X 13		2	
10	928 522 063 02	Stowage box Leatherette Discontinued part	front	1	

Model	Year	MG	SG	Illustration	Restrictions	UPD	7:26	27.10.2023
928	1978	8	08	808-045		738		

Pos	Part Number	Description	Remark	Qty	Model
	08/77-07/8240D	Cork			
	08/77-07/8220B	Dark green			
	08/77-07/8221S	brown			
	08/77-07/8205T	Black			
	08/77-07/8230B	blue			
	08/77-07/8250B	beige			
(10)	928 522 063 03	Stowage box Leatherette Discontinued part	front	1	AUT.
	08/77-07/8240D	Cork			
	08/77-07/8220B	Dark green			
	08/77-07/8221S	brown			
	08/77-07/8205T	Black			
	08/77-07/8230B	blue			
	08/77-07/8250B	beige			
10	928 522 063 50	Stowage box Leather	front	1	
	08/77-07/8240D	Cork			
	08/77-07/8220B	Dark green			
	08/77-07/823NG	brown			
	08/77-07/821AJ	Black			
	08/77-07/8230B	blue			
	08/77-07/8250B	beige			
	08/77-07/8280S	Can-can-red			
	08/77-07/8295S	Papyrus			
	08/77-07/8260S	Hannibal grey			
	08/77-07/8220S	Leather			
	08/77-07/822LB	wine red			
(10)	928 522 063 51	Stowage box Leather	front	1	AUT.
	08/77-07/8240D	Cork			
	08/77-07/8220B	Dark green			
	08/77-07/823NG	brown			

Model	Year	MG	SG	Illustration	Restrictions	UPD	7:26	27.10.2023
928	1978	8	08	808-045		738		

Pos	Part Number	Description	Remark	Qty	Model
	08/77-07/821AJ	Black			
	08/77-07/8230B	blue			
	08/77-07/8250B	beige			
	08/77-07/8280S	Can-can-red			
	08/77-07/8295S	Papyrus			
	08/77-07/8260S	Hannibal grey			
	08/77-07/8220S	Leather			
	08/77-07/822LB	wine red			
10A	928 522 067 02	Stowage box Leatherette Discontinued part	rear	1	
	08/77-07/8240D	Cork			
	08/77-07/8220B	Dark green			
	08/77-07/8221S	brown			
	08/77-07/8205T	Black			
	08/77-07/8230B	blue			
	08/77-07/8250B	beige			
(10A)	928 522 067 03	fresh air box Leatherette Discontinued part	rear	1	AUT.
	08/77-07/8240D	Cork			
	08/77-07/8220B	Dark green			
	08/77-07/8221S	brown			
	08/77-07/8205T	Black			
	08/77-07/8230B	blue			
	08/77-07/8250B	beige			
(10A)	928 522 067 05	Stowage box Leatherette	rear	1	AUT.
	08/77-07/8240D	Cork			
	08/77-07/8220B	Dark green			
	08/77-07/8221S	brown			
	08/77-07/8205T	Black			
	08/77-07/8230B	blue			

Model	Year	MG	SG	Illustration	Restrictions	UPD	7:26	27.10.2023
928	1978	8	08	808-045		738		

Pos	Part Number	Description	Remark	Qty	Model
	08/77-07/8250B	beige			
10A	928 522 067 50	Stowage box Leather	rear	1	
	08/77-07/8240D	Cork			
	08/77-07/8220B	Dark green			
	08/77-07/823NG	brown			
	08/77-07/821AJ	Black			
	08/77-07/8230B	blue			
	08/77-07/8250B	beige			
	08/77-07/8280S	Can-can-red			
	08/77-07/8295S	Papyrus			
	08/77-07/8260S	Hannibal grey			
	08/77-07/8220S	Leather			
	08/77-07/822LB	wine red			
(10A)	928 522 067 51	Stowage box Leather Discontinued part	rear	1	AUT.
	08/77-07/8240D	Cork			
	08/77-07/8220B	Dark green			
	08/77-07/823NG	brown			
	08/77-07/821AJ	Black			
	08/77-07/8230B	blue			
	08/77-07/8250B	beige			
	08/77-07/8280S	Can-can red/black			
	08/77-07/8295S	Papyrus			
	08/77-07/8260S	Hannibal grey			
	08/77-07/8220S	Mint green			
	08/77-07/822LB	wine red			
(10A)	928 522 067 55	Stowage box Leather	rear	1	AUT.
	08/77-07/8240D	Cork			
	08/77-07/8220B	Dark green			
	08/77-07/823NG	brown			

Model	Year	MG	SG	Illustration	Restrictions	UPD	7:26	27.10.2023
928	1978	8	08	808-045		738		

Pos	Part Number	Description	Remark	Qty	Model
	08/77-07/821AJ	Black			
	08/77-07/8230B	blue			
	08/77-07/8250B	beige			
	08/77-07/8280S	Can-can-red			
	08/77-07/8295S	Papyrus			
	08/77-07/8260S	Hannibal grey			
	08/77-07/8220S	Leather			
	08/77-07/822LB	wine red			
11	928 522 013 02	backrest frame	left	1	
(11)	928 522 014 02	backrest frame	right	1	
12	928 522 085 03	fitting for bench seat	left	1	
(12)	928 522 086 03	fitting for bench seat	right	1	
12A	900 116 005 02	Retaining washer 7		2	
(13)	928 522 005 03	Back seat backrest Leatherette Checker board velour Discontinued part	left	1	
	08/77-07/82AG4	Cork brown/black			
	08/77-07/82AE1	Dark green beige/black			
	08/77-07/82AE2	brown brown/black			
	08/77-07/82AE3	Black beige/black			
	08/77-07/82AE4	Black brown/black			
	08/77-07/82AE5	Black Blue/black			
	08/77-07/82AE6	Cork beige/black			
	08/77-07/82AE7	Black black/white			
13	928 522 006 03	Back seat backrest Leatherette Checker board velour Discontinued part	right	1	

Model	Year	MG	SG	Illustration	Restrictions	UPD	7:26	27.10.2023
928	1978	8	08	808-045		738		

Pos	Part Number	Description	Remark	Qty	Model
	08/77-07/82AG4	Cork brown/black			
	08/77-07/82AE1	Dark green beige/black			
	08/77-07/82AE2	brown brown/black			
	08/77-07/82AE3	Black beige/black			
	08/77-07/82AE4	Black brown/black			
	08/77-07/82AE5	Black Blue/black			
	08/77-07/82AE6	Cork beige/black			
	08/77-07/82AE7	Black black/white			
(13)	928 522 005 03	Back seat backrest Leatherette Pin stripe velour Discontinued part	left	1	
	08/77-07/82AE8	Cork/cork			
	08/77-07/82AE9	Black/cork			
	08/77-07/82AG1	Dark green/cork			
	08/77-07/82AG2	Black/lobster			
	08/77-07/82AG3	black/black			
13	928 522 006 03	Back seat backrest Leatherette Pin stripe velour Discontinued part	right	1	
	08/77-07/82AE8	Cork/cork			
	08/77-07/82AE9	Black/cork			
	08/77-07/82AG1	Dark green/cork			
	08/77-07/82AG2	Black/lobster			
	08/77-07/82AG3	black/black			
(13)	928 522 005 50	Back seat backrest Leather	left	1	
	08/77-07/8240D	Cork			
	08/77-07/8220B	Dark green			

Model	Year	MG	SG	Illustration	Restrictions	UPD	7:26	27.10.2023
928	1978	8	08	808-045		738		

Pos	Part Number	Description	Remark	Qty	Model
	08/77-07/823NG	brown			
	08/77-07/821AJ	Black			
	08/77-07/8230B	blue			
	08/77-07/8250B	beige			
	08/77-07/8280S	Can-can-red			
	08/77-07/8295S	Papyrus			
	08/77-07/8260S	Hannibal grey			
	08/77-07/8220S	Leather			
13	928 522 006 50	Back seat backrest Leather	right	1	
	08/77-07/8240D	Cork			
	08/77-07/8220B	Dark green			
	08/77-07/823NG	brown			
	08/77-07/821AJ	Black			
	08/77-07/8230B	blue			
	08/77-07/8250B	beige			
	08/77-07/8280S	Can-can-red			
	08/77-07/8295S	Papyrus			
	08/77-07/8260S	Hannibal grey			
	08/77-07/8220S	Leather			
(13)	928 522 005 51	Back seat backrest Leather Checker board velour	left	1	
	08/77-07/82AH1	Dark green beige/black			
	08/77-07/82AH2	brown brown/black			
	08/77-07/82AH3	Black beige/black			
	08/77-07/82AH4	Black Blue/black			
	08/77-07/82AH5	Cork beige/black			
	08/77-07/82AH6	Black black/white			

Model	Year	MG	SG	Illustration	Restrictions	UPD	7:26	27.10.2023
928	1978	8	08	808-045		738		

Pos	Part Number	Description	Remark	Qty	Model
	08/77-07/82AH7	Cork brown/black			
	08/77-07/82AQ1	brown brown/black			
	08/77-07/82AQ2	Black brown/black			
	08/77-07/82AQ3	Black Blue/black			
	08/77-07/82AJ1	Blue/black Blue/black			
	08/77-07/82AJ2	Grey/black Grey/black			
	08/77-07/82AJ3	Beige/brown Beige/brown			
	08/77-07/82AJ4	Beige/brown Beige/brown			
	08/77-07/82AQ8	beige brown/black			
13	928 522 006 51	Back seat backrest Leather Checker board velour	right	1	
	08/77-07/82AH1	Dark green beige/black			
	08/77-07/82AH2	brown brown/black			
	08/77-07/82AH3	Black beige/black			
	08/77-07/82AH4	Black Blue/black			
	08/77-07/82AH5	Cork beige/black			
	08/77-07/82AH6	Black black/white			
	08/77-07/82AH7	Cork brown/black			
	08/77-07/82AQ1	brown brown/black			
	08/77-07/82AQ2	Black brown/black			
	08/77-07/82AQ3	Black Blue/black			

Model	Year	MG	SG	Illustration	Restrictions	UPD	7:26	27.10.2023
928	1978	8	08	808-045		738		

Pos	Part Number	Description	Remark	Qty	Model
	08/77-07/82AJ1	Blue/black Blue/black			
	08/77-07/82AJ2	Grey/black Grey/black			
	08/77-07/82AJ3	Beige/brown Beige/brown			
	08/77-07/82AJ4	Beige/brown Beige/brown			
	08/77-07/82AQ8	beige brown/black			
(13)	928 522 005 51	Back seat backrest Leather Fabric	left	1	
	08/77-07/82AK1	Blue/blue			
	08/77-07/82AR2	brown			
	08/77-07/82AK3	Beige/Beige			
	08/77-07/82AK4	Back seat backrest			
	08/77-07/82AK5	Back seat backrest			
13	928 522 006 51	Back seat backrest Leather Fabric	right	1	
	08/77-07/82AK1	Blue/blue			
	08/77-07/82AR2	brown			
	08/77-07/82AK3	Beige/Beige			
	08/77-07/82AK4	Back seat backrest			
	08/77-07/82AK5	Back seat backrest			
(13)	928 522 005 51	Back seat backrest Leather Tartan cloth	left	1	
	08/77-07/82AS1	blue Red-blue			
	08/77-07/82AS2	Black Red-blue			
	08/77-07/82AS3	blue Green-blue			
	08/77-07/82AS4	Black Green-blue			
	08/77-07/82AS5	Black Brown-beige			

Model	Year	MG	SG	Illustration	Restrictions	UPD	7:26	27.10.2023
928	1978	8	08	808-045		738		

Pos	Part Number	Description	Remark	Qty	Model
	08/77-07/82AS6	brown Brown-beige			
	08/77-07/82AS7	beige Brown-beige			
13	928 522 006 51	Back seat backrest Leather Tartan cloth	right	1	
	08/77-07/82AS1	blue Red-blue			
	08/77-07/82AS2	Black Red-blue			
	08/77-07/82AS3	blue Green-blue			
	08/77-07/82AS4	Black Green-blue			
	08/77-07/82AS5	Black Brown-beige			
	08/77-07/82AS6	brown Brown-beige			
	08/77-07/82AS7	beige Brown-beige			
(13)	928 522 005 51	Back seat backrest Leather Berber fabric	left	1	
	08/77-07/82AK6	Back seat backrest Grey/black			
	08/77-07/82AK7	Back seat backrest Blue/black			
	08/77-07/82AK8	Back seat backrest Beige/brown			
	08/77-07/82AK9	Back seat backrest Beige/brown			
13	928 522 006 51	Back seat backrest Leather Berber fabric	right	1	
	08/77-07/82AK6	Back seat backrest Grey/black			
	08/77-07/82AK7	Back seat backrest Blue/black			
	08/77-07/82AK8	Back seat backrest Beige/brown			

Model	Year	MG	SG	Illustration	Restrictions	UPD	7:26	27.10.2023
928	1978	8	08	808-045		738		

Pos	Part Number	Description	Remark	Qty	Model
	08/77-07/82AK9	Back seat backrest Beige/brown			
14	113 881 633 E	Actuator button D >> - MJ 1979		2	
	08/77-07/7901C	Satin black	rightangled 77-83		
(14)	911 521 817 00	Actuator button D - MJ 1980>>		2	
	08/79-07/8201C	Satin black			
15	311 881 247	Clip		2	
16	311 881 607 A	Trim D >> - MJ 1979		2	
(16)	911 521 815 00	Rosette D - MJ 1980>>		2	
	08/79-07/8201C	Satin black			
17	928 522 619 02	Rosette		2	
18	928 522 415 03	Rosette		2	
	08/77-07/8270B	Black			
19	928 522 635 02	Bearing bush		2	
(20)	928 522 059 03	Rear seat cushion Checker board velour Discontinued part	left front	1	
	08/77-07/8257A	beige/black			
	08/77-07/8247A	brown/black			
	08/77-07/8237A	Blue/black			
	08/77-07/8279A	black/white			
	08/77-07/821BV	Grey/black			
	08/77-07/824NV	Beige/brown			
(20)	928 522 059 04	Seat cushion Checker board velour	left front	1	
	08/77-07/8257A	beige/black			
	08/77-07/8247A	brown/black			
	08/77-07/8237A	Blue/black			
	08/77-07/8279A	black/white			

Model	Year	MG	SG	Illustration	Restrictions	UPD	7:26	27.10.2023
928	1978	8	08	808-045		738		

Pos	Part Number	Description	Remark	Qty	Model
	08/77-07/821BV	Grey/black			
	08/77-07/824NV	Beige/brown			
20	928 522 060 03	Rear seat cushion Checker board velour Discontinued part	right front	1	
	08/77-07/8257A	beige/black			
	08/77-07/8247A	brown/black			
	08/77-07/8237A	Blue/black			
	08/77-07/8279A	black/white			
	08/77-07/821BV	Grey/black			
	08/77-07/824NV	Beige/brown			
20	928 522 060 04	Rear seat cushion Checker board velour	right front	1	
	08/77-07/8257A	beige/black			
	08/77-07/8247A	brown/black			
	08/77-07/8237A	Blue/black			
	08/77-07/8279A	black/white			
	08/77-07/821BV	Grey/black			
	08/77-07/824NV	Beige/brown			
(20)	928 522 059 03	Rear seat cushion Pin stripe velour Discontinued part	left	1	
	08/77-07/8240D	Cork			
	08/77-07/8280D	Lobster			
	08/77-07/8270D	Black			
(20)	928 522 059 04	Seat cushion Pin stripe velour	left	1	
	08/77-07/8240D	Cork			
	08/77-07/8280D	Lobster			
	08/77-07/8270D	black/white			
20	928 522 060 03	Rear seat cushion Pin stripe velour Discontinued part	right	1	
	08/77-07/8240D	Cork			

Model	Year	MG	SG	Illustration	Restrictions	UPD	7:26	27.10.2023
928	1978	8	08	808-045		738		

Pos	Part Number	Description	Remark	Qty	Model
	08/77-07/8280D	Lobster			
	08/77-07/8270D	Black			
20	928 522 060 04	Rear seat cushion Pin stripe velour	right	1	
	08/77-07/8240D	Cork			
	08/77-07/8280D	Lobster			
	08/77-07/8270D	Black			
(20)	928 522 059 03	Rear seat cushion Fabric Discontinued part	left	1	
	08/77-07/8230C	blue			
	08/77-07/8240C	brown			
	08/77-07/8250C	beige			
	08/77-07/8270F	Black			
(20)	928 522 059 04	Seat cushion Fabric	left	1	
	08/77-07/8230C	blue			
	08/77-07/8240C	brown			
	08/77-07/8250C	beige			
	08/77-07/8270F	Black			
20	928 522 060 03	Rear seat cushion Fabric Discontinued part	right	1	
	08/77-07/8230C	blue			
	08/77-07/8240C	brown			
	08/77-07/8250C	beige			
	08/77-07/8270F	Black			
20	928 522 060 04	Rear seat cushion Fabric	right	1	
	08/77-07/8230C	blue			
	08/77-07/8240C	brown			
	08/77-07/8250C	beige			
	08/77-07/8270F	Black			

Model	Year	MG	SG	Illustration	Restrictions	UPD	7:26	27.10.2023
928	1978	8	08	808-045		738		

Pos	Part Number	Description	Remark	Qty	Model
(20)	928 522 059 03	Rear seat cushion Tartan cloth Discontinued part	left	1	
	08/77-07/8283S	Red-blue			
	08/77-07/8223A	Rear seat cushion			
	08/77-07/8245A	Rear seat cushion			
(20)	928 522 059 04	Seat cushion Tartan cloth	left	1	
	08/77-07/8283S	Red-blue			
	08/77-07/8223A	Seat cushion			
	08/77-07/8245A	Seat cushion			
20	928 522 060 03	Rear seat cushion Tartan cloth Discontinued part	right	1	
	08/77-07/8283S	Red-blue			
	08/77-07/8223A	Rear seat cushion			
	08/77-07/8245A	Rear seat cushion			
20	928 522 060 04	Rear seat cushion Tartan cloth	right	1	
	08/77-07/8283S	Red-blue			
	08/77-07/8223A	Rear seat cushion			
	08/77-07/8245A	Rear seat cushion			
(20)	928 522 059 03	Rear seat cushion Berber fabric Discontinued part	left	1	
	08/77-07/8237B	Blue/black			
	08/77-07/828NB	Beige/brown			
	08/77-07/821GB	Grey/black			
(20)	928 522 059 04	Seat cushion Berber fabric	left	1	
	08/77-07/8237B	Blue/black			
	08/77-07/828NB	Beige/brown			
	08/77-07/821GB	Grey/black			
20	928 522 060 03	Rear seat cushion Berber fabric Discontinued part	right	1	

Model	Year	MG	SG	Illustration	Restrictions	UPD	7:26	27.10.2023
928	1978	8	08	808-045		738		

Pos	Part Number	Description	Remark	Qty	Model
	08/77-07/8237B	Blue/black			
	08/77-07/828NB	Beige/brown			
	08/77-07/821GB	Grey/black			
20	928 522 060 04	Rear seat cushion Berber fabric	right	1	
	08/77-07/8237B	Blue/black			
	08/77-07/828NB	Beige/brown			
	08/77-07/821GB	Grey/black			
(20)	928 522 059 03	Rear seat cushion Design: Discontinued part	left Striped	1	PR:406
	08/77-07/829LA	Burgundy-grey			
(20)	928 522 059 04	Seat cushion Design:	left Striped	1	PR:406
	08/77-07/829LA	Burgundy-grey			
20	928 522 060 03	Rear seat cushion Design: Discontinued part	right Striped	1	PR:406
	08/77-07/829LA	Burgundy-grey			
20	928 522 060 04	Rear seat cushion Design:	right Striped	1	PR:406
	08/77-07/829LA	Burgundy-grey			
(20)	928 522 059 50	Rear seat cushion Leather Discontinued part	left front	1	
	08/77-07/8240D	Cork			
	08/77-07/8220B	Dark green			
	08/77-07/823NG	brown			
	08/77-07/821AJ	Black			
	08/77-07/8230B	blue			
	08/77-07/8250B	beige			
	08/77-07/8280S	Can-can red/black			
	08/77-07/8295S	Papyrus			
	08/77-07/8260S	Hannibal grey			
	08/77-07/8220S	Mint green			

Model	Year	MG	SG	Illustration	Restrictions	UPD	7:26	27.10.2023
928	1978	8	08	808-045		738		

Pos	Part Number	Description	Remark	Qty	Model
(20)	928 522 059 51	Seat cushion	left front	1	
		Leather			
	08/77-07/8240D	Cork			
	08/77-07/8220B	Dark green			
	08/77-07/823NG	brown			
	08/77-07/821AJ	Black			
	08/77-07/8230B	blue			
	08/77-07/8250B	beige			
	08/77-07/8280S	Leather			
	08/77-07/8295S	Leather			
	08/77-07/8260S	Leather			
	08/77-07/8220S	Leather			
20	928 522 060 50	Seat cushion	right front	1	
		Leather Discontinued part			
	08/77-07/8240D	Cork			
	08/77-07/8220B	Dark green			
	08/77-07/823NG	brown			
	08/77-07/821AJ	Black			
	08/77-07/8230B	blue			
	08/77-07/8250B	beige			
	08/77-07/8280S	Can-can red/black			
	08/77-07/8295S	Papyrus			
	08/77-07/8260S	Hannibal grey			
	08/77-07/8220S	Mint green			
20	928 522 060 51	Rear seat cushion	right front	1	
		Leather			
	08/77-07/8240D	Cork			
	08/77-07/8220B	Dark green			
	08/77-07/823NG	brown			
	08/77-07/821AJ	Black			

Model	Year	MG	SG	Illustration	Restrictions	UPD	7:26	27.10.2023
928	1978	8	08	808-045		738		

Pos	Part Number	Description	Remark	Qty	Model
	08/77-07/8230B	blue			
	08/77-07/8250B	beige			
	08/77-07/8280S	Can-can red/black			
	08/77-07/8295S	Papyrus			
	08/77-07/8260S	Hannibal grey			
	08/77-07/8220S	Mint green			
(21)	928 522 087 03	Rear seat cushion	left center	1	
		Checker board velour Discontinued part			
	08/77-07/8257A	beige/black			
	08/77-07/8247A	brown/black			
	08/77-07/8237A	Blue/black			
	08/77-07/8279A	black/white			
	08/77-07/821BV	Grey/black			
	08/77-07/824NV	Beige/brown			
(21)	928 522 087 04	Seat cushion	left center	1	
		Checker board velour			
	08/77-07/8257A	beige/black			
	08/77-07/8247A	brown/black			
	08/77-07/8237A	Blue/black			
	08/77-07/8279A	black/white			
	08/77-07/821BV	Grey/black			
	08/77-07/824NV	Beige/brown			
21	928 522 088 03	Rear seat cushion	right center	1	
		Checker board velour Discontinued part			
	08/77-07/8257A	beige/black			
	08/77-07/8247A	brown/black			
	08/77-07/8237A	Blue/black			
	08/77-07/8279A	black/white			
	08/77-07/821BV	Grey/black			
	08/77-07/824NV	Beige/brown			

Model	Year	MG	SG	Illustration	Restrictions	UPD	7:26	27.10.2023
928	1978	8	08	808-045		738		

Pos	Part Number	Description	Remark	Qty	Model
21	928 522 088 04	Seat cushion Checker board velour	right center	1	
	08/77-07/8257A	beige/black			
	08/77-07/8247A	brown/black			
	08/77-07/8237A	Blue/black			
	08/77-07/8279A	black/white			
	08/77-07/821BV	Grey/black			
	08/77-07/824NV	Beige/brown			
(21)	928 522 087 03	Rear seat cushion Pin stripe velour Discontinued part	left	1	
	08/77-07/8240D	Cork			
	08/77-07/8280D	Lobster			
	08/77-07/8270D	Black			
(21)	928 522 087 04	Seat cushion Pin stripe velour	left	1	
	08/77-07/8240D	Cork			
	08/77-07/8280D	Lobster			
	08/77-07/8270D	Black			
21	928 522 088 03	Rear seat cushion Pin stripe velour Discontinued part	right	1	
	08/77-07/8240D	Cork			
	08/77-07/8280D	Lobster			
	08/77-07/8270D	Black			
21	928 522 088 04	Seat cushion Pin stripe velour	right	1	
	08/77-07/8240D	Cork			
	08/77-07/8280D	Lobster			
	08/77-07/8270D	Black			
(21)	928 522 087 03	Rear seat cushion Fabric Discontinued part	left	1	
	08/77-07/8230C	blue			
	08/77-07/8240C	brown			

Model	Year	MG	SG	Illustration	Restrictions	UPD	7:26	27.10.2023
928	1978	8	08	808-045		738		

Pos	Part Number	Description	Remark	Qty	Model
	08/77-07/8250C	beige			
	08/77-07/8270F	Black			
(21)	928 522 087 04	Seat cushion Fabric	left	1	
	08/77-07/8230C	blue			
	08/77-07/8240C	brown			
	08/77-07/8250C	beige			
	08/77-07/8270F	Black			
21	928 522 088 03	Rear seat cushion Fabric Discontinued part	right	1	
	08/77-07/8230C	blue			
	08/77-07/8240C	brown			
	08/77-07/8250C	beige			
	08/77-07/8270F	Black			
21	928 522 088 04	Seat cushion Fabric	right	1	
	08/77-07/8230C	blue			
	08/77-07/8240C	brown			
	08/77-07/8250C	beige			
	08/77-07/8270F	Black			
(21)	928 522 087 03	Rear seat cushion Tartan cloth Discontinued part	left	1	
	08/77-07/8283S	Red-blue			
	08/77-07/8223A	Rear seat cushion			
	08/77-07/8245A	Rear seat cushion			
(21)	928 522 087 04	Seat cushion Tartan cloth	left	1	
	08/77-07/8283S	Red-blue			
	08/77-07/8223A	Seat cushion			
	08/77-07/8245A	Seat cushion			
21	928 522 088 03	Rear seat cushion Tartan cloth Discontinued part	right	1	

Model	Year	MG	SG	Illustration	Restrictions	UPD	7:26	27.10.2023
928	1978	8	08	808-045		738		

Pos	Part Number	Description	Remark	Qty	Model
	08/77-07/8283S	Red-blue			
	08/77-07/8223A	Rear seat cushion			
	08/77-07/8245A	Rear seat cushion			
21	928 522 088 04	Seat cushion Tartan cloth	right	1	
	08/77-07/8283S	Red-blue			
	08/77-07/8223A	Seat cushion			
	08/77-07/8245A	Seat cushion			
(21)	928 522 087 03	Rear seat cushion Berber fabric Discontinued part	left	1	
	08/77-07/8237B	Blue/black			
	08/77-07/828NB	Beige/brown			
	08/77-07/821GB	Grey/black			
(21)	928 522 087 04	Seat cushion Berber fabric	left	1	
	08/77-07/8237B	Blue/black			
	08/77-07/828NB	Beige/brown			
	08/77-07/821GB	Grey/black			
21	928 522 088 03	Rear seat cushion Berber fabric Discontinued part	right	1	
	08/77-07/8237B	Blue/black			
	08/77-07/828NB	Beige/brown			
	08/77-07/821GB	Grey/black			
21	928 522 088 04	Seat cushion Berber fabric	right	1	
	08/77-07/8237B	Blue/black			
	08/77-07/828NB	Beige/brown			
	08/77-07/821GB	Grey/black			
(21)	928 522 087 03	Rear seat cushion Design: Discontinued part	left Striped	1	PR:406
	08/77-07/829LA	Burgundy-grey			
(21)	928 522 087 04	Seat cushion Design:	left Striped	1	PR:406

Model	Year	MG	SG	Illustration	Restrictions	UPD	7:26	27.10.2023
928	1978	8	08	808-045		738		

Pos	Part Number	Description	Remark	Qty	Model
	08/77-07/829LA	Burgundy-grey			
21	928 522 088 03	Rear seat cushion Design: Discontinued part	right Striped	1	PR:406
	08/77-07/829LA	Burgundy-grey			
21	928 522 088 04	Seat cushion Design:	right Striped	1	PR:406
	08/77-07/829LA	Burgundy-grey			
(21)	928 522 087 50	Rear seat cushion Leather Discontinued part	left center	1	
	08/77-07/8240D	Cork			
	08/77-07/8220B	Dark green			
	08/77-07/823NG	brown			
	08/77-07/821AJ	Black			
	08/77-07/8230B	blue			
	08/77-07/8250B	beige			
	08/77-07/8280S	Can-can red/black			
	08/77-07/8295S	Papyrus			
	08/77-07/8260S	Hannibal grey			
	08/77-07/8220S	Mint green			
(21)	928 522 087 51	Seat cushion Leather	left center	1	
	08/77-07/8240D	Cork			
	08/77-07/8220B	Dark green			
	08/77-07/823NG	brown			
	08/77-07/821AJ	Black			
	08/77-07/8230B	Leather			
	08/77-07/8250B	beige			
	08/77-07/8280S	Can-can-red			
	08/77-07/8295S	Papyrus			
	08/77-07/8260S	Hannibal grey			
	08/77-07/8220S	Leather			

Model	Year	MG	SG	Illustration	Restrictions	UPD	7:26	27.10.2023
928	1978	8	08	808-045		738		

Pos	Part Number	Description	Remark	Qty	Model
21	928 522 088 50	Rear seat cushion	right center	1	
		Leather Discontinued part			
	08/77-07/8240D	Cork			
	08/77-07/8220B	Dark green			
	08/77-07/823NG	brown			
	08/77-07/821AJ	Black			
	08/77-07/8230B	blue			
	08/77-07/8250B	beige			
	08/77-07/8280S	Can-can red/black			
	08/77-07/8295S	Papyrus			
	08/77-07/8260S	Hannibal grey			
	08/77-07/8220S	Mint green			
21	928 522 088 51	Seat cushion	right center	1	
		Leather			
	08/77-07/8240D	Leather			
	08/77-07/8220B	Dark green			
	08/77-07/823NG	Leather			
	08/77-07/821AJ	Leather			
	08/77-07/8230B	Leather			
	08/77-07/8250B	Leather			
	08/77-07/8280S	Leather			
	08/77-07/8295S	Leather			
	08/77-07/8260S	Leather			
	08/77-07/8220S	Leather			
(22)	928 522 045 03	Seat cushion	left upper	1	
		Checker board velour			
	08/77-07/8257A	beige/black			
	08/77-07/8247A	brown/black			
	08/77-07/8237A	Blue/black			
	08/77-07/8279A	black/white			

Model	Year	MG	SG	Illustration	Restrictions	UPD	7:26	27.10.2023
928	1978	8	08	808-045		738		

Pos	Part Number	Description	Remark	Qty	Model
	08/77-07/821BV	Grey/black			
	08/77-07/824NV	Beige/brown			
22	928 522 046 03	Seat cushion Checker board velour	right upper	1	
	08/77-07/8257A	beige/black			
	08/77-07/8247A	brown/black			
	08/77-07/8237A	Blue/black			
	08/77-07/8279A	black/white			
	08/77-07/821BV	Grey/black			
	08/77-07/824NV	Beige/brown			
(22)	928 522 045 03	Seat cushion Pin stripe velour	left	1	
	08/77-07/8240D	Cork			
	08/77-07/8280D	Lobster			
	08/77-07/8270D	black/white			
22	928 522 046 03	Seat cushion Pin stripe velour	right	1	
	08/77-07/8240D	Cork			
	08/77-07/8280D	Lobster			
	08/77-07/8270D	black/white			
(22)	928 522 045 03	Seat cushion Fabric	left	1	
	08/77-07/8230C	blue			
	08/77-07/8240C	brown			
	08/77-07/8250C	beige			
	08/77-07/8270F	Black			
22	928 522 046 03	Seat cushion Fabric	right	1	
	08/77-07/8230C	blue			
	08/77-07/8240C	brown			
	08/77-07/8250C	beige			
	08/77-07/8270F	Black			

Model	Year	MG	SG	Illustration	Restrictions	UPD	7:26	27.10.2023
928	1978	8	08	808-045		738		

Pos	Part Number	Description	Remark	Qty	Model
(22)	928 522 045 03	Seat cushion Tartan cloth	left	1	
	08/77-07/8283S	Red-blue			
	08/77-07/8223A	Seat cushion			
	08/77-07/8245A	Seat cushion			
22	928 522 046 03	Seat cushion Tartan cloth	right	1	
	08/77-07/8283S	Red-blue			
	08/77-07/8223A	Seat cushion			
	08/77-07/8245A	Seat cushion			
(22)	928 522 045 03	Seat cushion Berber fabric	left	1	
	08/77-07/8237B	Blue/black			
	08/77-07/828NB	Beige/brown			
	08/77-07/821GB	Grey/black			
22	928 522 046 03	Seat cushion Berber fabric	right	1	
	08/77-07/8237B	Blue/black			
	08/77-07/828NB	Beige/brown			
	08/77-07/821GB	Grey/black			
(22)	928 522 045 03	Seat cushion Design:	left Striped	1	PR:406
	08/77-07/829LA	Burgundy-grey			
22	928 522 046 03	Seat cushion Design:	right Striped	1	PR:406
	08/77-07/829LA	Burgundy-grey			
(22)	928 522 045 50	Seat cushion Leather	left upper	1	
	08/77-07/8240D	Cork			
	08/77-07/8220B	Dark green			
	08/77-07/823NG	brown			
	08/77-07/821AJ	Black			
	08/77-07/8230B	blue			
	08/77-07/8250B	beige			

Model	Year	MG	SG	Illustration	Restrictions	UPD	7:26	27.10.2023
928	1978	8	08	808-045		738		

Pos	Part Number	Description	Remark	Qty	Model
	08/77-07/8280S	Can-can-red			
	08/77-07/8295S	Papyrus			
	08/77-07/8260S	Hannibal grey			
	08/77-07/8220S	Leather			
22	928 522 046 50	Seat cushion	right upper	1	
		Leather			
	08/77-07/8240D	Cork			
	08/77-07/8220B	Dark green			
	08/77-07/823NG	brown			
	08/77-07/821AJ	Black			
	08/77-07/8230B	blue			
	08/77-07/8250B	beige			
	08/77-07/8280S	Can-can-red			
	08/77-07/8295S	Papyrus			
	08/77-07/8260S	Hannibal grey			
	08/77-07/8220S	Leather			
(23)	928 522 041 03	seat well	left outer	1	
		Leatherette D >> - MJ 1978			
	08/77-07/7840D	Cork			
	08/77-07/7820B	Dark green			
	08/77-07/7821S	brown			
	08/77-07/7805T	Black			
	08/77-07/7830B	blue			
	08/77-07/7850B	beige			
23	928 522 042 03	seat well	right outer	1	
		Leatherette D >> - MJ 1978			
	08/77-07/7840D	Cork			
	08/77-07/7820B	Dark green			
	08/77-07/7821S	brown			
	08/77-07/7805T	Black			

Model	Year	MG	SG	Illustration	Restrictions	UPD	7:26	27.10.2023
928	1978	8	08	808-045		738		

Pos	Part Number	Description	Remark	Qty	Model
	08/77-07/7830B	blue			
	08/77-07/7850B	beige			
(23)	928 522 041 04	seat well	left outer	1	
		Leatherette D - MJ 1979>>			
	08/78-07/8240D	Cork			
	08/78-07/8220B	Dark green			
	08/78-07/8221S	brown			
	08/78-07/8205T	Black			
	08/78-07/8230B	blue			
	08/78-07/8250B	beige			
23	928 522 042 04	seat well	right outer	1	
		Leatherette D - MJ 1979>>			
	08/78-07/8240D	Cork			
	08/78-07/8220B	Dark green			
	08/78-07/8221S	brown			
	08/78-07/8205T	Black			
	08/78-07/8230B	blue			
	08/78-07/8250B	beige			
(23)	928 522 041 51	seat well	left outer	1	
		Leather			
	08/77-07/8240D	Cork			
	08/77-07/8220B	Dark green			
	08/77-07/823NG	brown			
	08/77-07/821AJ	Black			
	08/77-07/8230B	blue			
	08/77-07/8250B	beige			
	08/77-07/8280S	Can-can-red			
	08/77-07/8295S	Papyrus			
	08/77-07/8260S	Hannibal grey			
	08/77-07/8220S	Leather			

Model	Year	MG	SG	Illustration	Restrictions	UPD	7:26	27.10.2023
928	1978	8	08	808-045		738		

Pos	Part Number	Description	Remark	Qty	Model
	08/77-07/822LB	wine red			
23	928 522 042 51	seat well Leather	right outer	1	
	08/77-07/8240D	Cork			
	08/77-07/8220B	Dark green			
	08/77-07/823NG	brown			
	08/77-07/821AJ	Black			
	08/77-07/8230B	blue			
	08/77-07/8250B	beige			
	08/77-07/8280S	Can-can-red			
	08/77-07/8295S	Papyrus			
	08/77-07/8260S	Hannibal grey			
	08/77-07/8220S	Leather			
	08/77-07/822LB	wine red			
(23)	928 522 041 52	seat well Leather D - MJ 1979>>	left outer	1	
	08/78-07/8240D	Cork			
	08/78-07/8220B	Dark green			
	08/78-07/823NG	brown			
	08/78-07/821AJ	Black			
	08/78-07/8230B	blue			
	08/78-07/8250B	beige			
	08/78-07/8280S	Can-can-red			
	08/78-07/8295S	Papyrus			
	08/78-07/8260S	Hannibal grey			
	08/78-07/8220S	Leather			
	08/81-07/822LB	wine red D - MJ 1982>> - MJ 1982			
23	928 522 042 52	seat well Leather D - MJ 1979>>	right outer	1	
	08/78-07/8240D	Cork			

Model	Year	MG	SG	Illustration	Restrictions	UPD	7:26	27.10.2023
928	1978	8	08	808-045		738		

Pos	Part Number	Description	Remark	Qty	Model
	08/78-07/8220B	Dark green			
	08/78-07/823NG	brown			
	08/78-07/821AJ	Black			
	08/78-07/8230B	blue			
	08/78-07/8250B	beige			
	08/78-07/8280S	Can-can-red			
	08/78-07/8295S	Papyrus			
	08/78-07/8260S	Hannibal grey			
	08/78-07/8220S	Leather			
	08/81-07/822LB	wine red D - MJ 1982>> - MJ 1982			
24	928 522 061 02	Cover for stowage compartment Stowage box Leatherette D >> - MJ 1979		1	
	08/77-07/7940D	Cork			
	08/77-07/7920B	Dark green			
	08/77-07/7921S	brown			
	08/77-07/7905T	Black			
24	928 522 061 50	Cover Stowage box Leather		1	
	08/77-07/8240D	Cork			
	08/77-07/8220B	Dark green			
	08/77-07/823NG	brown			
	08/77-07/821AJ	Black			
	08/77-07/8230B	blue			
	08/77-07/8250B	beige			
	08/77-07/8280S	Can-can-red			
	08/77-07/8295S	Papyrus			
	08/77-07/8260S	Hannibal grey			
	08/77-07/8220S	Leather			
	08/77-07/822LB	wine red			

Model	Year	MG	SG	Illustration	Restrictions	UPD	7:26	27.10.2023
928	1978	8	08	808-045		738		

Pos	Part Number	Description	Remark	Qty	Model
24A	900 309 010 00	spring pin 3 X 32		2	
25	928 555 469 02	knob Luggage net D >> - MJ 1979		4	
26	900 145 053 07	panel screw B 4,8 X 22 D >> - MJ 1979		4	
27	999 591 602 12	panel screw ST 4,2 X 16 D >> - MJ 1979	chromed	4	
28	928 555 471 02	Luggage net Backrest D >> - MJ 1979		1	
29	928 522 251 02	Foam part	left upper	1	
(29)	928 522 252 02	Foam part	right upper	1	
30	928 522 253 02	Foam part	left lower	1	
(30)	928 522 254 02	Foam part	right lower	1	
31	928 522 037 03	Backrest cover Leatherette Checker board velour Discontinued part	left	1	
	08/77-07/82AE1	Dark green beige/black			
	08/77-07/82AE2	brown brown/black			
	08/77-07/82AE3	Black beige/black			
	08/77-07/82AE4	Black brown/black			
	08/77-07/82AE5	Black Blue/black			
	08/77-07/82AE6	Cork Beige/brown			
	08/77-07/82AE7	Black black/white			
	08/77-07/82AG4	Cork brown/black			

Model	Year	MG	SG	Illustration	Restrictions	UPD	7:26	27.10.2023
928	1978	8	08	808-045		738		

Pos	Part Number	Description	Remark	Qty	Model
(31)	928 522 038 03	Backrest cover Leatherette Checker board velour Discontinued part	right	1	
	08/77-07/82AE1	Dark green beige/black			
	08/77-07/82AE2	brown brown/black			
	08/77-07/82AE3	Black beige/black			
	08/77-07/82AE4	Black brown/black			
	08/77-07/82AE5	Black Blue/black			
	08/77-07/82AE6	Cork Beige/brown			
	08/77-07/82AE7	Black black/white			
	08/77-07/82AG4	Cork brown/black			
31	928 522 037 03	Backrest cover Leatherette Pin stripe velour Discontinued part	left	1	
	08/77-07/82AE8	Cork/cork			
	08/77-07/82AE9	Black/cork			
	08/77-07/82AG1	Dark green/cork			
	08/77-07/82AG2	Black/lobster			
	08/77-07/82AG3	black/black			
(31)	928 522 038 03	Backrest cover Leatherette Pin stripe velour Discontinued part	right	1	
	08/77-07/82AE8	Cork/cork			
	08/77-07/82AE9	Black/cork			
	08/77-07/82AG1	Dark green/cork			
	08/77-07/82AG2	Black/lobster			
	08/77-07/82AG3	black/black			
(31)	928 522 037 50	Backrest cover Leather	left	1	

Model	Year	MG	SG	Illustration	Restrictions	UPD	7:26	27.10.2023
928	1978	8	08	808-045		738		

Pos	Part Number	Description	Remark	Qty	Model
	08/77-07/8240D	Cork			
	08/77-07/8220B	Dark green			
	08/77-07/823NG	brown			
	08/77-07/821AJ	Black			
	08/77-07/8230B	blue			
	08/77-07/8250B	beige			
	08/77-07/8280S	Can-can-red			
	08/77-07/8295S	Papyrus			
	08/77-07/8260S	Hannibal grey			
	08/77-07/8220S	Leather			
(31)	928 522 038 50	Backrest cover Leather	right	1	
	08/77-07/8240D	Cork			
	08/77-07/8220B	Dark green			
	08/77-07/823NG	brown			
	08/77-07/821AJ	Black			
	08/77-07/8230B	blue			
	08/77-07/8250B	beige			
	08/77-07/8280S	Can-can-red			
	08/77-07/8295S	Papyrus			
	08/77-07/8260S	Hannibal grey			
	08/77-07/8220S	Leather			
(31)	928 522 037 51	Backrest cover Leather Checker board velour	left	1	
	08/77-07/82AH1	Dark green beige/black			
	08/77-07/82AH2	brown brown/black			
	08/77-07/82AH3	Black beige/black			
	08/77-07/82AH4	Black Blue/black			
	08/77-07/82AH5	Cork beige/black			

Model	Year	MG	SG	Illustration	Restrictions	UPD	7:26	27.10.2023
928	1978	8	08	808-045		738		

Pos	Part Number	Description	Remark	Qty	Model
	08/77-07/82AH6	Black black/white			
	08/77-07/82AH7	Cork brown/black			
	08/77-07/82AQ1	brown brown/black			
	08/77-07/82AQ2	Black brown/black			
	08/77-07/82AQ3	Black Blue/black			
	08/77-07/82AJ1	Blue/black Blue/black			
	08/77-07/82AJ2	Grey/black Grey/black			
	08/77-07/82AJ3	Beige/brown Beige/brown			
	08/77-07/82AJ4	Beige/brown Beige/brown			
	08/77-07/82AQ8	beige brown/black			
(31)	928 522 038 51	Backrest cover Leather Checker board velour	right	1	
	08/77-07/82AH1	Dark green beige/black			
	08/77-07/82AH2	brown brown/black			
	08/77-07/82AH3	Black beige/black			
	08/77-07/82AH4	Black Blue/black			
	08/77-07/82AH5	Cork beige/black			
	08/77-07/82AH6	Black black/white			
	08/77-07/82AH7	Cork brown/black			
	08/77-07/82AQ1	brown brown/black			
	08/77-07/82AQ2	Black brown/black			

Model	Year	MG	SG	Illustration	Restrictions	UPD	7:26	27.10.2023
928	1978	8	08	808-045		738		

Pos	Part Number	Description	Remark	Qty	Model
	08/77-07/82AQ3	Black Blue/black			
	08/77-07/82AJ1	Blue/black Blue/black			
	08/77-07/82AJ2	Grey/black Grey/black			
	08/77-07/82AJ3	Beige/brown Beige/brown			
	08/77-07/82AJ4	Beige/brown Beige/brown			
	08/77-07/82AQ8	beige brown/black			
(31)	928 522 037 51	Backrest cover Leather Fabric	left	1	
	08/77-07/82AK1	Blue/blue			
	08/77-07/82AR2	brown			
	08/77-07/82AK3	Beige/Beige			
	08/77-07/82AK4	Backrest cover (leatherette)			
	08/77-07/82AK5	Brown-beige			
(31)	928 522 038 51	Backrest cover Leather Fabric	right	1	
	08/77-07/82AK1	Blue/blue			
	08/77-07/82AR2	brown			
	08/77-07/82AK3	Beige/Beige			
	08/77-07/82AK4	Black			
	08/77-07/82AK5	Brown-beige			
(31)	928 522 037 51	Backrest cover Leather Tartan cloth	left	1	
	08/77-07/82AS1	blue Red-blue			
	08/77-07/82AS2	Black Red-blue			
	08/77-07/82AS3	blue Green-blue			
	08/77-07/82AS4	Black Green-blue			

Model	Year	MG	SG	Illustration	Restrictions	UPD	7:26	27.10.2023
928	1978	8	08	808-045		738		

Pos	Part Number	Description	Remark	Qty	Model
	08/77-07/82AS5	Black Brown-beige			
	08/77-07/82AS6	brown Brown-beige			
	08/77-07/82AS7	beige Brown-beige			
(31)	928 522 038 51	Backrest cover Leather Tartan cloth	right	1	
	08/77-07/82AS1	blue Red-blue			
	08/77-07/82AS2	Black Red-blue			
	08/77-07/82AS3	blue Green-blue			
	08/77-07/82AS4	Black Green-blue			
	08/77-07/82AS5	Black Brown-beige			
	08/77-07/82AS6	brown Brown-beige			
	08/77-07/82AS7	beige Brown-beige			
(31)	928 522 037 51	Backrest cover Leather Berber fabric	left	1	
	08/77-07/82AK6	Grey/black Grey/black			
	08/77-07/82AK7	Leather Blue/black			
	08/77-07/82AK8	Leather Beige/brown			
	08/77-07/82AK9	Beige/brown Beige/brown			
(31)	928 522 038 51	Backrest cover Leather Berber fabric	right	1	
	08/77-07/82AK6	Grey/black Grey/black			
	08/77-07/82AK7	Blue/black Blue/black			

Model	Year	MG	SG	Illustration	Restrictions	UPD	7:26	27.10.2023
928	1978	8	08	808-045		738		

Pos	Part Number	Description	Remark	Qty	Model
	08/77-07/82AK8	Beige/brown Beige/brown			
	08/77-07/82AK9	Beige/brown Beige/brown			
(31)	928 522 037 51	Backrest cover Leather Design:	left Striped	1	PR:406
	08/77-07/82HS6	wine red Burgundy-grey			
(31)	928 522 038 51	Backrest cover Leather Design:	right Striped	1	PR:406
	08/77-07/82HS6	Leather Burgundy-grey			
32	928 522 051 03	Carpet for Emergency seat backrest	left	1	
	08/77-07/8220E	green			
	08/77-07/8240E	brown			
	08/77-07/8270E	Black			
	08/77-07/8241D	Cork			
	08/77-07/8230B	blue			
	08/77-07/8250B	beige			
	08/77-07/8280E	wine red			
(32)	928 522 052 03	Carpet for Emergency seat backrest	right	1	
	08/77-07/8220E	green			
	08/77-07/8240E	brown			
	08/77-07/8270E	Black			
	08/77-07/8241D	Cork			
	08/77-07/8230B	blue			
	08/77-07/8250B	beige			
	08/77-07/8280E	wine red			
33	928 522 321 02	Pocket		2	
	08/77-07/8270B	Black			

Model	Year	MG	SG	Illustration	Restrictions	UPD	7:26	27.10.2023
928	1978	8	08	808-050		738		

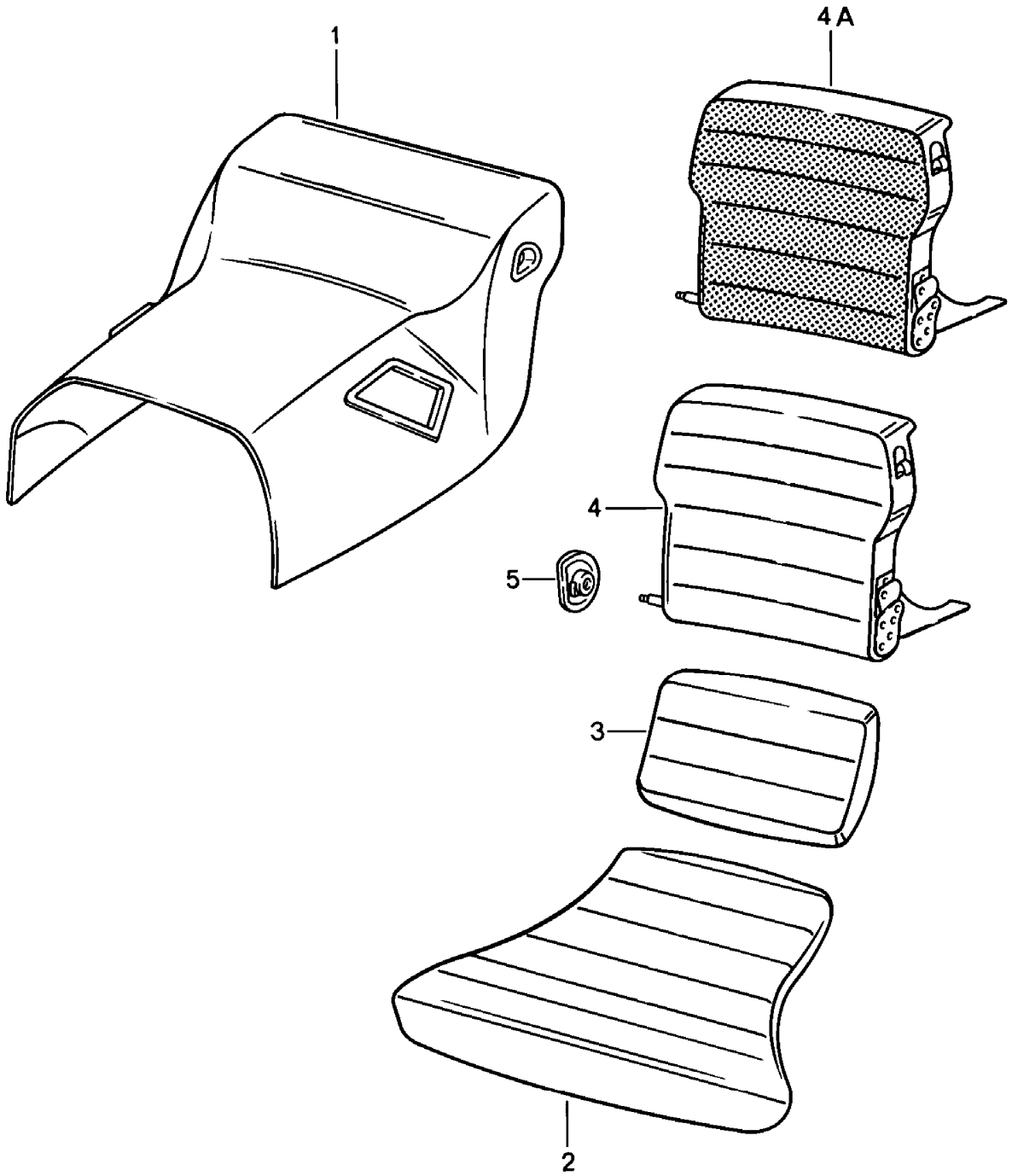

Model	Year	MG	SG	Illustration	Restrictions	UPD	7:26	27.10.2023
928	1978	8	08	808-050		738		

Pos	Part Number	Description	Remark	Qty	Model
		Emergency seat Trim tunnel without: Stowage box			
1	928 522 345 30	Trim tunnel Leatherette D - MJ 1980>> Discontinued part		1	928
	08/79-07/8221S	brown			
	08/79-07/8205T	Black			
	08/79-07/8230B	blue			
	08/79-07/8250B	beige			
1	928 522 345 31	Trim tunnel Leatherette D - MJ 1980>> Discontinued part		1	928AUT.
	08/79-07/8221S	brown			
	08/79-07/8205T	Black			
	08/79-07/8230B	blue			
	08/79-07/8250B	beige			
1	928 522 345 50	Trim tunnel Leather D - MJ 1980>> Discontinued part		1	
	08/79-07/821AJ	Black			
	08/79-07/8230B	blue			
	08/79-07/8250B	beige			
	08/79-07/823NG	brown			
	08/79-07/8280S	Can-can-red			
	08/79-07/8295S	Papyrus			
	08/79-07/8260S	Hannibal grey			
	08/79-07/8220S	Leather			
1	928 522 345 51	Trim tunnel Leather D - MJ 1980>> Discontinued part		1	AUT.

Model	Year	MG	SG	Illustration	Restrictions	UPD	7:26	27.10.2023
928	1978	8	08	808-050		738		

Pos	Part Number	Description	Remark	Qty	Model
	08/79-07/821AJ	Black			
	08/79-07/8230B	blue			
	08/79-07/8250B	beige			
	08/79-07/823NG	brown			
	08/79-07/8280S	Can-can-red			
	08/79-07/8295S	Papyrus			
	08/79-07/8260S	Hannibal grey			
	08/79-07/8220S	Leather			
2	928 522 059 30	Seat cushion Checker board velour D - MJ 1980>>	left front	1	928
	08/79-07/8247A	brown/black			
	08/79-07/8237A	Blue/black			
	08/79-07/821BV	Grey/black			
	08/79-07/824NV	Beige/brown			
2	928 522 060 30	Seat cushion Checker board velour D - MJ 1980>>	right front	1	928
	08/79-07/8247A	brown/black			
	08/79-07/8237A	Blue/black			
	08/79-07/821BV	Grey/black			
	08/79-07/824NV	Beige/brown			
2	928 522 059 30	Seat cushion Fabric D - MJ 1980>>	left	1	928
	08/79-07/8230C	blue			
	08/79-07/8240C	brown			
	08/79-07/8250C	beige			
	08/79-07/8270F	Black			
2	928 522 060 30	Seat cushion Fabric D - MJ 1980>>	right	1	928
	08/79-07/8230C	blue			
	08/79-07/8240C	brown			

Model	Year	MG	SG	Illustration	Restrictions	UPD	7:26	27.10.2023
928	1978	8	08	808-050		738		

Pos	Part Number	Description	Remark	Qty	Model
	08/79-07/8250C	beige			
	08/79-07/8270F	Black			
2	928 522 059 30	Seat cushion Tartan cloth D - MJ 1980>>	left	1	928
	08/79-07/8283S	Red-blue			
	08/79-07/8223A	Seat cushion			
	08/79-07/8245A	Seat cushion			
2	928 522 060 30	Seat cushion Tartan cloth D - MJ 1980>>	right	1	928
	08/79-07/8283S	Red-blue			
	08/79-07/8223A	Seat cushion			
	08/79-07/8245A	Seat cushion			
2	928 522 059 30	Seat cushion Berber fabric D - MJ 1980>>	left	1	928
	08/79-07/8237B	Blue/black			
	08/79-07/828NB	Beige/brown			
	08/79-07/821GB	Grey/black			
2	928 522 060 30	Seat cushion Berber fabric D - MJ 1980>>	right	1	928
	08/79-07/8237B	Blue/black			
	08/79-07/828NB	Beige/brown			
	08/79-07/821GB	Grey/black			
2	928 522 059 60	Seat cushion Leather D - MJ 1980>>	left front	1	PR:409
	08/79-07/821AJ	Black			
	08/79-07/8230B	blue			
	08/79-07/8250B	beige			
	08/79-07/823NG	brown			
	08/79-07/8280S	Can-can-red			
	08/79-07/8295S	Papyrus			

Model	Year	MG	SG	Illustration	Restrictions	UPD	7:26	27.10.2023
928	1978	8	08	808-050		738		

Pos	Part Number	Description	Remark	Qty	Model
	08/79-07/8260S	Hannibal grey			
	08/79-07/8220S	Leather			
2	928 522 060 60	Seat cushion Leather D - MJ 1980>>	right front	1	PR:409
	08/79-07/821AJ	Black			
	08/79-07/8230B	blue			
	08/79-07/8250B	beige			
	08/79-07/823NG	brown			
	08/79-07/8280S	Can-can-red			
	08/79-07/8295S	Papyrus			
	08/79-07/8260S	Hannibal grey			
	08/79-07/8220S	Leather			
3	928 522 045 30	Seat cushion Checker board velour D - MJ 1980>>	left upper	1	928
	08/79-07/8247A	brown/black			
	08/79-07/8237A	Blue/black			
	08/79-07/821BV	Grey/black			
	08/79-07/824NV	Beige/brown			
3	928 522 046 30	Seat cushion Checker board velour D - MJ 1980>>	right upper	1	928
	08/79-07/8247A	brown/black			
	08/79-07/8237A	Blue/black			
	08/79-07/821BV	Grey/black			
	08/79-07/824NV	Beige/brown			
3	928 522 045 30	Seat cushion Fabric D - MJ 1980>>	left	1	928
	08/79-07/8230C	Blue/black			
	08/79-07/8240C	brown			
	08/79-07/8250C	beige			

Model	Year	MG	SG	Illustration	Restrictions	UPD	7:26	27.10.2023
928	1978	8	08	808-050		738		

Pos	Part Number	Description	Remark	Qty	Model
	08/79-07/8270F	Black			
3	928 522 046 30	Seat cushion Fabric D - MJ 1980>>	right	1	928
	08/79-07/8230C	blue			
	08/79-07/8240C	brown			
	08/79-07/8250C	beige			
	08/79-07/8270F	Black			
3	928 522 045 30	Seat cushion Tartan cloth D - MJ 1980>>	left	1	928
	08/79-07/8283S	Red-blue			
	08/79-07/8223A	Seat cushion			
	08/79-07/8245A	Seat cushion			
3	928 522 046 30	Seat cushion Tartan cloth D - MJ 1980>>	right	1	928
	08/79-07/8283S	Red-blue			
	08/79-07/8223A	Seat cushion			
	08/79-07/8245A	Seat cushion			
3	928 522 045 30	Seat cushion Berber fabric D - MJ 1980>>	left	1	928
	08/79-07/8237B	Blue/black			
	08/79-07/828NB	Beige/brown			
	08/79-07/821GB	Grey/black			
3	928 522 046 30	Seat cushion Berber fabric D - MJ 1980>>	right	1	928
	08/79-07/8237B	Blue/black			
	08/79-07/828NB	Beige/brown			
	08/79-07/821GB	Grey/black			
3	928 522 045 60	Seat cushion Leather D - MJ 1980>>	left upper	1	PR:409
	08/79-07/821AJ	Black			

Model	Year	MG	SG	Illustration	Restrictions	UPD	7:26	27.10.2023
928	1978	8	08	808-050		738		

Pos	Part Number	Description	Remark	Qty	Model
	08/79-07/8230B	blue			
	08/79-07/8250B	beige			
	08/79-07/823NG	brown			
	08/79-07/8280S	Can-can-red			
	08/79-07/8295S	Papyrus			
	08/79-07/8260S	Hannibal grey			
	08/79-07/8220S	Leather			
3	928 522 046 60	Seat cushion Leather D - MJ 1980>>	right upper	1	PR:409
	08/79-07/821AJ	Black			
	08/79-07/8230B	blue			
	08/79-07/8250B	beige			
	08/79-07/823NG	brown			
	08/79-07/8280S	Can-can red/black			
	08/79-07/8295S	Papyrus			
	08/79-07/8260S	Hannibal grey			
	08/79-07/8220S	Leather			
4	928 522 005 60	Back seat backrest Leather D - MJ 1980>>	left	1	PR:409
	08/79-07/821AJ	Black			
	08/79-07/8230B	blue			
	08/79-07/823NG	brown			
	08/79-07/8250B	beige			
	08/79-07/8280S	Can-can-red			
	08/79-07/8295S	Papyrus			
	08/79-07/8260S	Hannibal grey			
	08/79-07/8220S	Leather			
(4)	928 522 006 60	Back seat backrest Leather D - MJ 1980>>	right	1	PR:409
	08/79-07/821AJ	Black			

Model	Year	MG	SG	Illustration	Restrictions	UPD	7:26	27.10.2023
928	1978	8	08	808-050		738		

Pos	Part Number	Description	Remark	Qty	Model
	08/79-07/8230B	blue			
	08/79-07/823NG	brown			
	08/79-07/8250B	beige			
	08/79-07/8280S	Can-can-red			
	08/79-07/8295S	Papyrus			
	08/79-07/8260S	Hannibal grey			
	08/79-07/8220S	Leather			
4A	928 522 005 30	Back seat backrest Leatherette Checker board velour	left	1	928
	08/77-07/82AE2	brown brown/black			
	08/77-07/82AE4	Black brown/black			
	08/77-07/82AE5	Black Blue/black			
	08/77-07/82BC1	blue Blue/black			
	08/77-07/82FD8	Back seat backrest Grey/black			
	08/77-07/82FD9	brown Beige/brown			
	08/77-07/82BC4	beige Beige/brown			
	08/77-07/82AM5	beige brown/black			
(4A)	928 522 006 30	Back seat backrest Leatherette Checker board velour	right	1	928
	08/77-07/82AE2	brown brown/black			
	08/77-07/82AE4	Black brown/black			
	08/77-07/82AE5	Black Blue/black			
	08/77-07/82BC1	blue Blue/black			
	08/77-07/82FD8	Back seat backrest Grey/black			

Model	Year	MG	SG	Illustration	Restrictions	UPD	7:26	27.10.2023
928	1978	8	08	808-050		738		

Pos	Part Number	Description	Remark	Qty	Model
	08/77-07/82FD9	brown Beige/brown			
	08/77-07/82BC4	beige Beige/brown			
	08/77-07/82AM5	beige brown/black			
4A	928 522 005 30	Back seat backrest Leatherette Fabric	left	1	928
	08/77-07/82BD1	Blue/blue			
	08/77-07/82AN2	brown			
	08/77-07/82BD3	beige			
	08/77-07/82BD4	black/black			
	08/77-07/82BD5	Brown/beige			
(4A)	928 522 006 30	Back seat backrest Leatherette Fabric	right	1	928
	08/77-07/82BD1	Blue/blue			
	08/77-07/82AN2	brown			
	08/77-07/82BD3	beige			
	08/77-07/82BD4	black/black			
	08/77-07/82BD5	Brown/beige			
4A	928 522 005 30	Back seat backrest Leatherette Tartan cloth	left	1	928
	08/77-07/82AP1	blue Red-blue			
	08/77-07/82AP2	Black Red-blue			
	08/77-07/82AP3	blue Green-blue			
	08/77-07/82AP4	Black Green-blue			
	08/77-07/82AP5	Black Brown-beige			
	08/77-07/82AP6	brown Brown-beige			
	08/77-07/82AP7	beige Brown-beige			

Model	Year	MG	SG	Illustration	Restrictions	UPD	7:26	27.10.2023
928	1978	8	08	808-050		738		

Pos	Part Number	Description	Remark	Qty	Model
(4A)	928 522 006 30	Back seat backrest Leatherette Tartan cloth	right	1	928
	08/77-07/82AP1	blue Red-blue			
	08/77-07/82AP2	Black Red-blue			
	08/77-07/82AP3	blue Green-blue			
	08/77-07/82AP4	Black Green-blue			
	08/77-07/82AP5	Black Brown-beige			
	08/77-07/82AP6	brown Brown-beige			
	08/77-07/82AP7	beige Brown-beige			
4A	928 522 005 30	Back seat backrest Leatherette Berber fabric	left	1	928
	08/77-07/82GE9	Black Grey/black			
	08/77-07/82BD7	blue Blue/black			
	08/77-07/82FE3	brown Beige/brown			
	08/77-07/82BD9	beige Beige/brown			
(4A)	928 522 006 30	Back seat backrest Leatherette Berber fabric	right	1	928
	08/77-07/82GE9	Black Grey/black			
	08/77-07/82BD7	blue Blue/black			
	08/77-07/82FE3	brown Beige/brown			
	08/77-07/82BD9	beige Beige/brown			
5	928 522 619 30	Rosette Backrest		2	

Model	Year	MG	SG	Illustration	Restrictions	UPD	7:26	27.10.2023
928	1978	8	09	809-000		738		

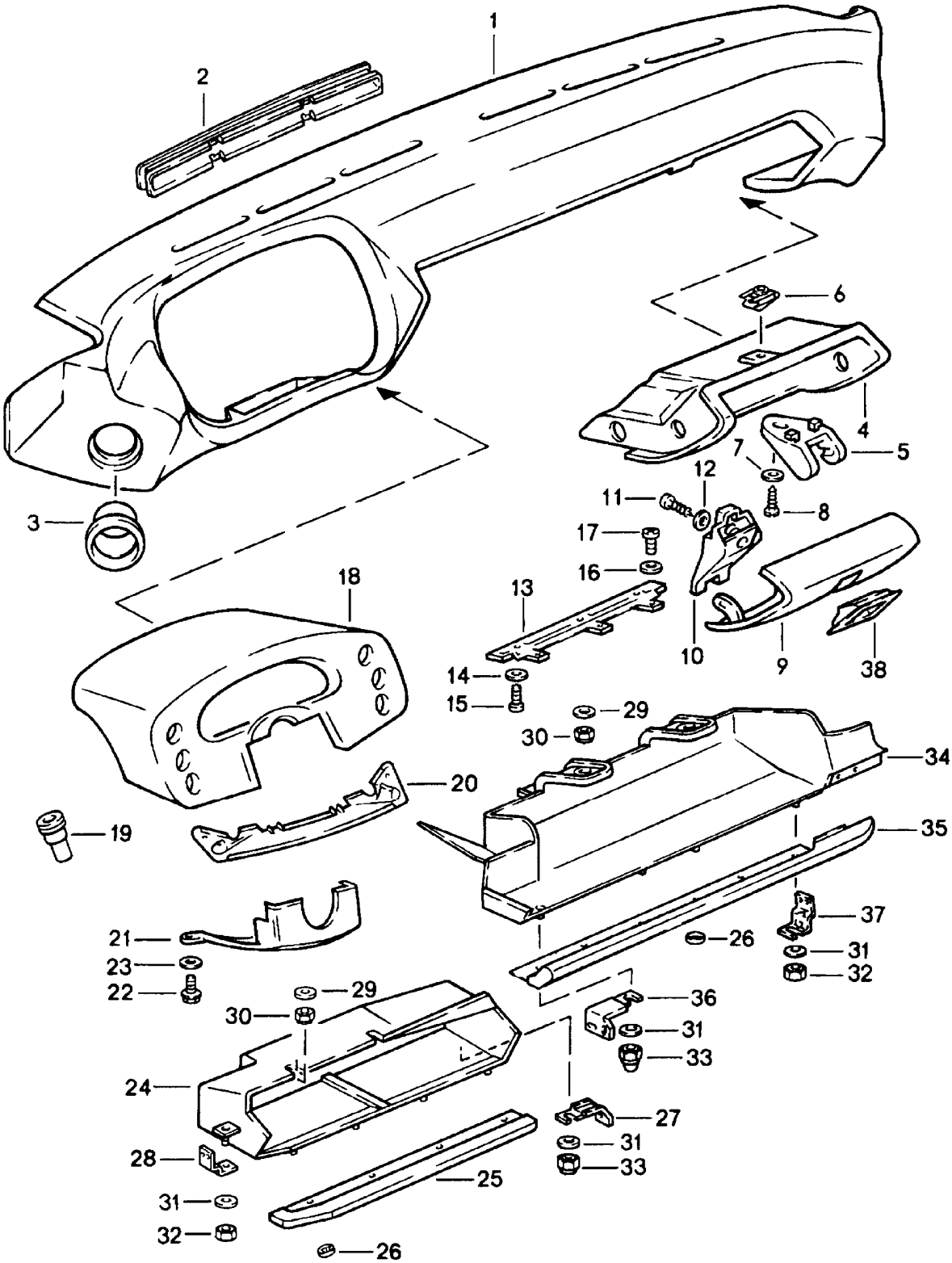

Model	Year	MG	SG	Illustration	Restrictions	UPD	7:26	27.10.2023
928	1978	8	09	809-000		738		

Pos	Part Number	Description	Remark	Qty	Model
		dashboard			
1	928 552 023 04	Instrument panel trim Leatherette	lhd	1	
	08/77-07/8205T	Black			
	08/77-07/8221S	brown			
	08/77-07/8220B	Dark green			
	08/77-07/8240D	Cork			
	08/77-07/8230B	blue			
(1)	927 552 023 04	Instrument panel trim Leatherette	rhd	1	
	08/77-07/8205T	Black			
	08/77-07/8221S	brown			
	08/77-07/8220B	Dark green			
	08/77-07/8240D	Cork			
	08/77-07/8230B	blue			
1	928 552 021 52	Instrument panel trim Leather	lhd	1	
	08/77-07/821AJ	Black			
	08/77-07/8220B	Dark green			
	08/77-07/823NG	brown			
	08/77-07/8240D	Cork			
	08/77-07/8230B	blue			
	08/77-07/8250B	beige			
	08/77-07/8260S	Hannibal grey			
	08/77-07/8220S	Mint green			
(1)	927 552 021 52	Instrument panel trim Leather	rhd	1	
	08/77-07/821AJ	Black			
	08/77-07/8220B	Dark green			
	08/77-07/823NG	brown			
	08/77-07/8240D	Cork			
	08/77-07/8230B	blue			
	08/77-07/8250B	beige			

Model	Year	MG	SG	Illustration	Restrictions	UPD	7:26	27.10.2023
928	1978	8	09	809-000		738		

Pos	Part Number	Description	Remark	Qty	Model
	08/77-07/8260S	Hannibal grey			
	08/77-07/8220S	Mint green			
(1)	928 552 021 52	Instrument panel trim Leather D - MJ 1982>> - MJ 1982	lhd	1	
	08/81-07/822LB	wine red			
2	928 552 309 50	Defroster trim	left	1	
	08/77-07/825XJ	Black			
2	928 552 310 50	Defroster trim	right	1	
	08/77-07/825XJ	Black			
3	928 552 057 02	Trim Discontinued part		2	
3	928 552 057 03	Trim Air guide		2	
4	928 552 051 02	Glove box Discontinued part	lhd	1	
4	928 552 051 02	Glove box D - MJ 1978>> - MJ 1978	lhd	1	
4	928 552 051 05	Glove box D - MJ 1979>>	lhd	1	
	08/78-07/8271B	Black			
(4)	927 552 051 05	Glove box	rhd	1	
	08/77-07/8271B	Black			
5	928 552 253 03	Closing element D >> - MJ 1979 Discontinued part		1	
5	928 552 253 03	Closing element		1	
6	999 507 029 02	panel nut 4,8		2	
7	900 151 002 07	Washer A 5,3		2	
8	900 143 019 07	oval head panel screw B 4,8 X 22		2	
9	928 552 053 02	Cover D - MJ 1978>> - MJ 1978 Discontinued part	lhd	1	
	08/77-07/7820B	Dark green			

Model	Year	MG	SG	Illustration	Restrictions	UPD	7:26	27.10.2023
928	1978	8	09	809-000		738		

Pos	Part Number	Description	Remark	Qty	Model
9	928 552 053 03	Cover Leatherette D - MJ 1979>> Discontinued part	lhd	1	
	08/78-07/82CA1	Black			
	08/78-07/82CA2	Dark green			
	08/78-07/82CA3	brown			
	08/78-07/82CB3	Cork			
	08/78-07/82CC2	blue			
(9)	927 552 053 03	Cover Leatherette Discontinued part	rhd	1	
	08/77-07/82CA1	Black			
	08/77-07/82CA2	Dark green			
	08/77-07/82CA3	brown			
	08/77-07/82CB3	Cork			
	08/77-07/82CC2	blue			
9	928 552 053 04	Glove compartment lid Leatherette	lhd	1	
	08/77-07/82CA1	Black			
	08/77-07/82CA2	Dark green			
	08/77-07/82CA3	brown			
	08/77-07/82CB3	Cork			
	08/77-07/82CC2	blue			
(9)	927 552 053 04	Glove compartment lid Leatherette	rhd	1	
	08/77-07/82CA1	Black			
	08/77-07/82CA2	Dark green			
	08/77-07/82CA3	brown			
	08/77-07/82CB3	Cork			
	08/77-07/82CC2	blue			
(9)	928 552 059 52	Glove compartment lid Leather	lhd	1	
	08/77-07/821AJ	Black			
	08/77-07/8220B	Dark green			

Model	Year	MG	SG	Illustration	Restrictions	UPD	7:26	27.10.2023
928	1978	8	09	809-000		738		

Pos	Part Number	Description	Remark	Qty	Model
	08/77-07/823NG	brown			
	08/77-07/8240D	Cork			
	08/77-07/8230B	blue			
	08/77-07/8250B	beige			
	08/77-07/8260S	Hannibal grey			
	08/77-07/8220S	Mint green			
	08/77-07/822LB	wine red			
(9)	927 552 059 52	Glove compartment lid Leather	rhd	1	
	08/77-07/821AJ	Black			
	08/77-07/8220B	Dark green			
	08/77-07/823NG	brown			
	08/77-07/8240D	Cork			
	08/77-07/8230B	blue			
	08/77-07/8250B	beige			
	08/77-07/8260S	Hannibal grey			
	08/77-07/8220S	Mint green			
	08/77-07/822LB	wine red			
10	928 552 903 02	catch Cover with lock cylinder with stipulated lock number When ordering, please provide the vehicle identification and the lock number		1	
11	900 143 113 07	fillister hd. bolt B 4,2 X 13 Discontinued part		2	
11	900 143 113 0G	fillister hd. bolt B 4,2 X 13		2	
12	N 011 523 11	Washer A 5,3		2	
13	928 552 055 03	Hinge Glove box		1	
14	900 151 002 07	Washer A 5,3		3	

Model	Year	MG	SG	Illustration	Restrictions	UPD	7:26	27.10.2023
928	1978	8	09	809-000		738		

Pos	Part Number	Description	Remark	Qty	Model
15	N 014 133 8	fillister hd. bolt AM 5 X 12 Discontinued part		3	
15	N 014 133 I	fillister hd. bolt AM 5 X 12		3	
16	N 011 523 11	Washer A 5,3		3	
17	N 014 128 13	fillister hd. bolt AM 5 X 8		3	
18	928 552 031 02	Instrument box Discontinued part		1	
	08/77-07/8205T	Black			
	08/77-07/822LB	wine red			
18	928 552 031 03	Instrument box		1	
	08/77-07/8205T	Black			
	08/77-07/822LB	wine red			
19	928 552 049 02	spacer sleeve		4	
20	928 552 321 02	Cover		1	
21	928 552 135 03	Cover		1	
	08/77-07/8205T	Black			
	08/77-07/822LB	wine red			
22	211 829 155	Hexagon bolt		2	
23	900 025 007 02	Washer A 8,4 Discontinued part		2	
23	900 025 007 03	Washer A 8,4		2	
24	928 552 117 02	Stowage compartment (drivers side) D - MJ 1982>> - MJ 1982		1	
	08/81-07/8271B	Black			
25	928 552 127 02	Edge protection Stowage compartment Leatherette D - MJ 1982>> - MJ 1982		1	
	08/81-07/8205T	Black			
	08/81-07/8230B	blue			
	08/81-07/8221S	brown			

Model	Year	MG	SG	Illustration	Restrictions	UPD	7:26	27.10.2023
928	1978	8	09	809-000		738		

Pos	Part Number	Description	Remark	Qty	Model
25	928 552 127 50	Edge protection Stowage compartment Leather D - MJ 1982>> - MJ 1982		1	
	08/81-07/821AJ	Black			
	08/81-07/8230B	blue			
	08/81-07/823NG	brown			
	08/81-07/82LG7	wine red			
26	999 507 251 02	Securing clip		7	
27	927 552 381 02	Supporting bracket D - MJ 1982>> - MJ 1982		1	
28	928 552 395 02	Supporting bracket D - MJ 1982>> - MJ 1982		1	
29	N 011 524 7	Washer A 6,4 Discontinued part		2	
29	N 011 524 27	Washer A 6,4		2	
30	900 085 003 02	domed cap nut M 6		2	
31	900 151 027 02	Washer A 5,3 Discontinued part		2	
31	900 151 027 03	Washer A 5,3		2	
32	N 011 005 14	Hexagon nut M 5 Discontinued part		1	
32	900 076 091 01	Hexagon nut M 5		1	
33	N 011 141 2	domed cap nut M 5		1	
34	928 552 077 02	Stowage compartment	lhd	1	
	08/77-07/8271B	Black			
(34)	927 552 077 02	Stowage compartment	rhd	1	
	08/77-07/8271B	Black			
35	928 552 079 02	Edge protection Stowage compartment Leatherette	lhd	1	
	08/77-07/8205T	Black			

Model	Year	MG	SG	Illustration	Restrictions	UPD	7:26	27.10.2023
928	1978	8	09	809-000		738		

Pos	Part Number	Description	Remark	Qty	Model
	08/77-07/8220B	Dark green			
	08/77-07/8221S	brown			
	08/77-07/8240D	Cork			
	08/77-07/8230B	blue			
(35)	927 552 079 02	Edge protection Stowage compartment Leatherette	rhd	1	
	08/77-07/8205T	Black			
	08/77-07/8220B	Dark green			
	08/77-07/8221S	brown			
	08/77-07/8240D	Cork			
	08/77-07/8230B	blue			
(35)	928 552 097 50	Edge protection Stowage compartment Leather	lhd	1	
	08/77-07/821AJ	Black			
	08/77-07/8220B	Dark green			
	08/77-07/823NG	brown			
	08/77-07/8250B	beige			
	08/77-07/8240D	Cork			
	08/77-07/8230B	blue			
	08/77-07/822LB	wine red			
(35)	927 552 097 50	Edge protection Stowage compartment Leather	rhd	1	
	08/77-07/821AJ	Black			
	08/77-07/8220B	Dark green			
	08/77-07/823NG	brown			
	08/77-07/8250B	beige			
	08/77-07/8240D	Cork			
	08/77-07/8230B	blue			
	08/77-07/822LB	wine red			
-	928 552 271 02	Retaining bracket		1	

Model	Year	MG	SG	Illustration	Restrictions	UPD	7:26	27.10.2023
928	1978	8	09	809-000		738		

Pos	Part Number	Description	Remark	Qty	Model
36	928 552 382 02	Supporting bracket Stowage compartment		1	
37	928 552 395 02	Supporting bracket Stowage compartment		1	
38	928 552 315 50	Rosette Cover		1	

Model	Year	MG	SG	Illustration	Restrictions	UPD	7:26	27.10.2023
928	1978	8	09	809-005		738		

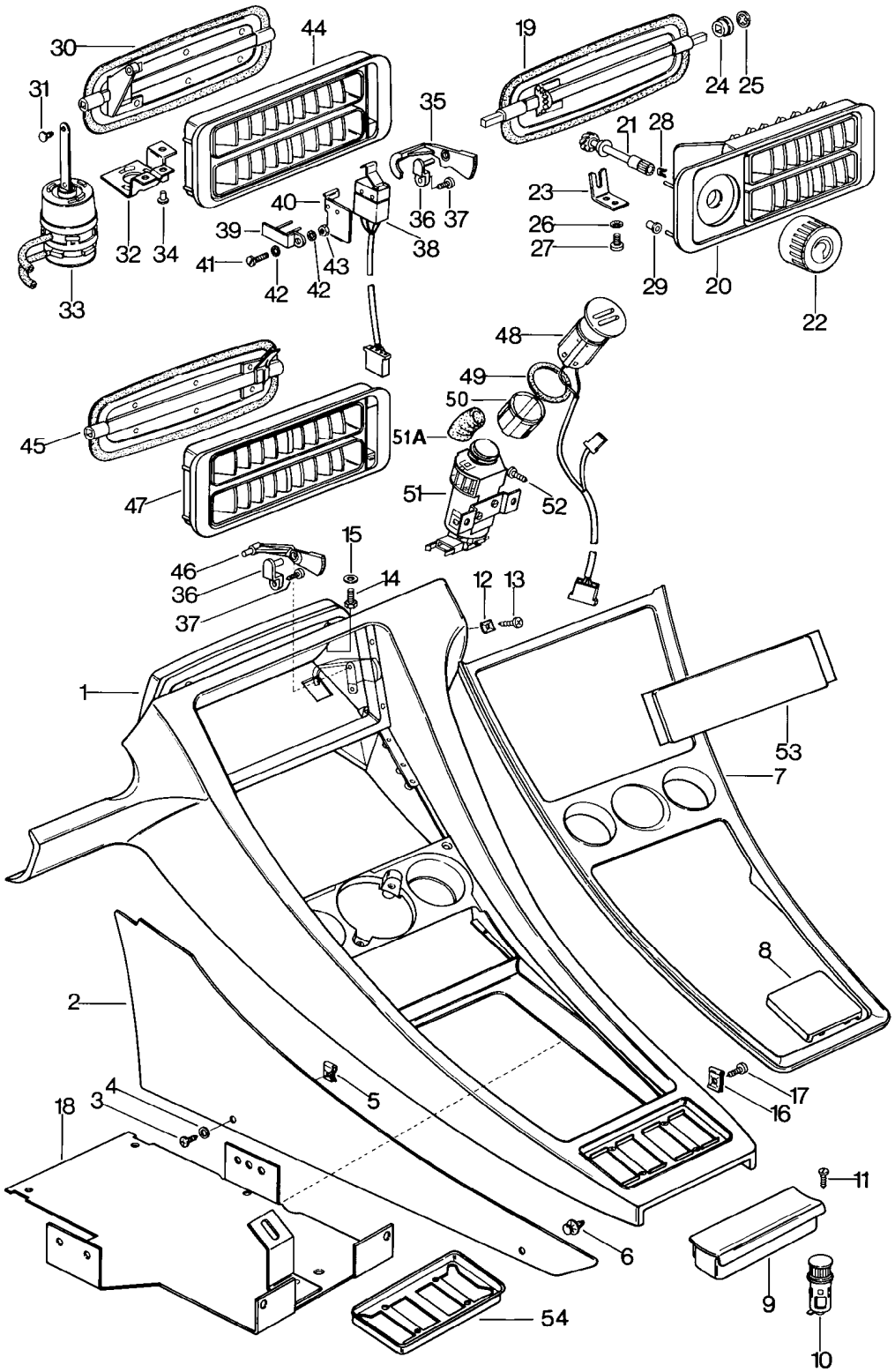

Model	Year	MG	SG	Illustration	Restrictions	UPD	7:26	27.10.2023
928	1978	8	09	809-005		738		

Pos	Part Number	Description	Remark	Qty	Model
		Centre console			
1	**928 552 043 02**	**Console for engine mounting** **Leatherette** **D - MJ 1978>> - MJ 1978**	**lhd**	**1**	
	08/77-07/78CA4	**Black**			
	08/77-07/78CA5	**Dark green**			
	08/77-07/78CA6	**brown**			
	08/77-07/78CB4	**Cork**			
(1)	**928 552 043 04**	**Centre console** **Leatherette** **D - MJ 1979>> - MJ 1979**	**lhd**	**1**	
	08/78-07/79CA4	**Black**			
	08/78-07/79CA5	**Dark green**			
	08/78-07/79CA6	**brown**			
	08/78-07/79CB4	**Cork**			
(1)	**927 552 043 04**	**Centre console** **Leatherette** **D - MJ 1979>> - MJ 1979**	**rhd**	**1**	
	08/78-07/79CA4	**Black**			
	08/78-07/79CA5	**Dark green**			
	08/78-07/79CA6	**brown**			
	08/78-07/79CB4	**Cork**			
(1)	**928 552 043 05**	**Centre console** **Leatherette** **D - MJ 1980>>**	**lhd**	**1**	
	08/79-07/82CA4	**Black**			
	08/79-07/82CC3	**blue**			
	08/79-07/82CA6	**brown**			
(1)	**927 552 043 05**	**Centre console** **Leatherette** **D - MJ 1980>>**	**rhd**	**1**	
	08/79-07/82CA4	**Black**			
	08/79-07/82CC3	**blue**			
	08/79-07/82CA6	**brown**			
(1)	**928 552 043 06**	**Centre console** **Leatherette** **D - MJ 1980>>**	**lhd**	**1**	**PR:563**

Model	Year	MG	SG	Illustration	Restrictions	UPD	7:26	27.10.2023
928	1978	8	09	809-005		738		

Pos	Part Number	Description	Remark	Qty	Model
	08/79-07/82CA4	Black			
	08/79-07/82CC3	blue			
	08/79-07/82CA6	brown			
(1)	927 552 043 06	Centre console Leatherette D - MJ 1980>>	rhd	1	PR:563
	08/79-07/82CA4	Black			
	08/79-07/82CC3	blue			
	08/79-07/82CA6	brown			
(1)	928 552 045 52	Centre console Leather D >> - MJ 1979	lhd	1	
	08/77-07/791AJ	Black			
	08/77-07/7920B	Dark green			
	08/77-07/793NG	brown			
	08/77-07/7940D	Cork			
(1)	927 552 045 52	Centre console Leather D >> - MJ 1979	rhd	1	
	08/77-07/791AJ	Black			
	08/77-07/7920B	Dark green			
	08/77-07/793NG	brown			
	08/77-07/7940D	Cork			
(1)	928 552 045 53	Centre console Leather D - MJ 1980>> - MJ 1982 Discontinued part	lhd	1	
	08/79-07/821AJ	Black			
	08/79-07/8230B	blue			
	08/79-07/823NG	brown			
	08/79-07/8260S	Hannibal grey			
(1)	927 552 045 53	Centre console Leather D - MJ 1980>> - MJ 1982 Discontinued part	rhd	1	
	08/79-07/821AJ	Black			
	08/79-07/8230B	blue			

Model	Year	MG	SG	Illustration	Restrictions	UPD	7:26	27.10.2023
928	1978	8	09	809-005		738		

Pos	Part Number	Description	Remark	Qty	Model
	08/79-07/823NG	brown			
	08/79-07/8260S	Hannibal grey			
(1)	928 552 045 54	Centre console Leather D - MJ 1980>>	lhd	1	PR:563
	08/79-07/821AJ	Black			
	08/79-07/8230B	blue			
	08/79-07/823NG	brown			
	08/79-07/8260S	Hannibal grey			
(1)	927 552 045 54	Centre console Leather D - MJ 1980>>	rhd	1	PR:563
	08/79-07/821AJ	Black			
	08/79-07/8230B	blue			
	08/79-07/823NG	brown			
	08/79-07/8260S	Hannibal grey			
(1)	928 552 045 54	Centre console Leather D - MJ 1982>>	lhd	1	
	08/81-07/822LB	wine red D - MJ 1982>> - MJ 1982			
2	928 552 073 02	Side part Carpet D >> - MJ 1978 Discontinued part	left long	1	
	08/77-07/7870A	Black D - MJ 1978>> - MJ 1978			
	08/77-07/7820B	Dark green D - MJ 1978>> - MJ 1978			
	08/77-07/7840A	brown D - MJ 1978>> - MJ 1978			
	08/77-07/7840D	Cork D - MJ 1978>> - MJ 1978			
2	927 552 073 02	side panel for center console Carpet D >> - MJ 1978	left long	1	
	08/77-07/7870A	Black D - MJ 1978>> - MJ 1978			
	08/77-07/7820B	Dark green D - MJ 1978>> - MJ 1978			

Model	Year	MG	SG	Illustration	Restrictions	UPD	7:26	27.10.2023
928	1978	8	09	809-005		738		

Pos	Part Number	Description	Remark	Qty	Model
	08/77-07/7840A	brown D - MJ 1978>> - MJ 1978			
	08/77-07/7840D	Cork D - MJ 1978>> - MJ 1978			
(2)	928 552 074 02	Side part Carpet D >> - MJ 1978	right long	1	
	08/77-07/7870A	Black D - MJ 1978>> - MJ 1978			
	08/77-07/7820B	Dark green D - MJ 1978>> - MJ 1978			
	08/77-07/7840A	brown D - MJ 1978>> - MJ 1978			
	08/77-07/7840D	Cork D - MJ 1978>> - MJ 1978			
2	928 552 073 02	Side part Carpet Discontinued part	left short	1	
	08/78-07/8270E	Black D - MJ 1979>>			
	08/78-07/7920E	green D - MJ 1979>> - MJ 1979			
	08/78-07/8240E	brown D - MJ 1979>>			
	08/78-07/7941D	Cork D - MJ 1979>> - MJ 1979			
	08/79-07/8230B	blue D - MJ 1980>>			
	08/79-07/8250B	beige D - MJ 1980>>			
	08/77-07/8280E	wine red			
2	927 552 073 02	side panel for center console Carpet	left short	1	
	08/78-07/8270E	Black D - MJ 1979>>			
	08/78-07/7920E	green D - MJ 1979>> - MJ 1979			
	08/78-07/8240E	brown D - MJ 1979>>			
	08/78-07/7941D	Cork D - MJ 1979>> - MJ 1979			

Model	Year	MG	SG	Illustration	Restrictions	UPD	7:26	27.10.2023
928	1978	8	09	809-005		738		

Pos	Part Number	Description	Remark	Qty	Model
	08/79-07/8230B	blue D - MJ 1980>>			
	08/79-07/8250B	beige D - MJ 1980>>			
	08/77-07/8280E	wine red			
(2)	928 552 074 02	Side part Carpet	right short	1	
	08/78-07/8270E	Black D - MJ 1979>>			
	08/78-07/7920E	green D - MJ 1979>> - MJ 1979			
	08/78-07/8240E	brown D - MJ 1979>>			
	08/78-07/7941D	Cork D - MJ 1979>> - MJ 1979			
	08/79-07/8230B	blue D - MJ 1980>>			
	08/79-07/8250B	beige D - MJ 1980>>			
	08/77-07/8280E	wine red			
3	N 014 098 6	oval hd. csk. self-tapp. screw B 4,8 X 16		4	
4	999 591 437 07	Hollow disc 4,8		4	
5	999 507 002 02	panel nut Discontinued part		2	
5	999 507 002 0B	panel nut		2	
6	823 867 299	Clip		2	
7	928 552 047 04	Trim D >> - MJ 1979		1	
(7)	928 552 047 05	Trim D - MJ 1980>>		1	
8	928 552 277 02	Trim for switch		1	
9	928 552 060 02	ashtray		1	
10	928 652 103 00	Cigarette lighter		1	
11	900 144 017 07	panel screw B 2,9 X 13		2	
12	999 507 030 02	panel nut 4,8		3	

Model	Year	MG	SG	Illustration	Restrictions	UPD	7:26	27.10.2023
928	1978	8	09	809-005		738		

Pos	Part Number	Description	Remark	Qty	Model
13	900 187 018 02	hexagon head panel screw B 4,8 X 16		1	
14	900 075 145 02	Hexagon bolt M 5 X 16		2	
15	900 025 003 02	Washer A 5,3		2	
16	999 507 002 02	panel nut Discontinued part		X	
16	999 507 002 0B	panel nut		X	
17	900 143 046 07	panel screw B 4,8 X 16		6	
18	928 552 085 02	Carrier plate governor and Receiver unit D >> - MJ 1979		1	
(18)	928 552 389 02	Carrier plate D - MJ 1980>>		1	
19	928 574 072 02	Flap jet D >> - MJ 1979	center	1	
20	928 574 040 02	Cover frame D >> - MJ 1979		1	
21	928 574 455 02	Gear wheel shaft D >> - MJ 1979		1	
22	928 574 453 02	Rot. knob D >> - MJ 1979		1	
23	928 552 187 03	Bracket D >> - MJ 1979		1	
24	928 574 291 02	Bearing bush		2	
25	999 591 459 02	Securing clip		2	
26	900 114 007 01	Toothed washer A 5,3 D >> - MJ 1979 Discontinued part		2	
26	900 114 007 0B	Toothed washer A 5,3		2	
27	N 014 128 13	fillister hd. bolt AM 5 X 8 D >> - MJ 1979		2	
28	999 591 434 02	Spring D >> - MJ 1979		1	

Model	Year	MG	SG	Illustration	Restrictions	UPD	7:26	27.10.2023
928	1978	8	09	809-005		738		

Pos	Part Number	Description	Remark	Qty	Model
29	999 702 111 50	Grommet		4	
30	928 573 137 02	Flap jet D - MJ 1980>>	center	1	PR:563
31	928 574 735 02	Pin		1	
32	928 573 315 02	Bracket D - MJ 1980>>		1	
33	928 573 094 02	Vacuum unit D - MJ 1980>>		1	
34	999 190 215 30	Pop rivet D - MJ 1980>>		3	
35	928 573 649 02	Actuating lever D - MJ 1980>>		1	
36	928 574 645 02	Securing element D - MJ 1980>>		1	
37	900 143 031 02	oval head panel screw B 4,2 X 9,5		1	
38	928 613 049 00	Micro switch D - MJ 1980>>		1	
39	928 573 747 02	Bracket D - MJ 1980>>		1	
40	928 573 745 02	Bracket D - MJ 1980>>		1	
41	900 119 024 02	Socket head bolt M 4 X 12		1	
42	N 042 122 2	Toothed washer		2	
43	N 011 004 6	Hexagon nut M 4 Discontinued part		1	
43	N 011 004 G	Nut M 4		1	
44	928 573 045 02	Cover frame for vehicles with Leatherette D - MJ 1980>>		1	PR:563
(44)	928 573 045 50	Cover frame for vehicles with Leather D - MJ 1980>>		1	PR:563
45	928 574 125 02	Flap jet D - MJ 1980>>	center	1	

Model	Year	MG	SG	Illustration	Restrictions	UPD	7:26	27.10.2023
928	1978	8	09	809-005		738		

Pos	Part Number	Description	Remark	Qty	Model
46	928 574 649 02	Actuating lever D - MJ 1980>>		1	
47	928 574 040 03	Cover frame for vehicles with Leatherette D - MJ 1980>>		1	
(47)	928 574 040 50	Cover frame for vehicles with Leather D - MJ 1980>>		1	
48	928 624 041 00	Temperature sensor D - MJ 1980>>	inner	1	
49	928 573 344 02	seal ring D - MJ 1980>>		1	
50	928 573 527 02	Connection piece D - MJ 1980>>		1	
51	928 624 113 01	Temperature sensor D - MJ 1980>>	inner	1	
51A	928 624 312 01	Hose	lhd	1	
(51A)	928 624 312 00	Hose	rhd	1	
52	N 013 968 7	panel screw B 4,8 X 13 Discontinued part		2	
52	900 143 097 01	panel screw B 4,8 X 13		2	
53	928 552 270 04	Trim D - MJ 1980>>		1	
54	928 552 313 50	Frame Switch for vehicles with Leather		1	

Model	Year	MG	SG	Illustration	Restrictions	UPD	7:27	27.10.2023
928	1978	8	09	809-010		738		

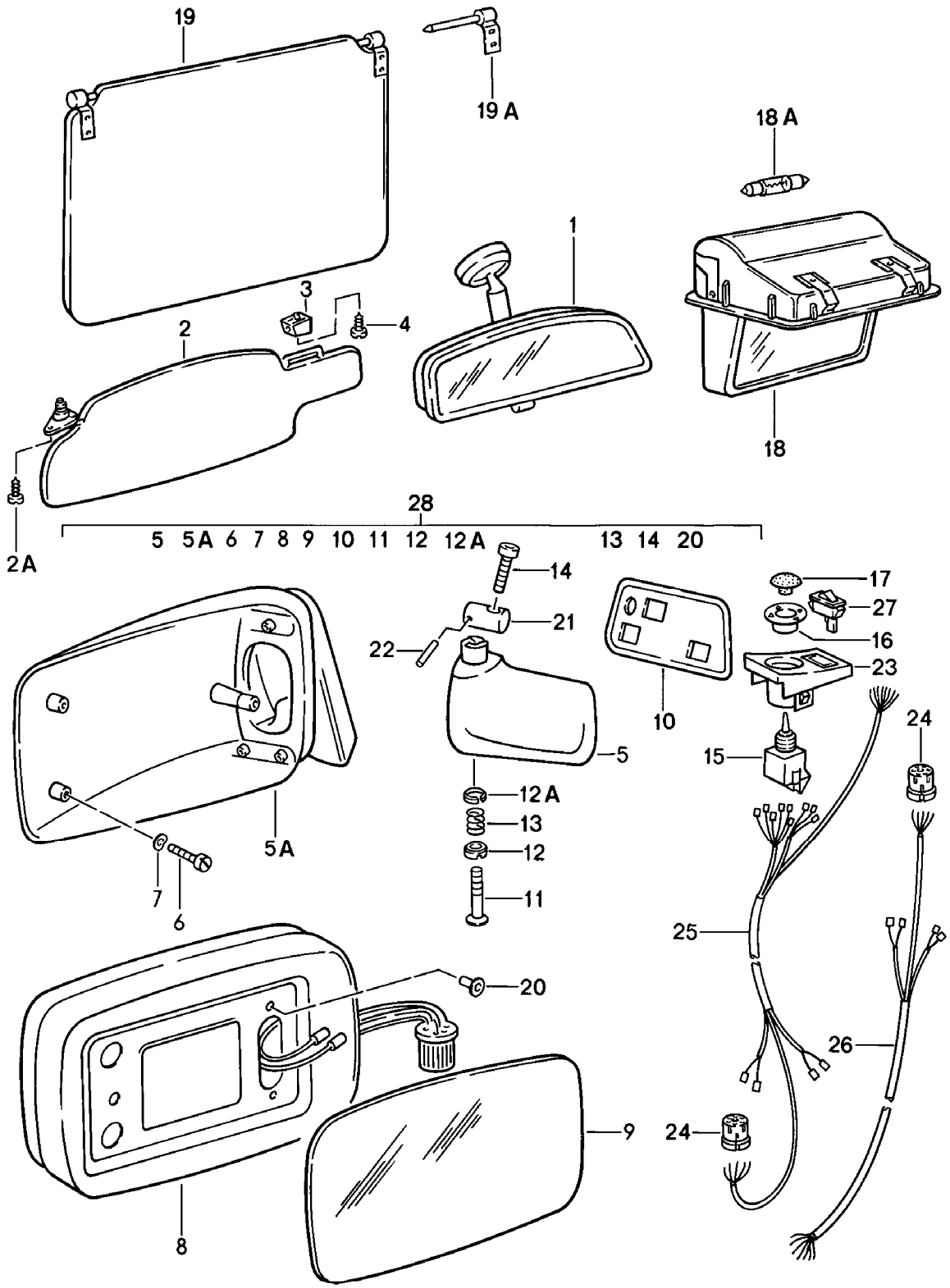

Model	Year	MG	SG	Illustration	Restrictions	UPD	7:27	27.10.2023
928	1978	8	09	809-010		738		

Pos	Part Number	Description	Remark	Qty	Model
		Sun visor **Exterior mirror** **Interior mirror**			
1	**477 857 511**	**Interior mirror** **Discontinued part**		**1**	
1	**477 857 511 A**	**Interior mirror** **Discontinued part**		**1**	
	08/77-07/8201C	**Satin black**			
1	**477 857 511 B**	**Interior mirror**		**1**	
	08/77-07/8201C	**Satin black**			
2	**928 731 031 02**	**Sun visor** **Leatherette** **D >> - MJ 1979**	**left**	**1**	
	08/77-07/79CB5	**Cork**			
	08/77-07/79CB1	**Dark green**			
	08/77-07/79CA9	**Black**			
	08/77-07/79CA7	**brown** **Discontinued part**			
(2)	**928 731 032 04**	**Sun visor without mirror** **Leatherette** **D >> - MJ 1979**	**right**	**1**	
	08/77-07/79CB5	**Cork**			
	08/77-07/79CB1	**Dark green**			
	08/77-07/79CA9	**Black**			
	08/77-07/79CA7	**brown** **Discontinued part**			
(2)	**928 731 032 02**	**Sun visor** **Leatherette** **D >> - MJ 1979**	**right**	**1**	
	08/77-07/79CB5	**Cork**			
	08/77-07/79CB1	**Dark green**			
	08/77-07/79CA9	**Black**			
	08/77-07/79CA7	**brown** **Discontinued part**			
(2)	**927 731 031 02**	**Sun visor with mirror** **Leatherette** **D >> - MJ 1979**	**left**	**1**	
	08/77-07/79CB5	**Cork**			

Model	Year	MG	SG	Illustration	Restrictions	UPD	7:27	27.10.2023
928	1978	8	09	809-010		738		

Pos	Part Number	Description	Remark	Qty	Model
	08/77-07/79CB1	Dark green			
	08/77-07/79CA9	Black			
	08/77-07/79CA7	brown Discontinued part			
(2)	928 731 031 06	Sun visor without mirror Leatherette D - MJ 1980>> Discontinued part	left	1	
	08/79-07/82CA9	Black			
	08/79-07/82CA7	brown			
	08/79-07/82CC1	blue			
(2)	928 731 031 11	Sun visor with mirror Leatherette D - MJ 1980>>	left	1	
	08/79-07/82CA9	Black			
	08/79-07/82CA7	brown			
	08/79-07/82CC1	blue			
(2)	928 731 032 07	Sun visor without mirror Leatherette D - MJ 1980>>	right	1	
	08/79-07/82CA9	Black			
	08/79-07/82CA7	brown			
	08/79-07/82CC1	blue			
(2)	928 731 032 06	Sun visor with mirror Leatherette D - MJ 1980>> Discontinued part	right	1	PR:650
	08/79-07/82CA9	Black			
	08/79-07/82CA7	brown			
	08/79-07/82CC1	blue			
(2)	928 731 032 11	Sun visor with mirror Leatherette D - MJ 1980>>	right	1	
	08/79-07/82CA9	Black			
	08/79-07/82CA7	brown			
	08/79-07/82CC1	blue			

Model	Year	MG	SG	Illustration	Restrictions	UPD	7:27	27.10.2023
928	1978	8	09	809-010		738		

Pos	Part Number	Description	Remark	Qty	Model
(2)	927 731 031 04	Sun visor with mirror Leatherette D - MJ 1980>>	left	1	PR:650
	08/79-07/82CA9	Black			
	08/79-07/82CA7	brown			
	08/79-07/82CC1	blue			
(2)	928 731 031 50	Sun visor without mirror Leather	left	1	
	08/77-07/7940D	Cork D >> - MJ 1979			
	08/77-07/7920B	Dark green D >> - MJ 1979			
	08/77-07/7940A	brown D >> - MJ 1979			
	08/77-07/7970A	Black D >> - MJ 1979			
	08/79-07/82BS1	Black D - MJ 1980>>			
	08/79-07/82BS2	brown D - MJ 1980>>			
	08/79-07/82BS3	blue D - MJ 1980>>			
	08/77-07/822LB	wine red			
(2)	928 731 032 50	Sun visor without mirror Leather	right	1	
	08/77-07/7940D	Cork D >> - MJ 1979			
	08/77-07/7920B	Dark green D >> - MJ 1979			
	08/77-07/7940A	brown D >> - MJ 1979			
	08/77-07/7970A	Black D >> - MJ 1979			
	08/79-07/82BS1	Black D - MJ 1980>>			
	08/79-07/82BS2	brown D - MJ 1980>>			
	08/79-07/82BS3	blue D - MJ 1980>>			
	08/77-07/822LB	wine red			

Model	Year	MG	SG	Illustration	Restrictions	UPD	7:27	27.10.2023
928	1978	8	09	809-010		738		

Pos	Part Number	Description	Remark	Qty	Model
(2)	927 731 031 50	Sun visor with mirror Leather	left	1	PR:650
	08/77-07/7940D	Cork D >> - MJ 1979			
	08/77-07/7920B	Dark green D >> - MJ 1979			
	08/77-07/7940A	brown D >> - MJ 1979			
	08/77-07/7970A	Black D >> - MJ 1979			
	08/79-07/82BS1	Black D - MJ 1980>>			
	08/79-07/82BS2	brown D - MJ 1980>>			
	08/79-07/82BS3	blue D - MJ 1980>>			
	08/77-07/822LB	wine red			
(2)	928 731 032 51	Sun visor with mirror Leather	right	1	
	08/77-07/7940D	Cork D >> - MJ 1979			
	08/77-07/7920B	Dark green D >> - MJ 1979			
	08/77-07/7940A	brown D >> - MJ 1979			
	08/77-07/7970A	Black D >> - MJ 1979			
	08/79-07/82BS1	Black D - MJ 1980>>			
	08/79-07/82BS2	brown D - MJ 1980>>			
	08/79-07/82BS3	blue D - MJ 1980>>			
	08/77-07/822LB	wine red			
2A	900 145 016 07	panel screw 4,2 X 16		4	
3	911 731 331 00	Retainer for sun visor		2	
3	911 731 331 00	Retainer for sun visor		2	PR:650

Model	Year	MG	SG	Illustration	Restrictions	UPD	7:27	27.10.2023
928	1978	8	09	809-010		738		

Pos	Part Number	Description	Remark	Qty	Model
4	N 013 962 3	panel screw 3,9 X 16 D >> - MJ 1980		2	
4	900 143 034 07	oval head panel screw 3,9 X 19 D - MJ 1981>>		2	
-	927 731 023 03	Mirror housing D - MJ 1978>> - MJ 1978 Discontinued part	rhd	X	
-	927 731 023 04	Mirror housing D - MJ 1979>>	rhd	1	
5	928 731 141 06	Mirror base Discontinued part	left lhd	1	
5	928 731 141 06	Mirror base	left lhd	1	
(5)	928 731 143 08	Mirror base Discontinued part	right lhd	1	
(5)	928 731 143 08	Mirror base	right lhd	1	
(5)	927 731 141 06	Mirror base Discontinued part	right rhd	1	
(5)	927 731 141 06	Mirror base	right rhd	1	
(5)	927 731 143 08	Mirror base Discontinued part	left rhd	1	
(5)	927 731 143 08	Mirror base	left rhd	1	
5A	911 731 043 00	Mirror cap Discontinued part	left	1	
5A	911 731 043 03	Mirror cap	left	1	
(5A)	911 731 044 00	Mirror cap Discontinued part	right	1	
(5A)	911 731 044 03	Mirror cap	right	1	
5AB	944 731 021 01	Mirror cap	left	1	
	08/77-07/82G3M	primed Mirror base Grey primed			
6	999 143 003 02	bolt, hexagon head self-locking M 5 X 12		3	
7	N 012 222 4	Spring washer A 5		3	
8	911 799 731 04	Cover frame Discontinued part	left	1	

Model	Year	MG	SG	Illustration	Restrictions	UPD	7:27	27.10.2023
928	1978	8	09	809-010		738		

Pos	Part Number	Description	Remark	Qty	Model
8	911 731 027 06	Cover frame	left	1	
(8)	911 731 028 06	Cover frame	right	1	
-		repair set for Cover frame Bayonet catch comprising:			
-	PCG 731 028 06	Central control unit for Engine Exterior mirror Bayonet catch	left a. right	1	
-	944 731 027 01	Cover frame with: Adjusting unit with motor for exterior mirror Bayonet catch	left a. right	1	
9	944 731 035 02	Mirror glass (flat) Bayonet catch also use:	 PCG73102806 94473102701	1 1 1	
9	944 731 035 04	Mirror glass (flat) Bayonet catch also use:	 PCG73102806 94473102701	1 1 1	"S.."
9	944 731 035 03	Mirror glass (convex) Bayonet catch also use:	 PCG73102806 94473102701	1 1 1	
9	944 731 035 05	Mirror glass (convex) Bayonet catch also use:	 PCG73102806 94473102701	1 1 1	"S.."
9	911 731 035 08	Mirror glass (flat)		1	
(9)	911 731 035 09	Mirror glass (convex)		1	"J..","S..", "N.."
10	928 731 247 03	Underlay	left lhd	1	
(10)	928 731 249 03	Underlay	right lhd	1	
(10)	927 731 247 03	Underlay	right rhd	1	
(10)	927 731 249 03	Underlay	left rhd	1	
11	911 731 257 02	guide tube		1	
11	911 731 257 03	guide tube		1	
12	911 731 345 02	Centring plate	lower	1	

Model	Year	MG	SG	Illustration	Restrictions	UPD	7:27	27.10.2023
928	1978	8	09	809-010		738		

Pos	Part Number	Description	Remark	Qty	Model
12A	911 731 347 00	Centring plate	upper	1	
13	911 731 029 01	Pressure spring		1	
14	999 218 019 02	Screw M 5 X 45 Discontinued part		1	
14	999 218 073 02	Socket head bolt M 5 X 45		1	
15	911 613 115 00	Switch		1	
16	928 555 463 02	Threaded bush		1	
17	928 613 462 00	knob		1	
18	928 731 013 02	Make-up mirror, illuminated		1	
18A	900 631 105 90	bulb 12 V - 5 W		1	
19	928 731 035 02	Sun visor Leatherette Discontinued part	rear	2	
	08/77-07/79CB7	Dark green D >> - MJ 1979			
	08/77-07/79CB8	Black D >> - MJ 1979			
	08/77-07/79CB6	brown D >> - MJ 1979			
	08/77-07/79CB9	Cork D >> - MJ 1979			
	08/79-07/8270A	Black D - MJ 1980>>			
	08/79-07/8230B	blue D - MJ 1980>>			
	08/79-07/8240A	brown D - MJ 1980>>			
19	928 731 035 04	Sun visor Leatherette	rear	2	
	08/77-07/79CB7	Dark green D >> - MJ 1979			
	08/77-07/79CB8	Black D >> - MJ 1979			
	08/77-07/79CB6	brown D >> - MJ 1979			
	08/77-07/79CB9	Cork D >> - MJ 1979			

Model	Year	MG	SG	Illustration	Restrictions	UPD	7:27	27.10.2023
928	1978	8	09	809-010		738		

Pos	Part Number	Description	Remark	Qty	Model
	08/79-07/8270A	Black D - MJ 1980>>			
	08/79-07/8230B	blue D - MJ 1980>>			
	08/79-07/8240A	brown D - MJ 1980>>			
19	928 731 035 50	Sun visor Leather Discontinued part	rear	2	
	08/77-07/7920B	Dark green D >> - MJ 1979			
	08/77-07/7940A	brown D >> - MJ 1979			
	08/77-07/7940D	Cork D >> - MJ 1979			
	08/77-07/7970A	Black D >> - MJ 1979			
	08/79-07/82BS1	Black D - MJ 1980>>			
	08/79-07/82BS2	brown D - MJ 1980>>			
	08/79-07/82BS3	blue D - MJ 1980>>			
	08/79-07/82SC3	Hannibal grey D - MJ 1980>>			
	08/79-07/82SD3	Mint green D - MJ 1980>>			
	08/77-07/822LB	wine red			
19	928 731 035 51	Sun visor Leather	rear	2	
	08/77-07/7920B	Dark green D >> - MJ 1979			
	08/77-07/7940A	brown D >> - MJ 1979			
	08/77-07/7940D	Cork D >> - MJ 1979			
	08/77-07/7970A	Black D >> - MJ 1979			
	08/79-07/82BS1	Black D - MJ 1980>>			

Model	Year	MG	SG	Illustration	Restrictions	UPD	7:27	27.10.2023
928	1978	8	09	809-010		738		

Pos	Part Number	Description	Remark	Qty	Model
	08/79-07/82BS2	brown D - MJ 1980>>			
	08/79-07/82BS3	blue D - MJ 1980>>			
	08/79-07/82SC3	Hannibal grey D - MJ 1980>>			
	08/79-07/82SD3	Mint green D - MJ 1980>>			
	08/77-07/822LB	wine red			
19A	928 731 043 02	Bracket	left	1	
19A	928 731 044 02	Bracket	right	1	
20	999 703 128 40	Grommet Exterior mirror		3	
21	928 531 235 03	threaded pin		2	
22	N 013 295 1	Spring pin		1	
23	928 555 461 02	Support section	lhd	1	
(23)	927 555 461 02	Support section	rhd	1	
24	803 971 979	rd. connector sleeve housing	7 pin	1	
-		Electrical parts Exterior mirror (passenger side)			
25	928 612 164 00	Wire set (drivers side) D >> - MJ 1979		1	
(25)	928 612 164 02	Wire set (drivers side) D - MJ 1980>>		1	
26	928 612 166 00	Wire set (passenger side) D >> - MJ 1979		1	
(26)	928 612 166 02	Wire set (passenger side) D - MJ 1980>>		1	
27	911 613 113 00	change-over switch Discontinued part		1	
27	911 613 113 01	change-over switch		1	
28	928 731 927 02	Exterior mirror (flat)	left lhd	1	
(28)	928 731 928 02	Exterior mirror (flat)	right lhd	1	

Model	Year	MG	SG	Illustration	Restrictions	UPD	7:27	27.10.2023
928	1978	8	09	809-010		738		

Pos	Part Number	Description	Remark	Qty	Model
(28)	928 731 929 02	Exterior mirror	left lhd Convex	1	
(28)	928 731 930 02	Exterior mirror Discontinued part	right lhd Convex	1	
(28)	927 731 927 02	Exterior mirror (flat)	left rhd	1	
(28)	927 731 928 02	Exterior mirror (flat)	right rhd	1	
(28)	927 731 929 02	Exterior mirror	left rhd Convex	1	

Model	Year	MG	SG	Illustration	Restrictions	UPD	7:27	27.10.2023
928	1978	8	09	809-015		738		

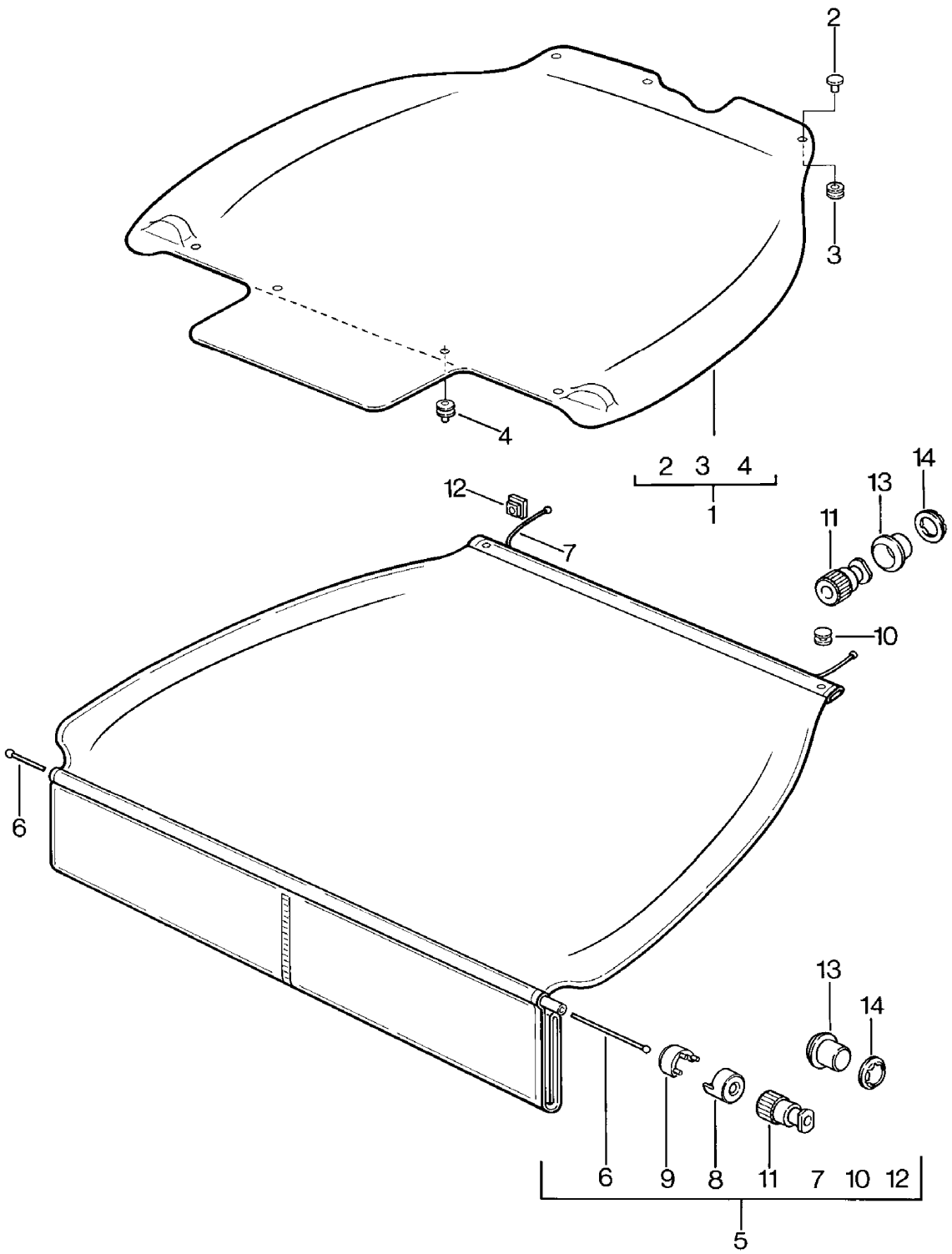

Model	Year	MG	SG	Illustration	Restrictions	UPD	7:27	27.10.2023
928	1978	8	09	809-015		738		

Pos	Part Number	Description	Remark	Qty	Model
		cover for luggage boot			
1	928 555 083 03	Luggage compartment trim D >> - MJ 1979	Pearl velour	1	
	08/77-07/7920B	Dark green			
	08/77-07/7940A	brown			
	08/77-07/7970A	Black			
2	999 591 802 17	Cap D >> - MJ 1979		4	
3	999 591 803 17	press stud-spring part D >> - MJ 1979		4	
4	999 591 607 12	press stud-upper part D >> - MJ 1979		4	
5	928 555 179 02	cover for luggage boot D - MJ 1980>>		1	
	08/79-07/8270G	Black			
	08/79-07/8230D	blue			
	08/79-07/8240B	brown			
	08/79-07/822LB	wine red			PR:406
-	999 701 639 40	cord D - MJ 1980>>		*	
6		shorten to: D - MJ 1980>>	1150 MM	1	
7		shorten to: D - MJ 1980>>	740 MM	2	
8	928 555 795 02	Tube D - MJ 1980>>		2	
9	928 555 785 02	Clip D - MJ 1980>>		2	
10	900 190 005 03	full tubular rivet B 4 X 9 X 6 D - MJ 1980>>		2	
11	928 555 775 02	end piece D - MJ 1980>>		4	
12	928 555 791 02	Rosette D - MJ 1980>>		2	
	08/79-07/8270B	Black			
13	928 555 777 02	flexible lock		4	
14	999 591 484 02	Clamping washer		4	

Model	Year	MG	SG	Illustration	Restrictions	UPD	7:27	27.10.2023
928	1978	8	10	810-000		738		

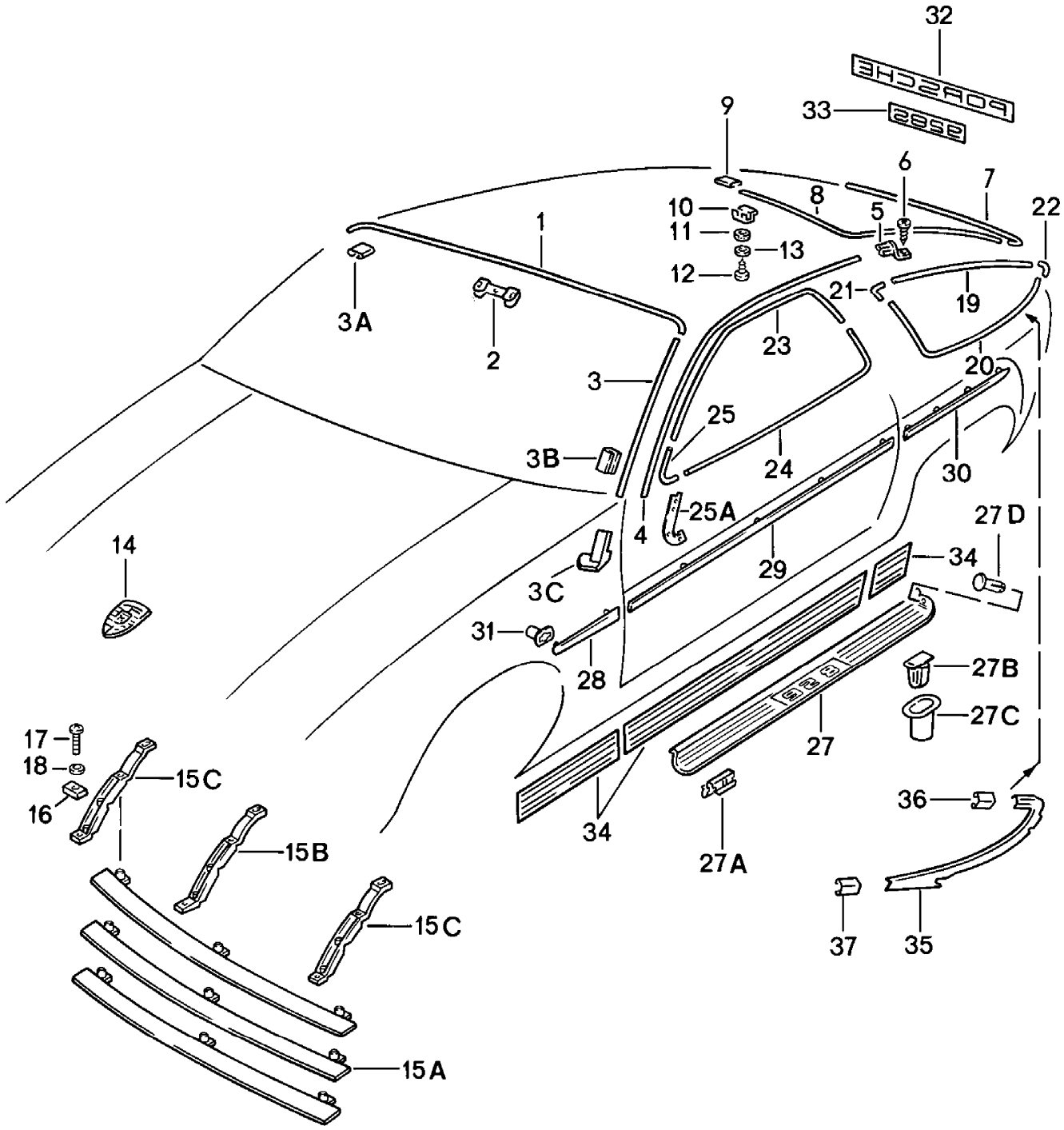

Model	Year	MG	SG	Illustration	Restrictions	UPD	7:27	27.10.2023
928	1978	8	10	810-000		738		

Pos	Part Number	Description	Remark	Qty	Model
		Cover trim Trim F >> 92-CS800 354 F >> 92-CS840 998 F 92-CS800 355>> F 92-CS840 999>> See TPI GR.8 NR.38			928 928S 928 928 S
1	928 559 103 02	Cover trim Discontinued part		1	
	08/77-07/8270H	Black			
1	928 559 103 04	Cover trim		1	
	08/77-07/8270K	Black			
2	928 559 285 02	Clamp		9	
3	928 559 105 02	Water deflector strip	left	1	
	08/77-07/8270H	Black			
3	928 559 106 02	Water deflector strip	right	1	
	08/77-07/8270H	Black			
3	928 559 105 05	Water deflector strip	left	1	
	08/77-07/8270K	Black			
3	928 559 106 05	Water deflector strip	right	1	
	08/77-07/8270K	Black			
3A	928 559 213 03	Sleeve	left	1	
	08/77-07/8270H	Black			
3A	928 559 214 03	Sleeve	right	1	
	08/77-07/8270H	Black			
3A	928 559 213 05	Sleeve	left	1	
	08/77-07/8270K	Black			
3A	928 559 214 05	Sleeve	right	1	
	08/77-07/8270K	Black			
3B	928 559 107 02	Clip		9	
3C	928 559 111 02	end piece	left	1	
3C	928 559 112 02	end piece	right	1	
4	928 559 119 04	roof channel	left	1	
4	928 559 119 04	roof channel	left	1	

Model	Year	MG	SG	Illustration	Restrictions	UPD	7:27	27.10.2023
928	1978	8	10	810-000		738		

Pos	Part Number	Description	Remark	Qty	Model
	08/77-07/82004	roof channel			
4	928 559 120 04	roof channel	right	1	
4	928 559 120 04	roof channel	right	1	
	08/77-07/82004	roof channel 004			
5	928 559 121 03	roof channel	left	1	
5	928 559 122 03	roof channel Cross panel	right	1	
6	900 145 044 07	panel screw 4,2 X 19		2	
7	928 559 151 03	Cover trim Discontinued part		1	
	08/77-07/8270H	Black			
7	928 559 151 04	Cover trim		1	
	08/77-07/8270K	Black			
8	928 559 153 02	Cover trim D >> - MJ 1981 Discontinued part	left	1	
8	928 559 153 04	Cover trim	left	1	
	08/77-07/8270H	Black			
8	928 559 153 06	Cover trim	left	1	
	08/77-07/8270K	Black			
8	928 559 153 03	Cover trim	left	1	
	08/77-07/8270H	Black for vehicles with Rear spoiler			
8	928 559 153 05	Cover trim	left	1	
	08/77-07/8270K	Black for vehicles with Rear spoiler			
8	928 559 154 02	Cover trim D >> - MJ 1981 Discontinued part	right	1	
8	928 559 154 04	Cover trim	right	1	
	08/77-07/8270H	Black			
8	928 559 154 06	Cover trim	right	1	
	08/77-07/8270K	Black			

Model	Year	MG	SG	Illustration	Restrictions	UPD	7:27	27.10.2023
928	1978	8	10	810-000		738		

Pos	Part Number	Description	Remark	Qty	Model
8	928 559 154 03	Cover trim	right	1	
	08/77-07/8270H	Black for vehicles with Rear spoiler			
8	928 559 154 05	Cover trim	right	1	
	08/77-07/8270K	Black for vehicles with Rear spoiler			
9	928 559 155 02	Sleeve Discontinued part		3	
	08/77-07/8270H	Black			
9	928 559 155 03	Sleeve		3	
	08/77-07/8270K	Black			
10	928 559 133 04	Retaining clip		16	
11	928 559 143 02	seal ring Discontinued part		16	
11	928 559 143 03	seal ring		16	
12	900 143 066 07	Screw 7 X 7		16	
13	999 025 083 70	Washer 3,7		16	
14	901 559 210 20	Porsche crest Discontinued part		1	
14	901 559 210 26	Porsche crest		1	
15A	928 559 135 04	Transverse strut Radiator grille		3	
15B	928 559 137 02	web	center	1	
15C	928 559 139 02	web	outer	2	
16	928 559 141 02	Underlay		2	
17	999 921 004 02	fillister hd. bolt M 4 X 15		9	
18	900 151 001 02	Washer A 4,3		9	
19	928 543 419 02	decorative frame D >> - MJ 1981 Discontinued part	left	1	
19	928 543 419 08	decorative frame	left	1	
	08/77-07/8270H	Black			

Model	Year	MG	SG	Illustration	Restrictions	UPD	7:27	27.10.2023
928	1978	8	10	810-000		738		

Pos	Part Number	Description	Remark	Qty	Model
19	928 543 419 08	decorative frame	left	1	
	08/77-07/8270K	Black			
19	928 543 419 03	decorative frame Rear spoiler D >> - MJ 1981 Discontinued part	left	1	
19	928 543 419 07	decorative frame	left	1	
	08/77-07/8270H	Black Rear spoiler			
19	928 543 419 07	decorative frame	left	1	
	08/77-07/8270K	Black Rear spoiler			
19	928 543 420 02	decorative frame D >> - MJ 1981 Discontinued part	right	1	
19	928 543 420 08	decorative frame	right	1	
	08/77-07/8270H	Black			
19	928 543 420 08	decorative frame	right	1	
	08/77-07/8270K	Black			
19	928 543 420 03	decorative frame Rear spoiler D >> - MJ 1981 Discontinued part	right	1	
19	928 543 420 07	decorative frame	right	1	
	08/77-07/8270H	Black Rear spoiler			
19	928 543 420 07	decorative frame	right	1	
	08/77-07/8270K	Black Rear spoiler			
20	928 543 417 02	decorative frame D >> - MJ 1981 Discontinued part	left	1	
20	928 543 417 08	decorative frame	left	1	
	08/77-07/8270H	Black			
20	928 543 417 08	decorative frame	left	1	
	08/77-07/8270K	Black			

Model	Year	MG	SG	Illustration	Restrictions	UPD	7:27	27.10.2023
928	1978	8	10	810-000		738		

Pos	Part Number	Description	Remark	Qty	Model
20	928 543 417 03	decorative frame Rear spoiler D >> - MJ 1981 Discontinued part	left	1	
20	928 543 417 07	decorative frame	left	1	
	08/77-07/8270H	Black Rear spoiler			
20	928 543 417 07	decorative frame	left	1	
	08/77-07/8270K	Black Rear spoiler			
20	928 543 418 02	decorative frame D >> - MJ 1981	right	1	
20	928 543 418 08	decorative frame	right	1	
	08/77-07/8270H	Black			
20	928 543 418 08	decorative frame	right	1	
	08/77-07/8270K	Black			
20	928 543 418 03	decorative frame Rear spoiler D >> - MJ 1981	right	1	
20	928 543 418 07	decorative frame	right	1	
	08/77-07/8270H	Black Rear spoiler			
20	928 543 418 07	decorative frame	right	1	
	08/77-07/8270K	Black Rear spoiler			
21	928 543 413 02	corner part D >> - MJ 1981 Discontinued part		2	
21	928 543 413 04	corner part		2	
	08/77-07/8270H	Black			
21	928 543 413 04	corner part		2	
	08/77-07/8270K	Black			
22	928 543 415 02	corner part F >> 92-BS800 192 F >> 92-BS840 296		2	928 928S
22	928 543 415 05	corner part		2	
	08/77-07/8270H	Black			
22	928 543 415 05	corner part		2	

Model	Year	MG	SG	Illustration	Restrictions	UPD	7:27	27.10.2023
928	1978	8	10	810-000		738		

Pos	Part Number	Description	Remark	Qty	Model
	08/77-07/8270K	Black F 92-BS800 193>> F 92-BS840 297>>			928 928S
23	928 537 311 02	Trim	left	1	
	08/77-07/8270H	Black			
23	928 537 311 04	Trim	left	1	
	08/77-07/8270K	Black			
23	928 537 312 02	Trim	right	1	
	08/77-07/8270H	Black			
23	928 537 312 04	Trim	right	1	
	08/77-07/8270K	Black			
24	928 537 313 02	Trim	left	1	
	08/77-07/8270H	Black			
24	928 537 313 04	Trim	left	1	
	08/77-07/8270K	Black			
24	928 537 314 02	Trim	right	1	
	08/77-07/8270H	Black			
24	928 537 314 04	Trim	right	1	
	08/77-07/8270K	Black			
25	928 537 301 03	Trim	left	1	
	08/77-07/8270H	Black			
25	928 537 301 05	corner section moulding for door window	left	1	
	08/77-07/8270K	Black			
25	928 537 302 03	Trim	right	1	
	08/77-07/8270H	Black			
25	928 537 302 05	corner section moulding for door window	right	1	
	08/77-07/8270K	Black			
25A	928 537 369 03	Underlay	left	1	
(25A)	928 537 370 03	Underlay	right	1	
-	900 143 114 07	oval head panel screw B 3,5 X 9,5		2	

Model	Year	MG	SG	Illustration	Restrictions	UPD	7:27	27.10.2023
928	1978	8	10	810-000		738		

Pos	Part Number	Description	Remark	Qty	Model
27	928 799 551 30	Sill trim strip	left	1	
27	928 551 056 02	Sill trim strip	right	1	
27A	928 551 123 02	Clip		12	
27B	999 591 451 40	Securing clip		12	
27C	999 702 116 40	Grommet		12	
27D	999 591 519 40	Spreader rivet		2	
-		Protective strip			
28	928 559 037 03	Protective strip	left front	1	
28	928 559 038 03	Protective strip Wing	right front	1	
-	928 559 175 03	Adhesive tape Wing		2	
29	928 559 033 03	Protective strip	left	1	
29	928 559 034 03	Protective strip Door	right	1	
-	928 559 965 00	Adhesive tape Door		2	
30	928 559 041 03	Protective strip	left rear	1	
30	928 559 042 03	Protective strip Side part	right rear	1	
-	928 559 181 03	Adhesive tape Side part		2	
31	928 559 281 02	bush		10	
32	928 505 325 04	inscription dark grey		1	
32	928 505 325 03	inscription white		1	
32	928 505 325 05	inscription light grey		1	
33	928 505 335 04	inscription dark grey		1	
33	928 505 335 05	inscription silver		1	
34	928 559 075 02	Stone guard film	left	1	
34	928 559 076 02	Stone guard film	right	1	

Model	Year	MG	SG	Illustration	Restrictions	UPD	7:27	27.10.2023
928	1978	8	10	810-000		738		

Pos	Part Number	Description	Remark	Qty	Model
-	928 537 403 02	Clip push-on connector for Trim		2	
35	928 543 437 02	decorative frame	left	1	
	08/77-07/8270H	Black Rear spoiler			
35	928 543 437 03	decorative frame	left	1	
	08/77-07/8270K	Black Rear spoiler			
35	928 543 438 02	decorative frame	right	1	
	08/77-07/8270H	Black Rear spoiler			
35	928 543 438 03	decorative frame	right	1	
	08/77-07/8270K	Black Rear spoiler			
36	928 543 439 02	Sleeve		2	
	08/77-07/8270H	Black decorative frame Rear spoiler			
36	928 543 439 03	Sleeve		2	
	08/77-07/8270K	Black decorative frame Rear spoiler			
37	928 543 439 04	Sleeve	left	1	
	08/77-07/8270H	Black decorative frame Rear spoiler			
37	928 543 439 04	Sleeve	left	1	
	08/77-07/8270K	Black decorative frame Rear spoiler			
37	928 543 440 04	Sleeve	right	1	
	08/77-07/8270H	Black decorative frame Rear spoiler			
37	928 543 440 04	Sleeve	right	1	
	08/77-07/8270K	Black decorative frame Rear spoiler			

Model	Year	MG	SG	Illustration	Restrictions	UPD	7:27	27.10.2023
928	1978	8	11	811-000		738		

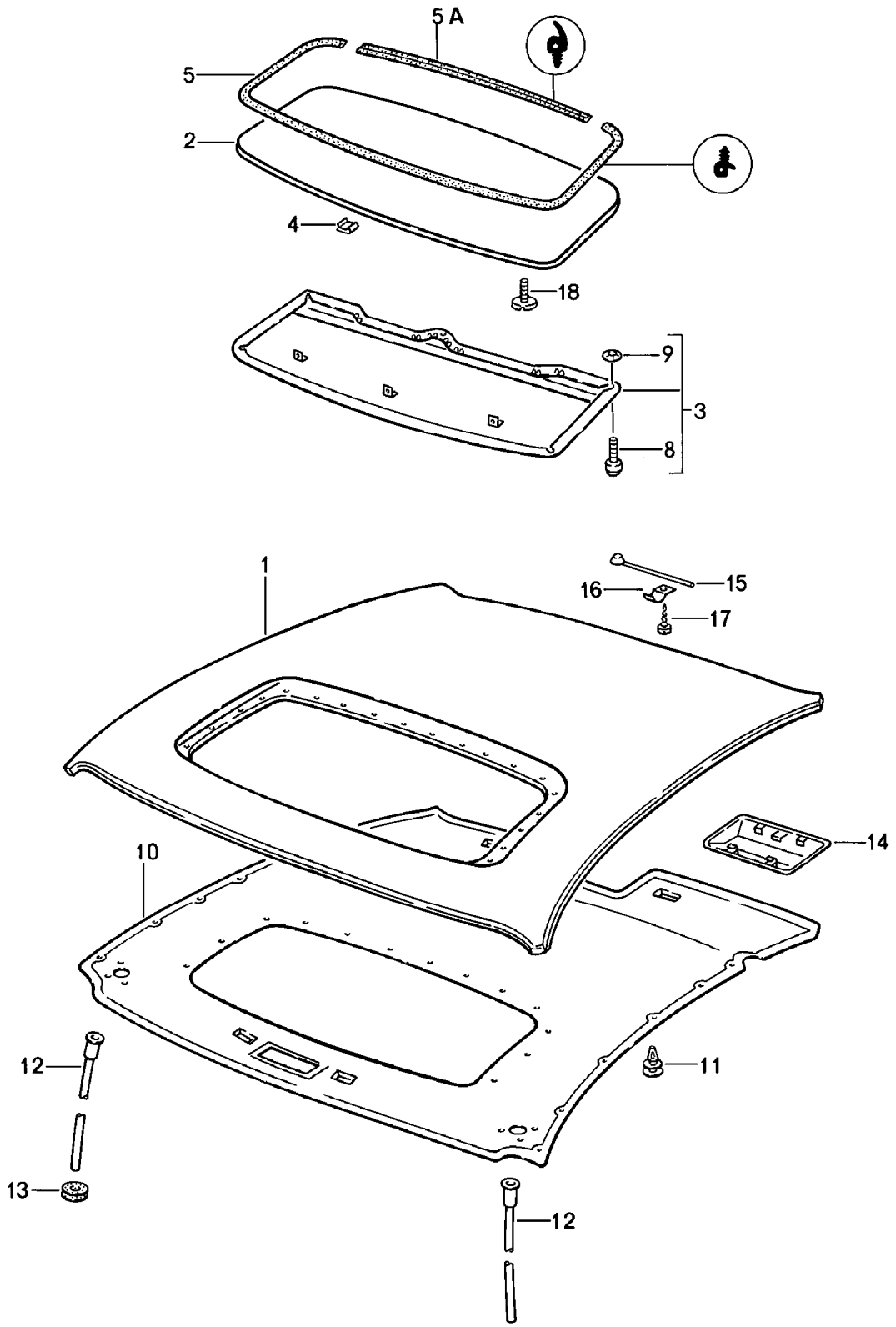

Model	Year	MG	SG	Illustration	Restrictions	UPD	7:27	27.10.2023
928	1978	8	11	811-000		738		

Pos	Part Number	Description	Remark	Qty	Model
		Glass sunroof Electric			
1	928 503 027 60	Roof		1	
1	928 503 027 60	Roof		1	
	08/77-07/82GRV	primed			
2	928 564 033 41	Cover		1	
2	928 564 033 41	Cover		1	
	08/77-07/82GRV	primed			
3	928 564 069 40	roof frame Leatherette		1	
	08/77-07/8240D	Cork			
	08/77-07/8220B	Dark green			
	08/77-07/8221S	brown			
	08/77-07/8205T	Black			
	08/77-07/8230B	blue			
(3)	928 564 069 50	roof frame Leather		1	
	08/77-07/8240D	Cork			
	08/77-07/8220B	Dark green			
	08/77-07/823NG	brown			
	08/77-07/821AJ	Black			
	08/77-07/8230B	blue			
	08/77-07/8260S	Hannibal grey			
	08/77-07/8220S	Mint green			
	08/77-07/822LB	wine red			
4	999 591 898 02	Clip Discontinued part		18	
4	PCG 591 898 02	Clip		18	
4	PCG 591 898 02	Clip		18	
5	928 564 259 02	Seal		1	
5A	928 564 261 02	Seal		1	
8	928 564 399 40	Glide piece		3	
9	999 591 377 02	speed nut		3	

Model	Year	MG	SG	Illustration	Restrictions	UPD	7:27	27.10.2023
928	1978	8	11	811-000		738		

Pos	Part Number	Description	Remark	Qty	Model
10	928 555 071 60	roof trim Leatherette		1	
	08/77-07/8240D	Cork			
	08/77-07/8220B	Dark green			
	08/77-07/8221S	brown			
	08/77-07/8270A	Black			
(10)	928 555 071 63	roof trim Leather		1	
	08/77-07/8240D	Cork			
	08/77-07/8220B	Dark green			
	08/77-07/823NG	brown			
	08/77-07/821AJ	Black			
	08/77-07/822LB	wine red			
11	999 591 559 40	Clip		10	
12	928 564 413 02	Water drainage hose		2	
13	021 119 569 A	Rubber grommet		2	
14	928 555 301 60	Cover Engine Leatherette		1	
	08/77-07/8240D	Cork			
	08/77-07/8220B	Dark green			
	08/77-07/8221S	brown			
	08/77-07/8205T	Black			
(14)	928 555 301 61	Cover Engine Leather		1	
	08/77-07/8240D	Cork			
	08/77-07/8220B	Dark green			
	08/77-07/823NG	brown			
	08/77-07/821AJ	Black			
	08/77-07/822LB	wine red			
15	928 564 081 02	Spring		1	
16	928 564 379 02	clamping piece		1	

Model	Year	MG	SG	Illustration	Restrictions	UPD	7:27	27.10.2023
928	1978	8	11	811-000		738		

Pos	Part Number	Description	Remark	Qty	Model
17	N 013 970 5	oval head panel screw B 4,8 X 9,5		1	
17	N 106 568 02	oval head panel screw B 4,8 X 9,5		1	
18	900 072 003 02	adjusting screw M 5 X 12		2	

Model	Year	MG	SG	Illustration	Restrictions	UPD	7:28	27.10.2023
928	1978	8	11	811-005		738		

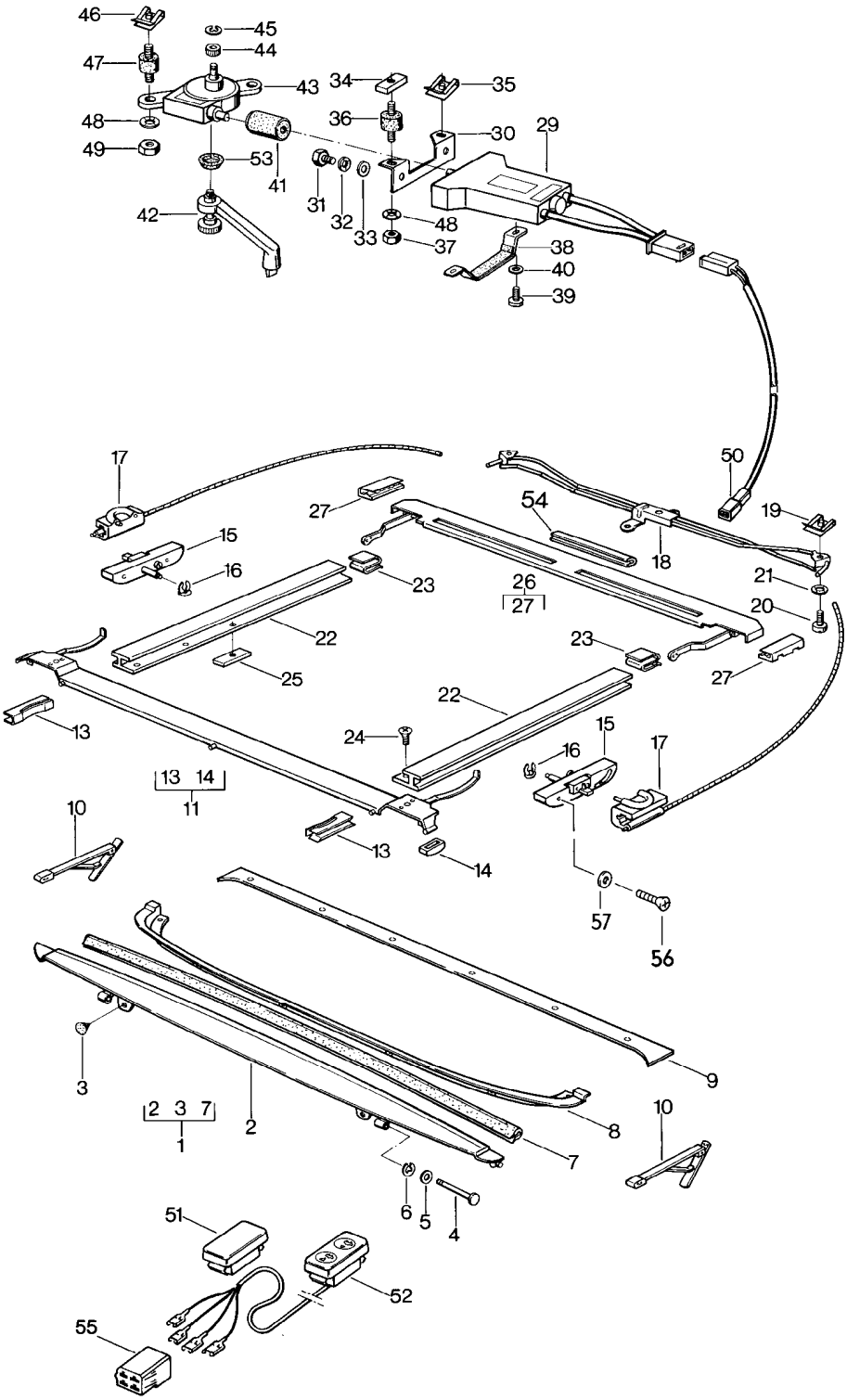

Model	Year	MG	SG	Illustration	Restrictions	UPD	7:28	27.10.2023
928	1978	8	11	811-005		738		

Pos	Part Number	Description	Remark	Qty	Model
		Glass sunroof Individual parts			
1	928 564 013 02	wind deflector		1	
2	928 564 023 02	wind deflector		1	
3	928 564 629 02	Rubber buffer		2	
4	999 088 009 07	Pin		2	
5	900 089 015 07	Washer		2	
6	900 116 001 07	Retaining washer		2	
7	928 564 358 02	Edge protection		1	
8	928 564 341 02	Cover		1	
9	928 564 105 02	Cover trim		1	
10	928 564 057 02	Toggle catch	left	1	
10	928 564 058 02	Toggle catch	right	1	
11	928 564 061 40	Guide		1	
13	928 564 267 02	Glide piece		2	
14	928 564 268 03	sliding shoe		2	
15	928 564 045 40	gate guide Discontinued part	left	1	
(15)	928 564 045 42	gate guide	left	1	
15	928 564 046 40	gate guide Discontinued part	right	1	
(15)	928 564 046 42	gate guide	right	1	
16	999 166 026 07	Safety fuse D >> - MJ 1979		2	
17	928 564 083 43	Guide	left	1	
17	928 564 084 43	Guide	right	1	
18	928 564 209 40	guide tube		1	
19	999 507 248 02	panel nut M 5		2	
20	N 014 133 8	fillister hd. bolt M 5 X 12 Discontinued part		3	
20	N 014 133 I	fillister hd. bolt M 5 X 12		3	

Model	Year	MG	SG	Illustration	Restrictions	UPD	7:28	27.10.2023
928	1978	8	11	811-005		738		

Pos	Part Number	Description	Remark	Qty	Model
21	N 012 005 3	spring ring B 5		2	
22	928 564 015 41	Guide rail D >> - MJ 1980	left	1	
22	928 564 015 41	Guide rail D - MJ 1982>> - MJ 1982	left	1	
22	928 564 016 41	Guide rail D >> - MJ 1980	right	1	
22	928 564 016 41	Guide rail D - MJ 1982>> - MJ 1982	right	1	
23	999 591 448 02	Retaining clip		2	
24	900 269 052 00	countersunk bolt M 4 X 10		6	
25	928 502 617 60	Threaded plate M 4		2	
26	928 564 167 41	Water drain plate D >> - MJ 1979		1	
(26)	928 564 167 41	Water drain plate D - MJ 1980>>		1	
29	928 624 007 00	Electric motor		1	
30	928 624 105 00	Console for engine mounting		1	
31	N 010 208 5	Hexagon bolt M 6 X 8		2	
32	N 012 006 4	spring ring B 6		2	
33	N 011 524 7	Washer A 6,4 Discontinued part		2	
33	N 011 524 27	Washer A 6,4		2	
34	928 502 617 61	Threaded plate M 5		1	
35	999 507 248 02	panel nut M 5		2	
36	999 703 308 00	Bonded rubber bush Discontinued part		2	
36	999 703 308 0A	Bonded rubber bush		2	
37	N 011 005 14	Hexagon nut M 5 Discontinued part		2	

Model	Year	MG	SG	Illustration	Restrictions	UPD	7:28	27.10.2023
928	1978	8	11	811-005		738		

Pos	Part Number	Description	Remark	Qty	Model
37	900 076 091 01	Hexagon nut M 5		2	
38	928 624 011 00	Retaining bar		1	
39	N 013 883 3	panel screw		1	
40	900 025 003 02	Washer		1	
41	911 624 103 00	Coupling Discontinued part		1	
41	911 624 103 01	Coupling		1	
42	901 564 085 05	crank		1	
43	928 564 025 02	Gearbox		1	
44	928 564 125 02	gear		1	
45	900 116 003 01	Retaining washer		1	
46	999 507 248 02	panel nut		2	
47	999 703 306 00	Bonded rubber bush		2	
48	N 012 005 3	spring ring		2	
49	N 011 005 14	Hexagon nut M 5 Discontinued part		2	
49	900 076 091 01	Hexagon nut M 5		2	
50	928 612 006 01	Wire set		1	
51	928 613 123 04	Dummy cover		1	
52	928 613 120 00	Push button		1	
53	901 564 663 05	Cover cap		1	
-	999 911 041 00	Edge protection		*	
54		shorten to:	150 MM	1	
55	928 612 413 03	Connector housing		1	
56	999 217 008 02	Hexagon bolt M 5 X 10		4	
57	900 025 003 02	Washer A 5,3		4	

Model	Year	MG	SG	Illustration	Restrictions	UPD	7:28	27.10.2023
928	1978	8	12	812-000		738		

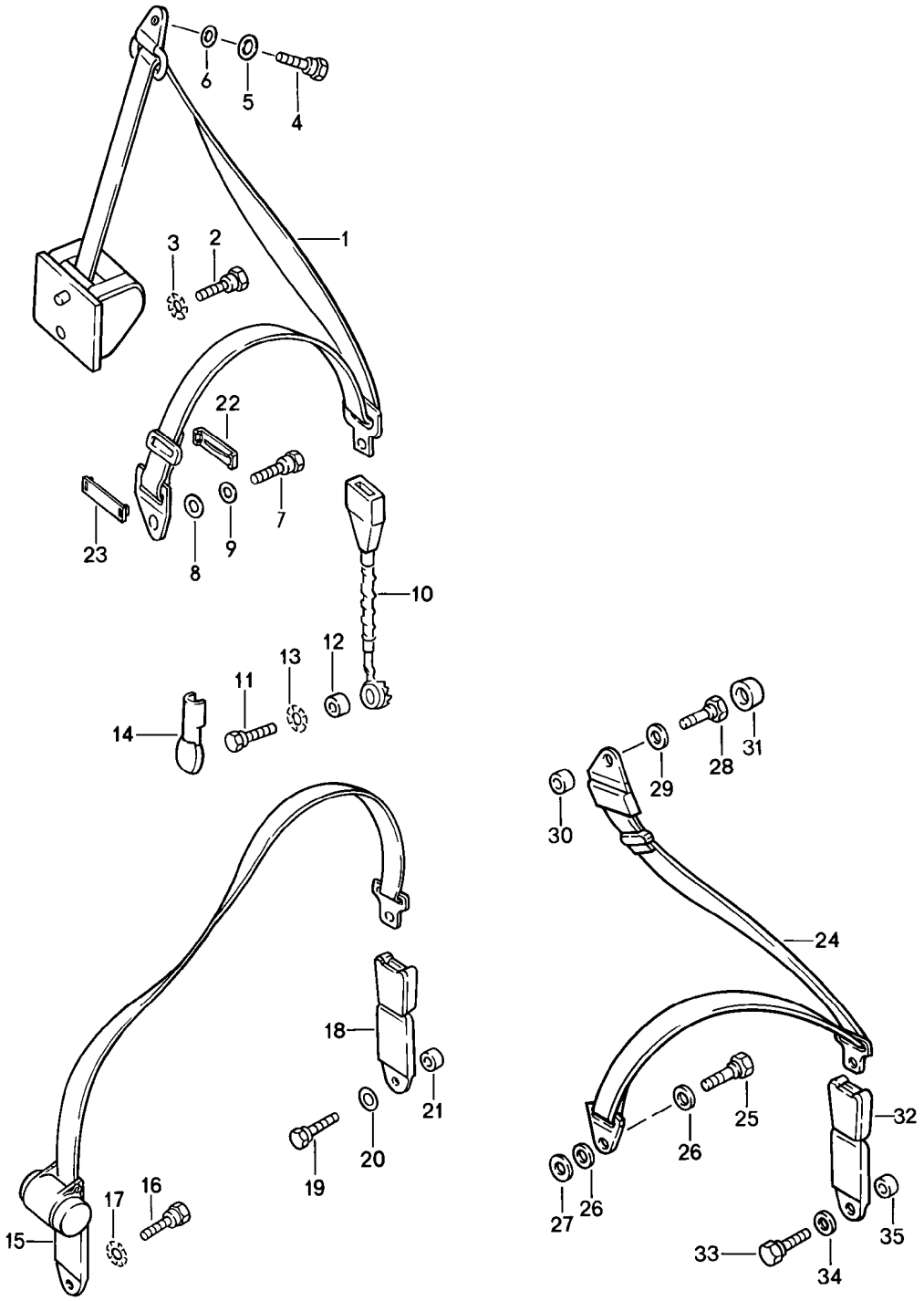

Model	Year	MG	SG	Illustration	Restrictions	UPD	7:28	27.10.2023
928	1978	8	12	812-000		738		

Pos	Part Number	Description	Remark	Qty	Model
		Seat belts	front and rear		
1	928 803 126 02	three-point seat belt with inertia reel for flexible lock 928.803.183.02 928.803.184.02 D >> - MJ 1979		2	
1	928 803 126 09	three-point seat belt with inertia reel D >> - MJ 1979		2	
(1)	928 803 126 09	three-point seat belt with inertia reel D - MJ 1980>> Discontinued part		2	
(1)	928 803 126 09	three-point seat belt with inertia reel D - MJ 1980>>		2	
(1)	928 803 126 04	three-point seat belt with inertia reel Discontinued part		2	
(1)	928 803 126 05	three-point seat belt with inertia reel		2	
(1)	928 803 126 05	three-point seat belt with inertia reel D >> - MJ 1979		2	
(1)	928 803 126 09	three-point seat belt with inertia reel D - MJ 1980>> Discontinued part		2	
(1)	928 803 126 09	three-point seat belt with inertia reel D - MJ 1980>>		2	
2	928 803 121 02	Screw		2	
3	N 012 112 2	Serrated washer J 12,5		2	
4	111 857 793 E	Hexagon bolt		2	
5	N 011 655 2	Washer 11,5		2	
6	211 857 771	Washer		4	
7	901 803 119 22	Hexagon bolt		2	
8	999 025 212 09	Washer 12 Discontinued part		2	

Model	Year	MG	SG	Illustration	Restrictions	UPD	7:28	27.10.2023
928	1978	8	12	812-000		738		

Pos	Part Number	Description	Remark	Qty	Model
8	999 025 212 01	Washer 12		2	
9	211 857 771	Washer		2	
10	928 803 183 02	flexible lock for three-point seat belt with inertia reel 928.803.126.02 D >> - MJ 1979	left	1	
(10)	928 803 184 02	flexible lock for three-point seat belt with inertia reel 928.803.126.02 D >> - MJ 1979	right	1	
(10)	928 803 183 04	flexible lock D >> - MJ 1979	left	1	"GB."
(10)	928 803 183 07	flexible lock D >> - MJ 1979	left	1	"AUS"
(10)	928 803 184 07	flexible lock D >> - MJ 1979	right	1	"AUS"
(10)	928 803 183 05	Belt latch D - MJ 1980>>		2	
11	111 857 799	Hexagon bolt for flexible lock		1	
12	928 803 259 02	spacer bush		2	
13	N 012 112 2	Serrated washer 12,5		2	
14	803 019 845	Cover cap		2	
15	928 803 015 02	Lap belt with belt reel		2	
(15)	928 803 015 04	Lap belt with belt reel		2	"GB."
16	111 857 799 A	Hexagon bolt Discontinued part		2	
16	3B0 857 799	Hexagon bolt		2	
17	N 012 112 2	Serrated washer 12,5		2	
18	928 803 081 02	lock D >> - MJ 1979	left	1	
(18)	928 803 082 02	lock D >> - MJ 1979	right	1	

Model	Year	MG	SG	Illustration	Restrictions	UPD	7:28	27.10.2023
928	1978	8	12	812-000		738		

Pos	Part Number	Description	Remark	Qty	Model
(18)	928 803 051 02	lock D - MJ 1980>>		2	
19	111 857 793 E	Hexagon bolt		2	
20	211 857 771	Washer		4	
21	928 803 259 02	spacer bush		2	
-	928 803 903 02	Lap belt		1	
22	928 803 151 02	clamping piece Upper part		1	
23	928 803 153 02	clamping piece Lower part		1	
24	927 803 021 02	three-point seat belt with inertia reel		2	
25	111 857 793 E	Hexagon bolt		2	"AUS"
26	211 857 771	Washer		4	"AUS"
27	N 011 655 2	Washer		2	"AUS"
28	111 857 793 E	Hexagon bolt		2	"AUS"
29	211 857 771	Washer		2	"AUS"
30	901 803 116 40	spacer bush		2	"AUS"
31	811 857 845	Cover cap		2	"AUS"
32	928 803 051 02	lock		2	"AUS"
(32)	928 803 081 02	lock	left	1	PR:417 "AUS"
(32)	928 803 082 02	lock	right	1	PR:417 "AUS"
33	111 857 793 E	Hexagon bolt		2	"AUS"
34	211 857 771	Washer		2	"AUS"
35	928 803 259 02	spacer bush		2	"AUS"

Model	Year	MG	SG	Illustration	Restrictions	UPD	7:28	27.10.2023
928	1978	8	13	813-000		738		

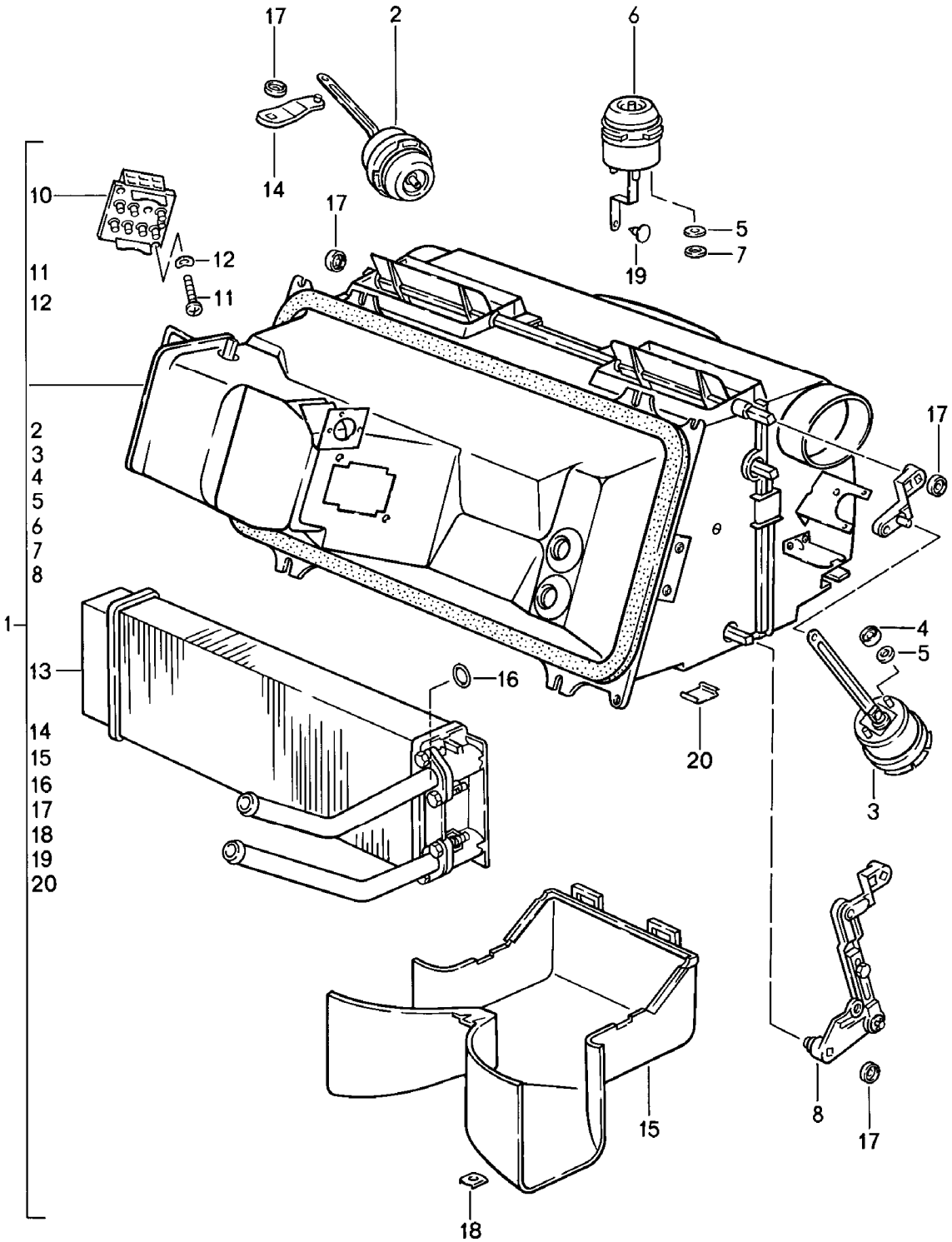

Model	Year	MG	SG	Illustration	Restrictions	UPD	7:28	27.10.2023
928	1978	8	13	813-000		738		

Pos	Part Number	Description	Remark	Qty	Model
		heater unit			
1	928 574 037 02	heater unit D >> - MJ 1979		1	
(1)	928 574 037 03	heater unit D - MJ 1980>>		1	
2	928 574 062 03	Vacuum unit locking flap		1	
3	928 574 077 02	Vacuum unit Defroster flap		1	
4	999 507 243 02	Crown bracing		6	
5	928 574 465 02	Rubber washer		9	
6	928 574 079 02	Vacuum unit Footwell vent		1	
7	999 507 247 02	Securing clip		3	
8	928 574 082 02	relay shaft Control valve		1	
10	928 618 101 01	thermal switch		1	
11	900 146 025 02	Round-head screw M 4 X 18		2	
12	N 012 224 3	Spring washer B 4 Discontinued part		2	
12	N 012 224 C	Spring washer B 4		2	
13	928 574 047 02	heat exchanger	lhd	1	
(13)	927 574 047 02	heat exchanger	rhd	1	
14	928 574 397 02	Adjusting lever		1	
15	928 574 027 02	housing Footwell vent		1	
16	999 701 615 40	O-ring		2	
17	999 591 425 03	Securing clip		6	
18	999 507 244 02	Crown bracing		1	
19	928 574 735 02	Pin		1	
20	928 574 423 02	Clip		8	

Model	Year	MG	SG	Illustration	Restrictions	UPD	7:28	27.10.2023
928	1978	8	13	813-005		738		

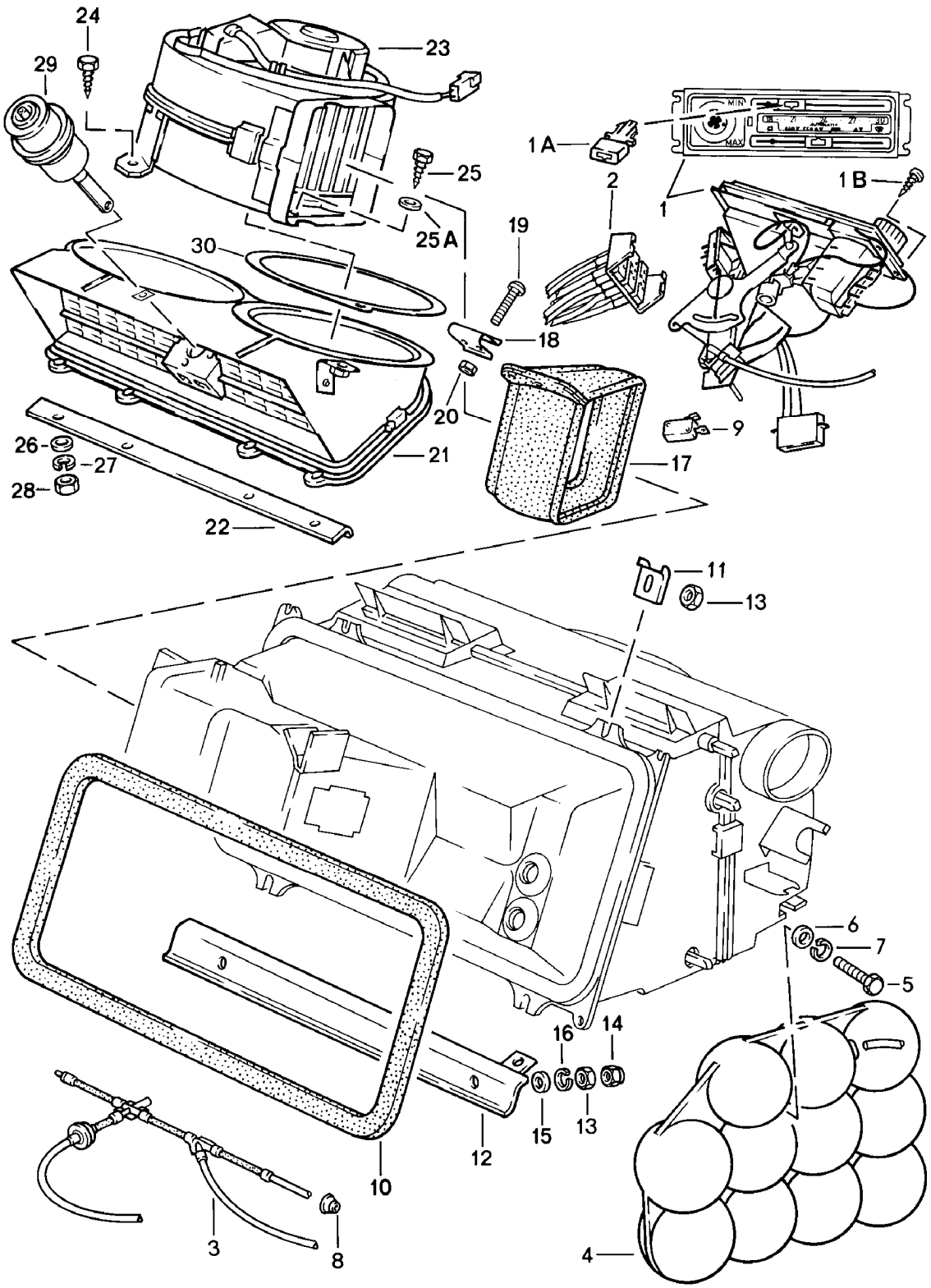

Model	Year	MG	SG	Illustration	Restrictions	UPD	7:28	27.10.2023
928	1978	8	13	813-005		738		

Pos	Part Number	Description	Remark	Qty	Model
		Control switch vacuum hoses Fan			
1	928 574 061 04	Control switch D >> - MJ 1979		1	PR:489
1	928 574 119 02	Control switch D - MJ 1980>>		1	
(1)	928 574 061 05	Control switch D >> - MJ 1979 Discontinued part	english	1	
1	928 574 119 03	Control switch D - MJ 1980>>	english	1	
(1)	928 573 061 04	Control switch Air conditioning D >> - MJ 1979	german	1	
(1)	928 573 119 02	Control switch Air conditioning D - MJ 1980>>	manual german	1	
(1)	928 573 061 05	Control switch Air conditioning D >> - MJ 1979	english	1	
(1)	928 573 119 03	Control switch Air conditioning D - MJ 1980>>	english	1	
(1)	928 573 060 04	Control switch for vehicles with air condit.	Automatic	1	
1A	928 574 093 02	Actuator button Fan motor Rot. knob See main group 9 (Electrics) 9/03/00 - 10 + 12		2	
1B	113 415 869	fillister hd. bolt AM 3,5 X 10		4	
2	928 574 670 02	Vacuum line (complete) D >> - MJ 1979		1	
(2)	928 574 670 03	Vacuum line (complete) D - MJ 1980>>		1	
3	928 574 710 08	Vacuum line		1	
4	171 820 601	vacuum reservoir		1	
5	N 010 221 3	Hexagon bolt M 6 X 35		1	

Model	Year	MG	SG	Illustration	Restrictions	UPD	7:28	27.10.2023
928	1978	8	13	813-005		738		

Pos	Part Number	Description	Remark	Qty	Model
6	N 011 524 7	Washer A 6,4 Discontinued part		1	
6	N 011 524 27	Washer A 6,4		1	
7	N 012 007 2	spring ring A 6,4 Discontinued part		1	
7	900 027 004 03	spring ring A 6,4		1	
8	311 949 149 B	Grommet		1	
9	928 613 128 00	Micro switch		1	
-	928 613 049 00	Micro switch for air conditioner	Automatic	1	
10	928 574 387 02	Seal heater unit		1	
11	928 574 581 02	retaining piece		2	
12	928 556 301 02	Reinforcement		1	
13	900 076 010 02	Nut M 6 Discontinued part		4	
13	900 076 010 0B	Nut M 6		4	
13	900 076 010 03	Nut M 6		4	
14	900 070 002 02	domed cap nut M 6		2	
15	N 011 524 7	Washer A 6,4 Discontinued part		4	
15	N 011 524 27	Washer A 6,4		4	
16	N 012 006 4	spring ring B 6		6	
17	928 574 389 04	Connecting piece D >> - MJ 1980	lhd	1	
(17)	928 574 389 04	Connecting piece D >> - MJ 1980	rhd	1	
17	928 574 389 04	Connecting piece D - MJ 1981>>		1	

Model	Year	MG	SG	Illustration	Restrictions	UPD	7:28	27.10.2023
928	1978	8	13	813-005		738		

Pos	Part Number	Description	Remark	Qty	Model
18	928 574 425 02	Retainer bracket D >> - MJ 1980		1	
19	N 010 264 4	Hexagon bolt M 5 X 25 D >> - MJ 1980		2	
20	N 011 005 14	Hexagon nut M 5 Discontinued part		2	
20	900 076 091 01	Hexagon nut M 5		2	
21	928 574 031 03	Intake housing heater unit D >> - MJ 1979 Discontinued part	lhd	1	
(21)	928 574 031 03	Intake housing heater unit	lhd	1	
(21)	927 574 031 02	Intake housing heater unit	rhd	1	
(21)	928 573 031 05	Intake housing Air conditioning	lhd	1	
(21)	927 573 031 03	Intake housing Air conditioning	rhd	1	
22	928 556 303 02	Reinforcement		1	
23	928 574 033 05	Fan	lhd	1	
23	927 574 033 04	Fan	rhd	1	
24	900 187 104 02	panel screw B 4,8 X 13		2	
25	900 075 265 02	Hexagon bolt 5 X 16 D >> - MJ 1979		2	
(25)	900 187 033 02	panel screw B 4,8 X 50		1	
25A	900 151 002 07	Washer A 5,3		1	
26	N 011 524 7	Washer A 6,4 Discontinued part		4	
26	N 011 524 27	Washer A 6,4		4	
27	N 012 006 4	spring ring B 6		4	

Model	Year	MG	SG	Illustration	Restrictions	UPD	7:28	27.10.2023
928	1978	8	13	813-005		738		

Pos	Part Number	Description	Remark	Qty	Model
28	900 076 010 02	Nut M 6 Discontinued part		4	
28	900 076 010 0B	Nut M 6		4	
28	900 076 010 03	Nut M 6		4	
-	477 819 343	Spring clip		2	
-	928 511 321 02	Cover cap		1	
-	928 574 259 02	Seal		1	
-	999 915 270 40	Seal		*	
-	999 703 058 40	Bungs		2	
-	928 574 459 02	Cable holder		1	
-	928 659 021 01	External temperature sensor Air conditioning D - MJ 1980>>	Automatic	1	
-	928 573 344 02	seal ring		1	
-	928 573 527 02	Connection piece		1	
29	928 573 077 02	Vacuum unit Intake housing		1	PR:573,563
30	928 574 133 02	Seal	lhd	1	
(30)	928 574 133 02	Seal	rhd	1	

Model	Year	MG	SG	Illustration	Restrictions	UPD	7:28	27.10.2023
928	1978	8	13	813-010		738		

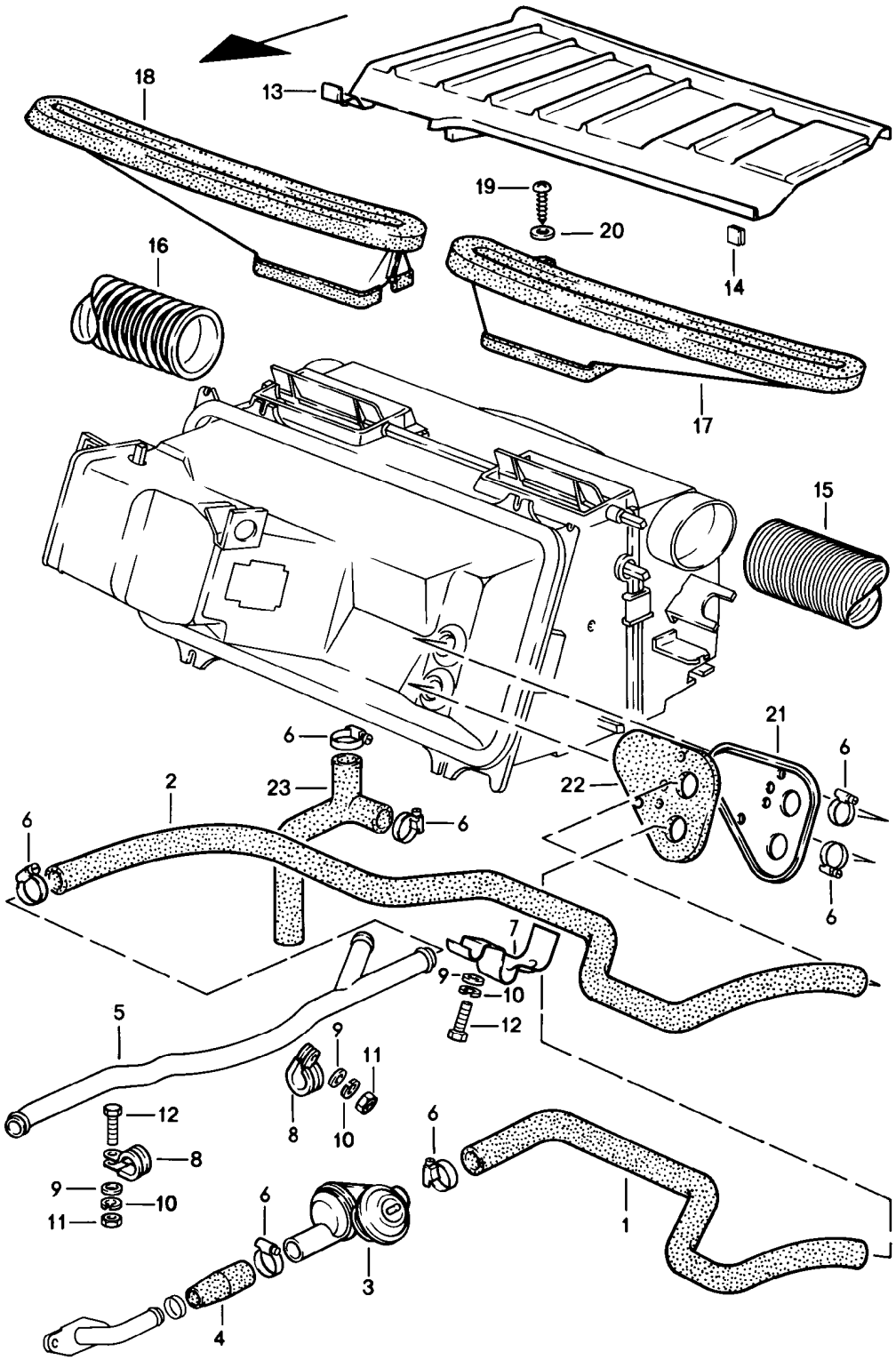

Model	Year	MG	SG	Illustration	Restrictions	UPD	7:28	27.10.2023
928	1978	8	13	813-010		738		

Pos	Part Number	Description	Remark	Qty	Model
		Heating hose jet			
1	928 574 587 03	Heating hose	lhd feed	1	
(1)	927 574 587 03	Heating hose Discontinued part	rhd feed	1	
2	928 574 589 04	Heating hose	lhd return	1	
(2)	927 574 589 03	Heating hose Discontinued part	rhd return	1	
3	928 574 573 03	Valve unit Discontinued part		1	
3	928 574 573 04	Valve unit also use:		1	
-	986 307 507 00	Cover cap		1	
4	928 574 567 02	Connecting hose		1	
5	928 574 106 03	Coolant pipe	lhd	1	
(5)	927 574 106 03	Coolant pipe	rhd	1	
6	999 512 346 00	Hose clamp		6	
7	928 574 605 02	Hose bracket		1	
8	999 511 066 02	Clamp		2	
9	N 011 524 7	Washer A 6,4 Discontinued part		3	
9	N 011 524 27	Washer A 6,4		3	
10	N 012 006 4	spring ring B 6		3	
11	900 076 010 02	Nut M 6 Discontinued part		2	
11	900 076 010 0B	Nut M 6		2	
11	900 076 010 03	Nut M 6		2	
12	900 075 057 02	Hexagon bolt M 6 X 16		2	
12	900 075 057 03	Hexagon bolt M 6 X 16 No longer use the part here		2	

Model	Year	MG	SG	Illustration	Restrictions	UPD	7:28	27.10.2023
928	1978	8	13	813-010		738		

Pos	Part Number	Description	Remark	Qty	Model
13	928 574 553 04	Cover for Scuttle		1	
(13)	927 574 553 04	Cover for Scuttle		1	
14	999 920 005 02	U-clip		4	
14	999 920 005 01	U-clip		4	
15	928 574 625 02	Flex hose	left	1	
16	928 574 626 02	Flex hose	right	1	
17	928 574 631 02	Defroster nozzle for wind-screen	left	1	
18	928 574 632 02	Defroster nozzle for wind-screen	right	1	
19	900 143 031 02	oval head panel screw B 4,2 X 9,5		4	
20	N 011 522 14	Washer A 4,3		4	
21	928 574 055 02	Cover	lhd	1	
21	928 574 055 02	Cover	lhd	1	
	08/77-07/82GRV	primed			
(21)	927 574 055 02	Cover	rhd	1	
21	928 573 065 02	Seal	lhd	1	PR:573,563
21	927 573 065 02	Seal	rhd	1	PR:573,563
22	928 574 585 02	Cover plate		1	
22	928 573 551 02	Cover plate		1	PR:573,563
23	928 574 583 04	Water drainage hose		1	

Model	Year	MG	SG	Illustration	Restrictions	UPD	7:29	27.10.2023
928	1978	8	13	813-015		738		

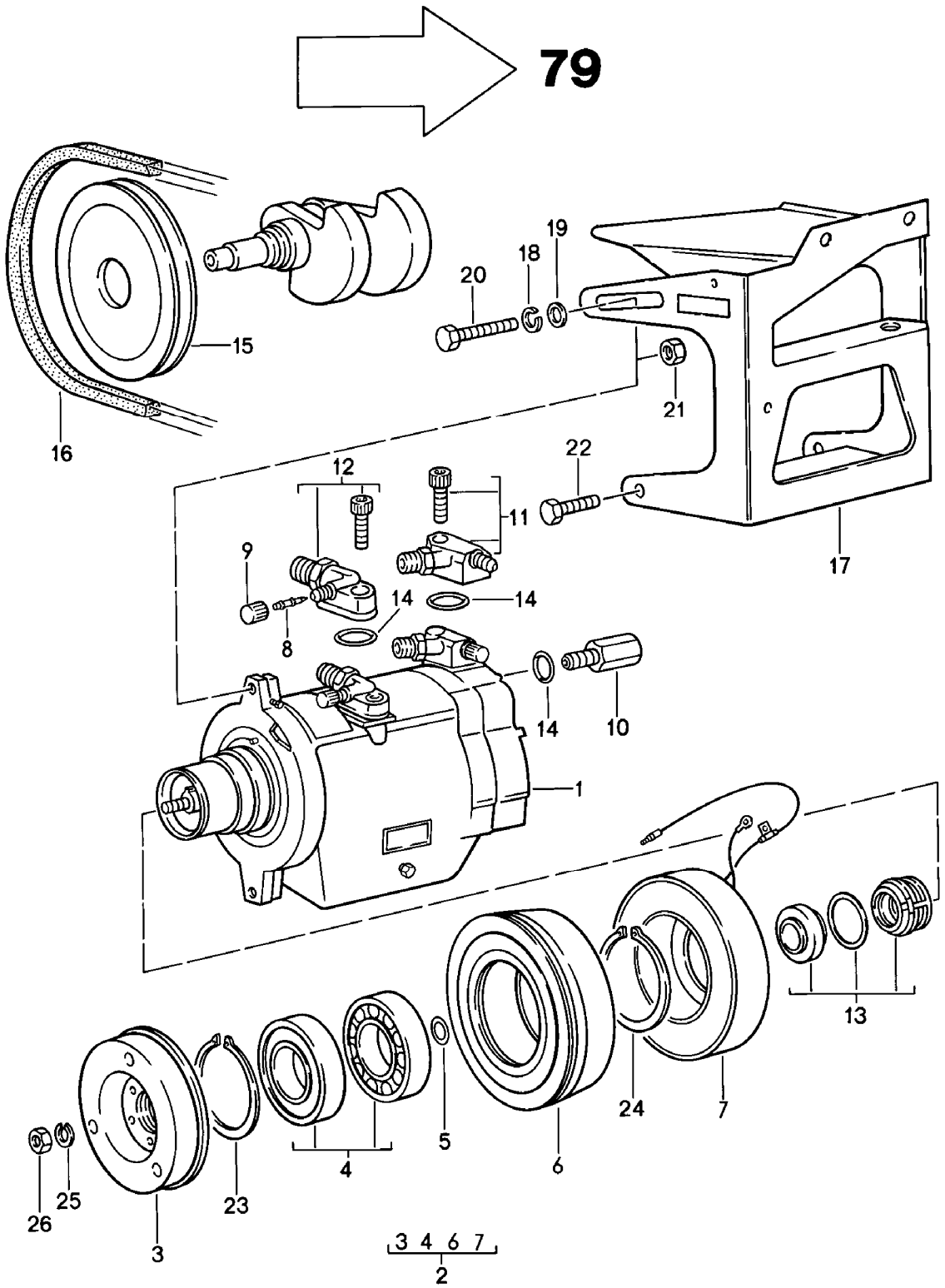

Model	Year	MG	SG	Illustration	Restrictions	UPD	7:29	27.10.2023
928	1978	8	13	813-015		738		

Pos	Part Number	Description	Remark	Qty	Model
		Compressor D >> - MJ 1979			
-		F >> 92-A0800 356			928
(1)	928 126 010 01	Compressor with: Magnetic coupling		1	
2	928 573 902 02	Magnetic coupling (complete)		1	
3	928 573 903 02	Clutch plate		1	
4	928 573 904 02	Mounting	2 parts	1	
5	928 573 905 02	compensation washer		1	
6	928 573 906 02	pulley		1	
7	928 573 907 02	housing with field coil		1	
8	928 573 908 03	Valve insert		1	
9	928 573 909 02	Cap closure		1	
10	928 573 910 02	Pressure-relief valve		1	
11	928 573 911 02	Pressure valve		1	
12	928 573 912 02	Suction valve		1	
13	928 573 913 02	Repair kit for shaft oil seal		1	
14	928 573 914 02	Gasket set (complete)		1	
15	928 102 115 00	v-belt pulley M >> 818 1765 M >> 818 9378	 AUT.	1	
15	928 102 118 00	v-belt pulley M 818 1766 >> M 818 9379 >>	 AUT.	1	
16	999 192 146 50	v-belt 12,5 X 1075 M 818 1766 >> M 818 9379 >>	 AUT.	1	
16	999 192 127 50	v-belt 12,5 X 1022 M >> 818 1765 M >> 818 9378	 AUT.	1	
17	928 126 017 00	Bracket for compressor		1	
18	N 012 242 3	Spring washer B 10		3	

Model	Year	MG	SG	Illustration	Restrictions	UPD	7:29	27.10.2023
928	1978	8	13	813-015		738		

Pos	Part Number	Description	Remark	Qty	Model
19	900 025 008 02	Washer 10,5 Discontinued part		1	
19	N 011 527 4	Washer 10,5 Discontinued part		1	
19	900 025 008 09	Washer 10,5 Discontinued part		1	
19	900 025 008 04	Washer 10,5		1	
19	900 025 008 0E	Washer 10,5	yellow	1	
20	N 040 249 2	Hexagon bolt M 10 X 40		1	
21	N 011 010 6	Hexagon nut M 10 Discontinued part		1	
21	N 101 552 10	Hexagon nut M 10		1	
22	900 075 041 02	Hexagon bolt M 10 X 25		2	
23	999 152 090 00	Securing ring 41$		1	
24	999 152 091 00	Securing ring		1	
-	928 126 123 03	Brace		1	
25	900 027 015 02	spring ring A 8		1	
25	900 027 015 03	spring ring A 8		1	
26	900 076 025 02	Hexagon nut M 8 Discontinued part		1	
26	900 076 064 02	Hexagon nut M 8		1	
-	928 126 125 00	Follower		1	
-	900 075 311 02	Screw M 8 X 85		1	
-	900 082 087 02	Screw M 10 X 45		1	

Model	Year	MG	SG	Illustration	Restrictions	UPD	7:29	27.10.2023
928	1978	8	13	813-019		738		

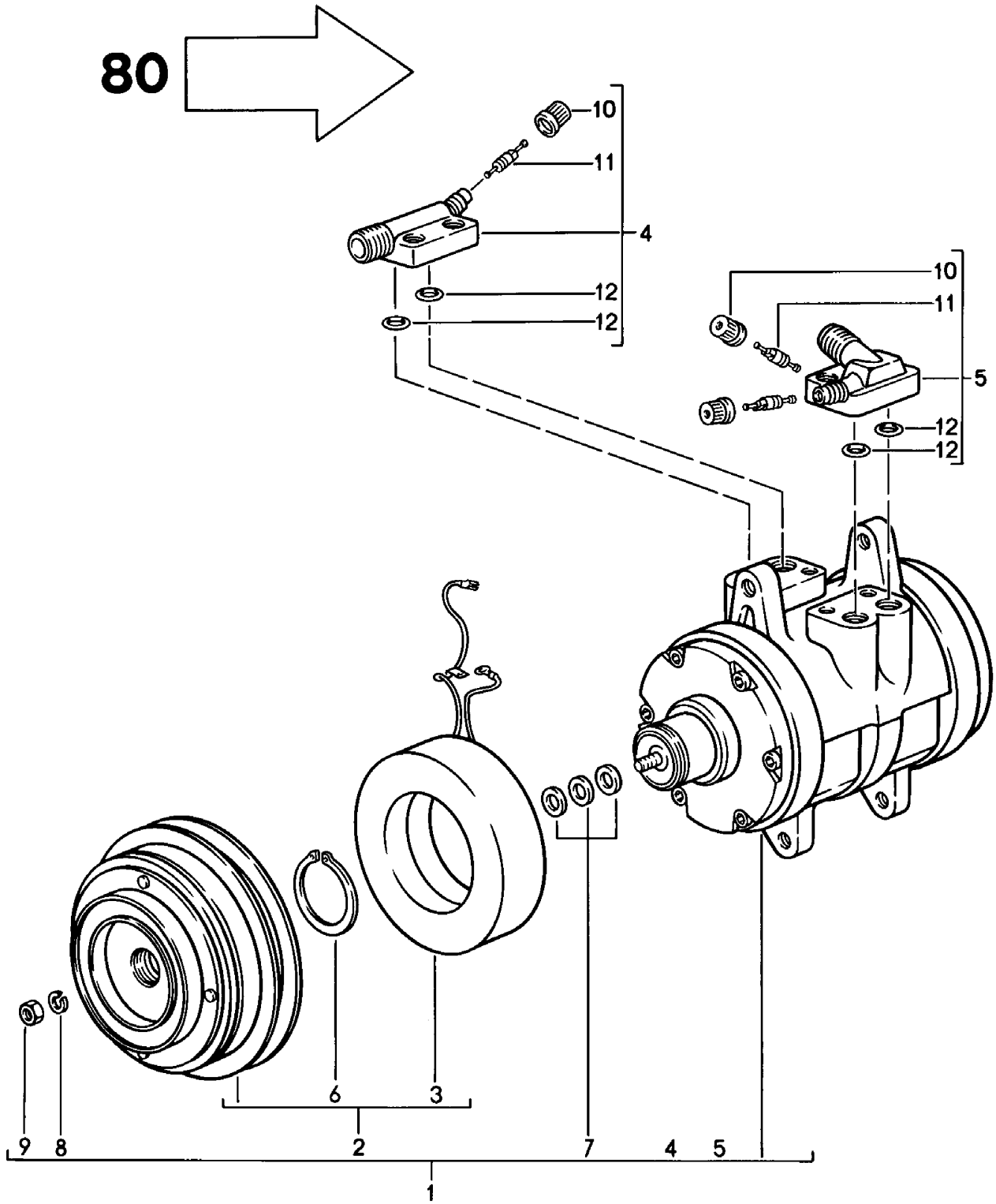

Model	Year	MG	SG	Illustration	Restrictions	UPD	7:29	27.10.2023
928	1978	8	13	813-019		738		

Pos	Part Number	Description	Remark	Qty	Model
		Compressor D - MJ 1980>>			
-		F 92-A0800 357>>			928
1	928 126 010 06	Compressor		1	
(1)	928 126 010 71	Compressor See technical information See main group 8 NR. 42/17 also use:		1	
-	928 573 098 10	Hose		1	
2	928 126 901 00	Coupling		1	
3	928 126 925 00	Magnetic coupling		1	
4	928 126 904 00	Pressure valve		1	
5	928 126 903 00	Suction valve		1	
6	477 298 843	Securing ring		1	
7	477 298 829	Shim 0,1 MM		X	
(7)	477 298 829 A	Shim 0,2 MM		X	
(7)	477 298 829 B	Shim 0,5 MM		X	
(7)	477 298 829 C	Shim 0,8 MM		X	
(7)	477 298 829 D	Shim 1,0 MM		X	
8	900 027 015 02	spring ring B 8		1	
8	900 027 015 03	spring ring B 8		1	
9	N 011 008 8	Hexagon nut M 8		1	
10	928 573 909 02	Cap closure		2	
11	928 573 908 03	Valve insert		2	
12	944 126 935 01	O-ring		4	

Model	Year	MG	SG	Illustration	Restrictions	UPD	7:29	27.10.2023
928	1978	8	13	813-020		738		

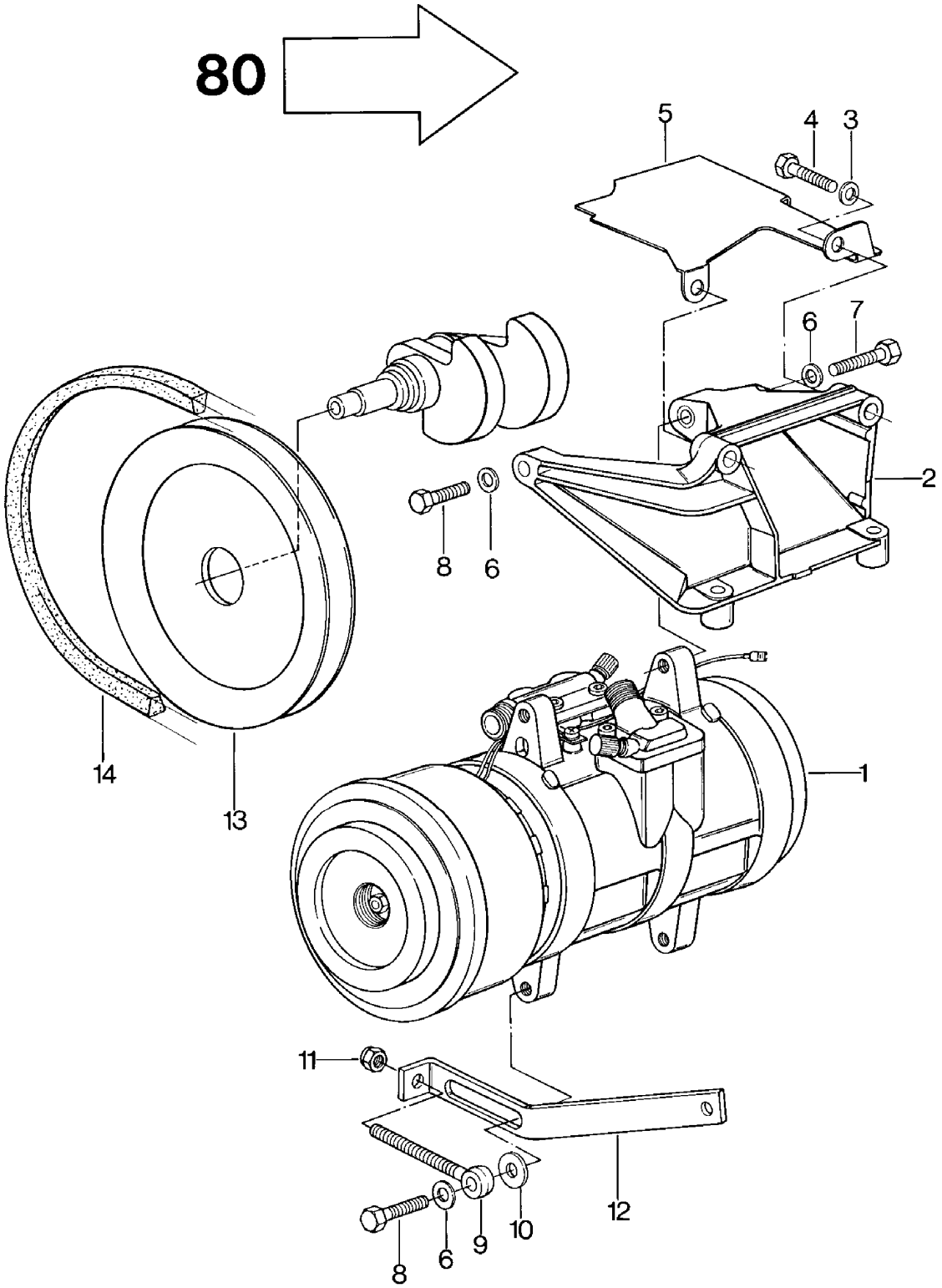

Model	Year	MG	SG	Illustration	Restrictions	UPD	7:29	27.10.2023
928	1978	8	13	813-020		738		

Pos	Part Number	Description	Remark	Qty	Model
		for M 573 UND 563 Compressor			
-		F 92-A0800 357>>			
1		See main group 8 8/13/19			
2	928 126 017 02	Bracket for compressor		1	
3	N 012 241 8	Spring washer		5	
4	N 010 340 4	Hexagon bolt M 8 X 40		4	
5	928 126 116 02	Guard plate		1	
6	N 012 242 3	Spring washer B 10		3	
7	900 083 048 02	Hexagon bolt M 10 X 40		1	
8	900 083 057 02	Hexagon bolt M 10 X 33		2	
9	999 460 003 02	eye bolt		1	
10	928 101 303 00	Washer D >> - MJ 1980		1	
10	928 101 303 00	Washer D - MJ 1981>>		1	
11	900 910 024 02	Locknut M 8		1	
12	928 126 123 03	Brace Discontinued part		1	
12	928 126 123 03	Brace		1	
13	928 102 118 03	v-belt pulley		1	
14	999 192 305 50	v-belt 12,5 X 1125		1	

Model	Year	MG	SG	Illustration	Restrictions	UPD	7:29	27.10.2023
928	1978	8	13	813-025		738		

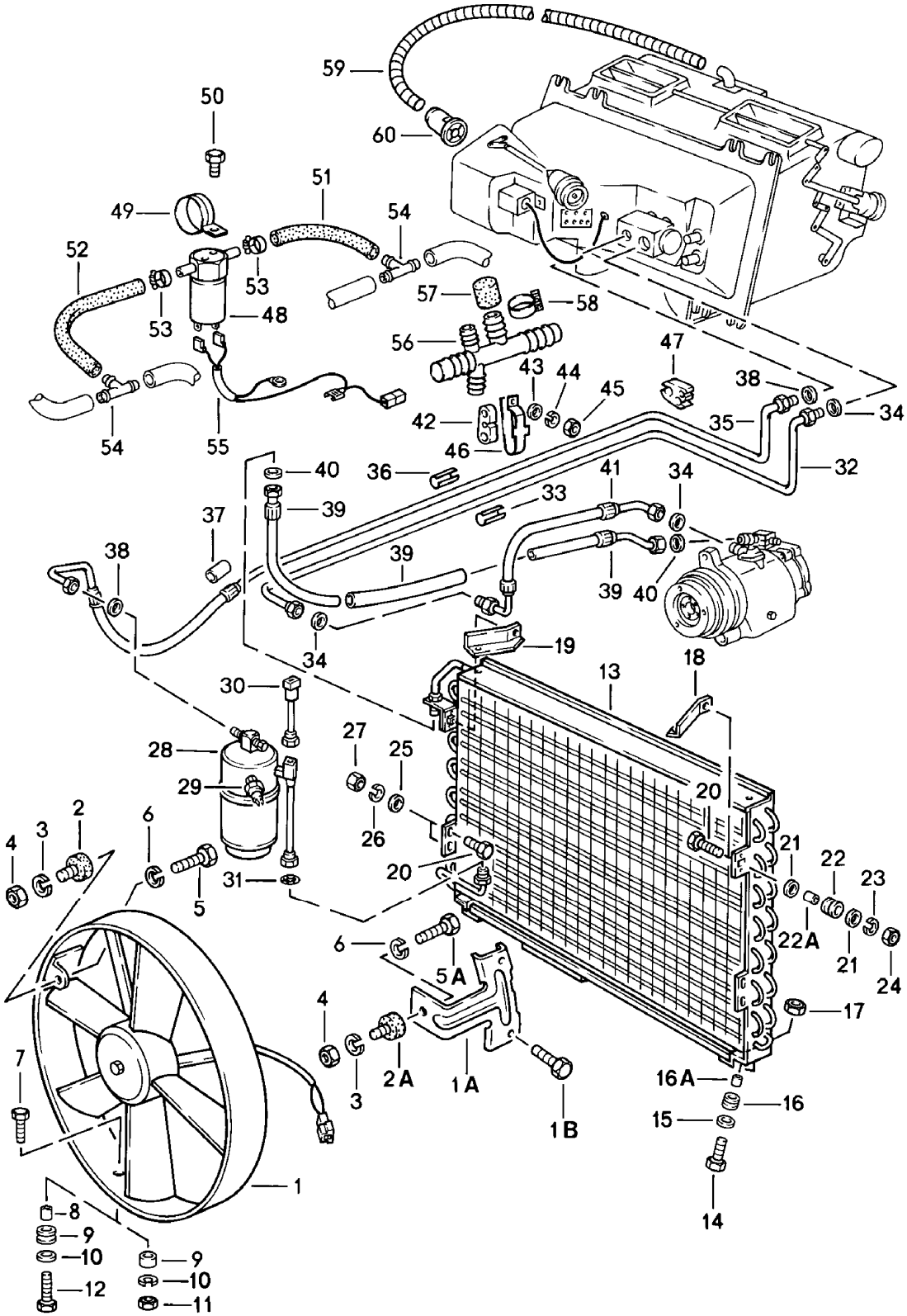

Model	Year	MG	SG	Illustration	Restrictions	UPD	7:30	27.10.2023
928	1978	8	13	813-025		738		

Pos	Part Number	Description	Remark	Qty	Model
		for M 573 Pressure line suction line Fan			
1	928 624 103 00	Fan D >> - MJ 1979		1	
(1)	928 624 103 01	Fan D - MJ 1980>>		1	
1A	928 573 345 02	Bracket for Fan D - MJ 1980>>		2	
1B	999 217 023 02	Hexagon bolt M 5 X 12 D - MJ 1980>>		2	
-	999 513 002 40	Cable ties Discontinued part		2	
-	N 020 910 4	Cable ties Discontinued part		2	
-	999 513 003 40	Cable ties		2	
2	999 703 305 00	Stop buffer D >> - MJ 1979		2	
2A	999 703 310 00	Rubber buffer D - MJ 1980>>		2	
3	N 012 006 4	spring ring B 6		2	
4	900 076 010 02	Nut M 6 Discontinued part		2	
4	900 076 010 0B	Nut M 6		2	
4	900 076 010 03	Nut M 6		2	
5	N 010 211 4	Hexagon bolt M 6 X 12 D >> - MJ 1979		2	
5A	999 217 021 02	Hexagon bolt M 6 X 8 D - MJ 1980>>		2	
6	N 012 006 4	spring ring B 6		2	

Model	Year	MG	SG	Illustration	Restrictions	UPD	7:30	27.10.2023
928	1978	8	13	813-025		738		

Pos	Part Number	Description	Remark	Qty	Model
7	900 075 017 02	Hexagon bolt M 6 X 25 D >> - MJ 1979		1	
7	900 075 017 03	Hexagon bolt M 6 X 25		1	
8	928 573 347 02	Spacer pipe D - MJ 1980>>		1	
9	911 511 332 00	Shim D >> - MJ 1979		1	
(9)	999 702 125 50	Rubber grommet D - MJ 1980>>		1	
10	N 011 524 7	Washer A 6,4 D >> - MJ 1979 Discontinued part		1	
10	N 011 524 27	Washer A 6,4		1	
(10)	900 151 002 07	Washer 5,3 D - MJ 1980>>		1	
11	900 910 011 02	Locknut M 6 D >> - MJ 1979		1	
12	999 217 024 02	Hexagon bolt M 5 X 16 D - MJ 1980>>		1	
13	928 573 143 03	Condenser		1	
14	900 075 057 02	Hexagon bolt M 6 X 16 D >> - MJ 1979		2	
14	900 075 057 03	Hexagon bolt M 6 X 16 No longer use the part here		2	
14	999 217 025 02	Hexagon bolt M 6 X 20 D - MJ 1980>>		2	
15	N 011 524 7	Washer A 6,4 D >> - MJ 1979 Discontinued part		2	
15	N 011 524 27	Washer A 6,4		2	

Model	Year	MG	SG	Illustration	Restrictions	UPD	7:30	27.10.2023
928	1978	8	13	813-025		738		

Pos	Part Number	Description	Remark	Qty	Model
15	900 151 003 02	Washer A 6,4 D - MJ 1980>> Discontinued part		2	
15	900 151 006 03	Washer A 6,4 D - MJ 1980>>		2	
16	999 702 046 50	Cable support sleeve		2	
16A	928 573 347 02	Spacer pipe D - MJ 1980>>		2	
17	900 910 011 02	Locknut M 6		2	
18	928 573 089 02	Retaining bracket	left	1	
19	928 573 090 02	Retaining bracket	right	1	
20	900 075 017 02	Hexagon bolt M 6 X 25 D >> - MJ 1979		2	
20	900 075 017 03	Hexagon bolt M 6 X 25		2	
20	999 217 022 02	Hexagon bolt M 6 X 16 D - MJ 1980>>		4	
21	N 011 524 7	Washer A 6,4 Discontinued part		4	
21	N 011 524 27	Washer A 6,4		4	
22	111 955 641	Rubber grommet D >> - MJ 1979		2	
(22)	999 702 046 50	Cable support sleeve D - MJ 1980>>		2	
22A	928 573 347 02	Spacer pipe D - MJ 1980>>		2	
23	N 012 006 4	spring ring A 6		X 2	
24	900 076 010 02	Nut M 6 Discontinued part		2	
24	900 076 010 0B	Nut M 6		2	
24	900 076 010 03	Nut M 6		2	

Model	Year	MG	SG	Illustration	Restrictions	UPD	7:30	27.10.2023
928	1978	8	13	813-025		738		

Pos	Part Number	Description	Remark	Qty	Model
25	N 011 524 7	Washer A 6,4 Discontinued part		4	
25	N 011 524 27	Washer A 6,4		4	
26	N 012 006 4	spring ring B 6		4	
27	900 076 010 02	Nut M 6 Discontinued part		4	
27	900 076 010 0B	Nut M 6		4	
27	900 076 010 03	Nut M 6		4	
28	928 573 941 03	Drier		1	
29	959 613 137 00	Low-pressure switch		1	
30	928 613 131 01	Temperature regulator D >> - MJ 1979		1	
30	928 613 131 01	Temperature regulator D - MJ 1980>>		1	
31	999 701 619 40	O-ring		1	
32	928 573 091 03	suction line NW 13	lhd	1	
(32)	927 573 091 04	suction line NW 13	rhd	1	
33	928 573 573 02	suction line suction line NW 13		2	
34	999 707 251 40	O-ring 14,0 X 1,8		1	
35	928 573 093 03	Pressure line NW 8	lhd	1	
(35)	927 573 093 02	Pressure line NW 8 D >> - MJ 1979	rhd	1	
(35)	927 573 093 04	Pressure line NW 8 D - MJ 1980>>	rhd	1	
36	928 573 571 02	Pressure line Pressure line NW 8		1	
37	928 573 615 02	Hose		1	

Model	Year	MG	SG	Illustration	Restrictions	UPD	7:30	27.10.2023
928	1978	8	13	813-025		738		

Pos	Part Number	Description	Remark	Qty	Model
38	999 707 247 40	O-ring 7,5 X 1,8		2	
39	928 573 397 02	Hose NW 10 D >> - MJ 1979		1	
39	928 573 097 04	Hose NW 10 D - MJ 1980>>		1	
40	999 707 250 40	O-ring 10,6 X 1,8 Discontinued part		2	
40	999 707 434 41	O-ring 10,6 X 1,8		2	
41	928 573 098 02	Hose NW 13 D >> - MJ 1979		1	
(41)	928 573 098 03	Hose NW 13 D - MJ 1980>>		1	
(41)	928 573 098 10	Hose for Compressor 92812601071 D - MJ 1980>>		1	
42	928 573 645 03	Distance piece	rubber lhd	1	
(42)	927 573 645 03	Distance piece	rubber rhd	1	
43	N 011 524 7	Washer A 6,4 Discontinued part		2	
43	N 011 524 27	Washer A 6,4		2	
44	N 012 006 4	spring ring B 6		1	
45	900 076 010 02	Nut M 6 Discontinued part		1	
45	900 076 010 0B	Nut M 6		1	
45	900 076 010 03	Nut M 6		1	
46	928 574 603 04	Clamp		1	
47	928 573 575 02	clamping piece		1	

Model	Year	MG	SG	Illustration	Restrictions	UPD	7:30	27.10.2023
928	1978	8	13	813-025		738		

Pos	Part Number	Description	Remark	Qty	Model
-	928 574 679 02	4 way connector		2	
48	928 606 215 01	Valve	electric	1	
49	999 511 124 02	Clamp		1	
49	999 511 124 01	Clamp		1	
50	999 072 005 09	Hexagon nut M 6 X 12 Discontinued part		1	
50	999 072 005 01	Hexagon bolt M 6 X 12		1	
-	999 239 008 40	Hose 9,5 X 15,5		*	
51		shorten to:	150 MM	1	
52		shorten to:	290 MM	1	
53	N 023 570 2	Hose clamp		2	
54	999 137 014 40	t-piece		2	
55	928 612 181 00	Wire set		1	
56	928 110 439 00	Distributor D >> - MJ 1979		1	
57	930 110 256 00	Sealing cap D >> - MJ 1979		1	
58	999 512 056 02	Hose clamp D >> - MJ 1979		1	
59	999 181 188 30	Hose 24,5	inner	*	
(59)	928 573 357 02	Hose 850 MM		1	
60	928 573 355 02	connection piece	Inlet	1	

Model	Year	MG	SG	Illustration	Restrictions	UPD	7:30	27.10.2023
928	1978	8	13	813-030		738		

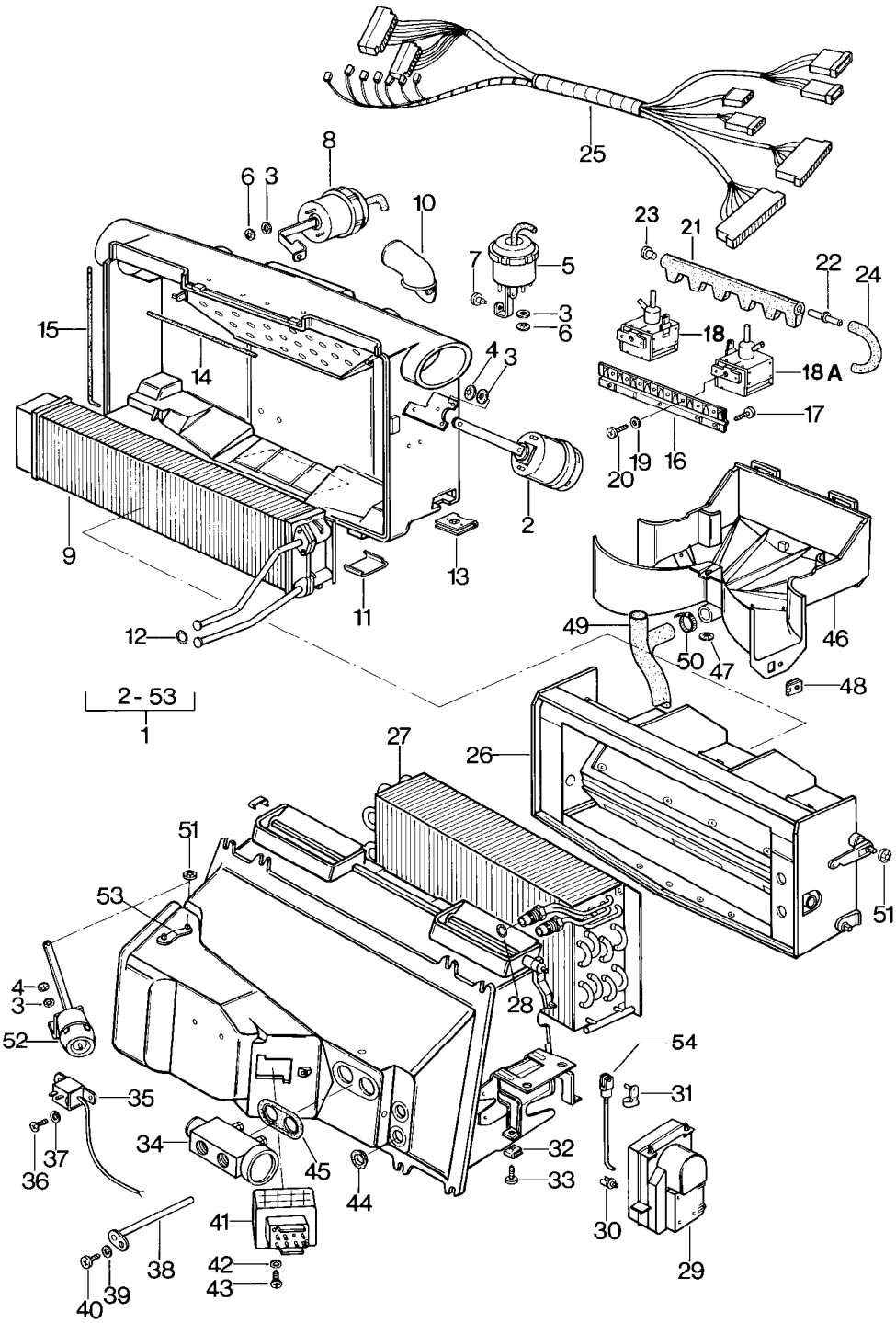

Model	Year	MG	SG	Illustration	Restrictions	UPD	7:30	27.10.2023
928	1978	8	13	813-030		738		

Pos	Part Number	Description	Remark	Qty	Model
		Air distribution housing M 573 M 563			
1	928 573 037 02	Air distribution housing D >> - MJ 1979	lhd	1	
(1)	927 573 037 02	Air distribution housing D >> - MJ 1979	rhd	1	
(1)	928 573 037 03	Air distribution housing D - MJ 1980>>	lhd	1	
(1)	927 573 037 03	Air distribution housing D - MJ 1980>>	rhd	1	
(1)	928 573 036 02	Air distribution housing D - MJ 1980>>	lhd Automatic	1	PR:563
(1)	927 573 036 02	Air distribution housing D - MJ 1980>>	rhd Automatic	1	PR:563
2	928 574 077 02	Vacuum unit Defroster flap		1	
3	928 574 465 02	Rubber washer		9	
4	999 507 243 02	Crown bracing		6	
5	928 574 079 02	Vacuum unit Footwell vent D >> - MJ 1979		1	
(5)	928 574 079 06	Vacuum unit Footwell vent D - MJ 1980>>		1	
6	999 507 247 02	Securing clip		6	
7	928 574 735 02	Pin D - MJ 1980>>		1	
8	928 573 309 03	Vacuum unit Vent D - MJ 1980>>	center	1	
9	928 574 047 02	heat exchanger	lhd	1	
(9)	927 574 047 02	heat exchanger	rhd	1	
10	928 573 356 02	connection piece D >> - MJ 1979	Outlet lhd	1	
(10)	927 573 356 02	connection piece D >> - MJ 1979	Outlet rhd	1	
11	928 574 423 02	Clip		8	
12	999 701 615 40	O-ring		2	
13	999 591 368 02	panel nut 4,2		2	

Model	Year	MG	SG	Illustration	Restrictions	UPD	7:30	27.10.2023
928	1978	8	13	813-030		738		

Pos	Part Number	Description	Remark	Qty	Model
-	999 911 214 50	sealing cord		*	
14		shorten to:	152 MM	1	
15		shorten to:	800 MM	1	
16	928 573 693 02	Bracket D - MJ 1980>>		1	
17	N 013 965 9	oval head panel screw B 4,2 X 9,5 D - MJ 1980>>		2	
18	928 573 691 02	Solenoid valve D - MJ 1980>>	lhd	2	PR:563
18	928 573 691 02	Solenoid valve D - MJ 1980>>	rhd	6	PR:563
(18A)	928 573 692 02	Change-over valve Black D - MJ 1980>>	lhd	4	PR:563
18A	928 573 692 02	Change-over valve Black		1	PR:573
19	900 025 001 02	Washer A 3,2 D - MJ 1980>>		6	
20	N 013 932 1	oval head panel screw B 2,9 X 6,5 D - MJ 1980>>		6	
21	928 573 695 02	Junction D - MJ 1980>>		1	
22	928 574 689 02	Connecting piece D - MJ 1980>>		4	
23	928 574 721 02	Sealing cap D - MJ 1980>>		2	
24	928 574 717 02	Molded hose D - MJ 1980>>		6	
25	928 612 921 01	Wire set D - MJ 1980>>		1	
26	928 573 038 02	flap box D >> - MJ 1979	lhd	1	
(26)	927 573 038 02	flap box D >> - MJ 1979	rhd	1	
(26)	928 573 038 03	flap box D - MJ 1980>>	lhd	1	
(26)	927 573 038 03	flap box D - MJ 1980>>	rhd	1	

Model	Year	MG	SG	Illustration	Restrictions	UPD	7:30	27.10.2023
928	1978	8	13	813-030		738		

Pos	Part Number	Description	Remark	Qty	Model
27	928 573 013 02	evaporator	lhd	1	
(27)	927 573 013 02	evaporator	rhd	1	
28	999 701 620 40	O-ring		2	
29	928 573 150 03	Control and regulating unit		1	PR:563
30	993 531 563 00	Clip D - MJ 1980>>		1	PR:563
31	999 166 050 02	Pin D - MJ 1980>>		1	PR:563
32	999 507 037 02	Speed nut 4,2 D - MJ 1980>>		2	
33	900 143 121 07	panel screw B 4,2 X 16 D - MJ 1980>> Discontinued part		2	
33	900 143 121 0H	panel screw B 4,2 X 16 D - MJ 1980>>		2	
34	928 573 123 02	Expansion valve		1	
35	928 613 135 00	temperature switch		1	
35	928 613 133 00	temperature switch also use:	928 613 163 00	1	
-	928 613 163 00	Adapter		1	
36	900 075 145 02	Hexagon bolt M 5 X 16		2	
37	N 012 225 2	Spring washer B 5		2	
38	928 573 581 02	guide tube		1	
39	900 028 006 01	Washer A 3		1	
40	N 013 953 2	oval head panel screw B 2,9 X 9,5		1	
41	928 618 101 01	thermal switch		1	
42	N 012 224 3	Spring washer A 4 Discontinued part		2	
42	N 012 224 C	Spring washer A 4		2	
43	900 146 025 02	Round-head screw M 4 X 18		2	

Model	Year	MG	SG	Illustration	Restrictions	UPD	7:30	27.10.2023
928	1978	8	13	813-030		738		

Pos	Part Number	Description	Remark	Qty	Model
44	928 574 383 02	Grommet		2	
45	928 573 383 03	Grommet D >> - MJ 1980 Discontinued part		1	
45	928 573 383 03	Grommet D - MJ 1981>>		1	
46	928 574 027 02	housing		1	
47	999 507 244 02	Crown bracing		1	
48	999 507 020 02	panel nut		1	
48	999 507 020 01	panel nut 4,2		1	
49	928 574 583 04	Water drainage hose for Air distribution housing		1	
-	928 423 523 00	spacer sleeve		1	
50	999 513 001 40	Cable ties		1	
51	999 591 425 03	Securing clip		2	
52	928 574 062 03	Vacuum unit locking flap		1	
53	928 574 397 02	Adjusting lever		1	
54	928 573 313 02	selector shaft		1	PR:563
-	928 573 299 02	Plastic foam strip		2	
-	928 573 717 02	Vacuum line control valve fresh air flap		1	
-	928 573 676 02	Vacuum line control valve Vent	center	1	
-	999 513 025 40	Cable ties 9,5 X 211		2	
-	928 573 094 02	Vacuum unit Vent	center	1	

Model	Year	MG	SG	Illustration	Restrictions	UPD	7:30	27.10.2023
928	1978	8	98	898-000		738		

Pos	Part Number	Description	Remark	Qty	Model
		repair kits			
-	928 799 537 13	1 set of lock cylinders		1	
-	928 799 537 15	1 set of lock cylinders		1	PR:533
-		comprising:			
		Steering protective pipe		1	
		with:			
		steering lock			
		lock cylinder for			
		door handle		2	
		Lid lock		1	
		Upper part			
		End cap		1	
		Cover with lock			
		cylinder			
		lock		1	
		for			
		Glove box			
		Cover with lock			
		cylinder			
		key	rear	3	
		also use:			
		BIS MOD. 78			
-	928 537 111 03	operating rod		2	
-	928 559 075 02	Stone guard film	left	1	
-	928 559 076 02	Stone guard film	right	1	
-	928 799 574 15	Air conditioning	lhd	1	
		repair set			
		For retrofitting			
		also use:			
		D >> - MJ 1979			

Model	Year	MG	SG	Illustration	Restrictions	UPD	7:30	27.10.2023
928	1978	9	01	901-000		738		

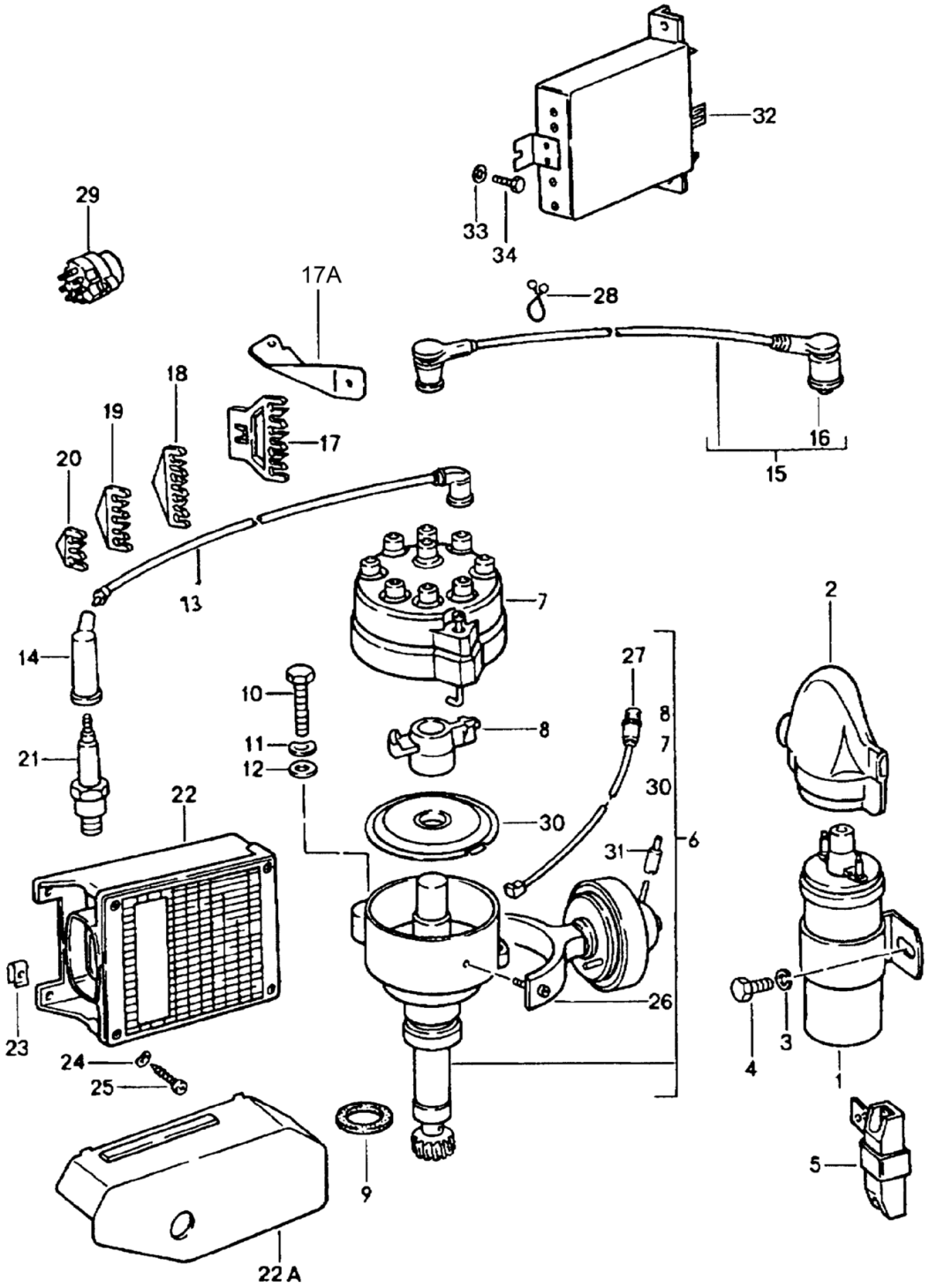

Model	Year	MG	SG	Illustration	Restrictions	UPD	7:30	27.10.2023
928	1978	9	01	901-000		738		

Pos	Part Number	Description	Remark	Qty	Model
		Electrical parts Engine			
1	928 602 503 00	Ignition coil		1	
2	928 602 801 00	Cover cap		1	
3	900 028 004 01	Spring washer		2	
4	N 010 237 6	Hexagon bolt M 8 X 12 D >> - MJ 1980 Discontinued part		2	
4	N 010 237 14	Hexagon bolt M 8 X 12		2	
(4)	N 010 239 11	Hexagon bolt M 8 X 18 D - MJ 1981>> Discontinued part		2	
(4)	N 010 239 30	Hexagon bolt M 8 X 18 D - MJ 1981>>		2	
5	046 905 109	series resistor green OHM 0,4		1	
(5)	046 905 109 A	series resistor red OHM 0,6		1	
6	928 602 031 01	Distributor M28.01/02 D >> - MJ 1979		1	
(6)	928 602 031 AX	Distributor M28.01/02 D >> - MJ 1979		1	
(6)	928 602 031 01	Distributor D - MJ 1980>>		1	"AUS"
(6)	928 602 031 AX	Distributor M28.09/10 D - MJ 1980>>		1	"AUS" "S.."
(6)	928 602 031 02	Distributor D - MJ 1980>>		1	
(6)	928 602 031 BX	Distributor M28.09/10 D - MJ 1980>>		1	
(6)	928 602 033 00	Distributor D - MJ 1980>>		1	

Model	Year	MG	SG	Illustration	Restrictions	UPD	7:30	27.10.2023
928	1978	9	01	901-000		738		

Pos	Part Number	Description	Remark	Qty	Model
(6)	928 602 033 X	Distributor M28.11/12 D - MJ 1980>>		1	
7	928 602 902 00	distributor cap		1	
8	928 602 904 02	rotor for distributor for 928 602 031 00 928 602 031 01 D >> - MJ 1979		1	
(8)	928 602 904 04	rotor for distributor for 928 602 031 02 D - MJ 1980>>		1	
(8)	928 602 904 05	rotor for distributor for 928 602 033 00 D - MJ 1980>>		1	
9	928 602 103 00	seal ring		1	
10	N 010 247 7	Hexagon bolt M 8 X 35 Discontinued part		1	
10	N 010 247 18	Hexagon bolt M 8 X 35		1	
11	N 012 241 8	Spring washer		1	
12	900 089 006 02	Washer		1	
12	900 089 006 01	Washer		1	
13	928 609 061 00	ignition lead	cylinder 1	1	
(13)	928 609 061 01	ignition lead	cylinder 2	1	
(13)	928 609 061 02	ignition lead	cylinder 3	1	
(13)	928 609 061 03	ignition lead	cylinder 4	1	
(13)	928 609 061 05	ignition lead	cylinders 5,6	2	
(13)	928 609 061 06	ignition lead	cylinder 7	1	
(13)	928 609 061 08	ignition lead	cylinder 8	1	
14	928 609 105 02	connector (screened) for ignition leads D >> - MJ 1979		8	928
(14)	928 609 105 03	connector (screened) for ignition leads D - MJ 1980>>		8	
15	928 609 061 07	ignition lead		1	

Model	Year	MG	SG	Illustration	Restrictions	UPD	7:30	27.10.2023
928	1978	9	01	901-000		738		

Pos	Part Number	Description	Remark	Qty	Model
16	477 035 281	connector (screened) for ignition leads No longer use the part here		1	
17	928 609 139 03	Bracket ignition lead		1	
17A	928 609 140 00	Bracket D >> - MJ 1980	right	1	
(17B)	928 609 140 01	Bracket D - MJ 1980>>	right	1	
18	928 609 139 02	pipe holder		2	
19	928 609 139 01	pipe holder		2	
20	928 609 139 00	pipe holder		2	
-		Spark plug also use: for Spark plug	547 09 222	X	
-	547 09 222	Nut for Spark plug		X	
21	999 170 170 90	Spark plug 145/14/3 A (BERU) Discontinued part Repair set for maintenance see illustration:	198-000	8	928
(21)	999 170 170 90	Spark plug (BOSCH) W 8 DC Repair set for maintenance see illustration:	198-000	8	928
(21)	999 170 119 90	Spark plug 175/14/3A BERU Discontinued part		8	928S
(21)	999 170 156 90	Spark plug (BOSCH) WR 7 DC Repair set for maintenance see illustration:	198-000	8	928S
22	928 602 702 02	switch unit 'tci'		1	
22A	928 612 871 02	Cover switch unit 'tci'		1	
23	999 591 348 02	panel nut Discontinued part		3	
23	999 591 348 01	panel nut		3	

Model	Year	MG	SG	Illustration	Restrictions	UPD	7:30	27.10.2023
928	1978	9	01	901-000		738		

Pos	Part Number	Description	Remark	Qty	Model
24	900 028 007 02	Spring washer		3	
25	900 143 046 02	oval head panel screw B 4,8 X 16 Discontinued part		3	
25	900 143 046 01	oval head panel screw B 4,8 X 16		3	
26	928 602 906 00	Vacuum unit for distributor 928.602.031.00 D >> - MJ 1979		1	928
-	999 651 163 40	Push-on sleeve		1	
(26)	928 602 915 05	Vacuum unit for distributor 928.602.031.02 D - MJ 1980>>		1	928
(26)	928 602 915 04	Vacuum unit for distributor 928.602.031.01 D >> - MJ 1979		1	928
(26)	928 602 915 04	Vacuum unit for distributor 928.602.031.01 D - MJ 1980>>		1	928 "S..","AUS"
(26)	928 602 915 01	Vacuum unit for distributor 928.602.033.00		1	928S
27	928 602 907 00	Wiring for Sensor		1	
28	999 651 161 40	Line holder		1	
29	964 613 012 00	Ignition/starter switch		1	
-		Ignition/starter switch See main group 4 4/03/05			
30	928 602 905 00	Dust cover for distributor 928.602.031.00		1	
(30)	928 602 913 00	Dust cover for distributor 928.602.031.01/031.02 928.602.032.02/032.03 928.602.033.00		1	
31	911 110 297 00	Sealing cap for Vacuum unit		1	"AUS","S.."

Model	Year	MG	SG	Illustration	Restrictions	UPD	7:31	27.10.2023
928	1978	9	01	901-005		738		

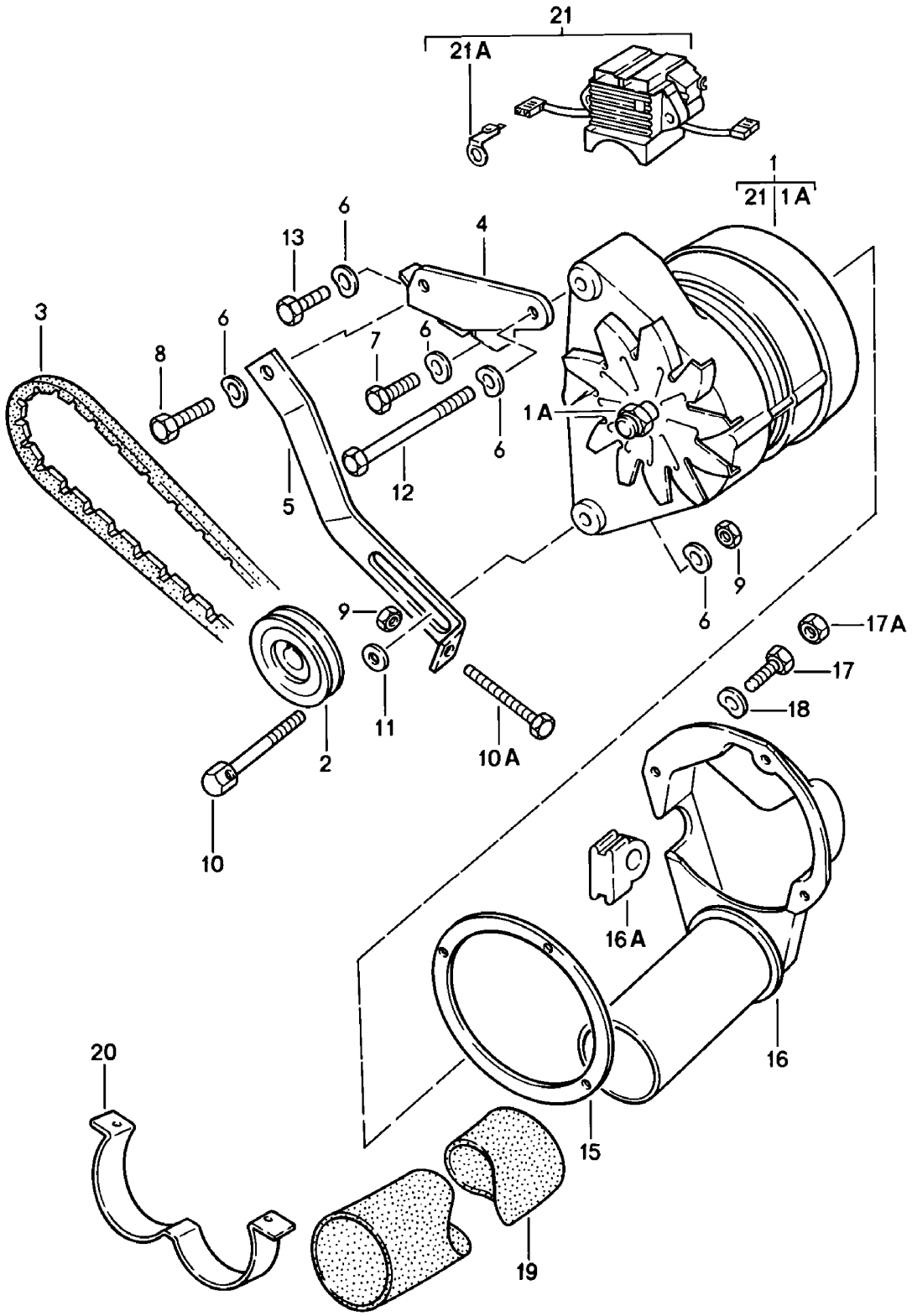

Model	Year	MG	SG	Illustration	Restrictions	UPD	7:31	27.10.2023
928	1978	9	01	901-005		738		

Pos	Part Number	Description	Remark	Qty	Model
		Alternator			
1	928 603 113 03	Alternator D >> - MJ 1981		1	
(1)	928 603 114 01	Alternator D - MJ 1982>> - MJ 1982		1	
(1)	928 603 114 AX	Alternator D - MJ 1982>> - MJ 1982 Discontinued part		1	
(1)	928 603 114 BX	Alternator D - MJ 1982>>		1	
1A	901 603 905 00	Hexagon nut M 16 X 1 D >> - MJ 1981		1	
1A	901 603 905 01	Hexagon nut M 16 X 1		1	
1A	928 603 904 00	1 set attachment parts D - MJ 1982>> - MJ 1982		1	
2	928 603 131 00	pulley D >> - MJ 1981		1	
(2)	928 603 145 02	pulley D - MJ 1982>> - MJ 1982		1	
3	999 192 135 50	v-belt 9,5 X 875 D >> - MJ 1981	narrow	1	
3	999 192 214 50	Poly-V-belt K4 858 D - MJ 1982>> - MJ 1982		1	
4	928 101 041 03	Bracket Alternator D >> - MJ 1978 Discontinued part		1	
(4)	928 101 041 03	Bracket		1	
(5)	928 101 402 07	tensioner for Alternator		1	
6	N 012 241 8	Spring washer		5	
7	900 075 085 02	Hexagon bolt M 8 X 20		1	
8	900 075 029 09	Hexagon bolt M 8 X 25 Discontinued part		1	
8	900 075 029 03	Hexagon bolt M 8 X 25		1	

Model	Year	MG	SG	Illustration	Restrictions	UPD	7:31	27.10.2023
928	1978	9	01	901-005		738		

Pos	Part Number	Description	Remark	Qty	Model
9	900 076 025 02	Hexagon nut D >> - MJ 1981 Discontinued part		2	
9	900 076 064 02	Hexagon nut		2	
(9)	900 076 025 02	Hexagon nut D - MJ 1982>> - MJ 1982 Discontinued part		2	
(9)	900 076 064 02	Hexagon nut D - MJ 1982>>		2	
10	928 101 403 00	Hexagon bolt M 8 X 75		1	
10A	N 010 274 1	Hexagon bolt		1	
11	900 223 001 02	Washer		1	
12	900 074 050 02	Hexagon bolt M 8 X 120		1	
13	N 010 239 11	Hexagon bolt M 8 X 18 Discontinued part		1	
13	N 010 239 30	Hexagon bolt M 8 X 18		1	
15	928 603 135 01	seal ring D >> - MJ 1981		1	
15	928 603 135 02	seal ring D - MJ 1982>> - MJ 1982		1	
16	928 603 133 01	ventilation adapter D >> - MJ 1981		1	
16	928 603 133 04	ventilation adapter D - MJ 1982>> - MJ 1982		1	
16A	928 612 865 02	Hose only in conj. with: 928 603 114 00 D - MJ 1982>> - MJ 1982		1	
17	900 067 008 02	Socket head bolt M 6 X 12 Discontinued part		3	
17	900 067 008 03	Socket head bolt M 6 X 12		3	
17A	N 011 005 14	Hexagon nut D - MJ 1982>> Discontinued part		4	
17A	900 076 091 01	Hexagon nut D - MJ 1982>>		4	

Model	Year	MG	SG	Illustration	Restrictions	UPD	7:31	27.10.2023
928	1978	9	01	901-005		738		

Pos	Part Number	Description	Remark	Qty	Model
18	N 012 226 5	Spring washer D >> - MJ 1981		3	
(18)	900 025 003 02	Washer D - MJ 1982>> - MJ 1982		8	
19	928 603 143 00	Vent hose 1170 MM		1	
(19)	928 603 143 01	Flex hose 320 MM		1	PR:563
(19)	928 603 143 00	Vent hose 1170 MM		1	PR:563
(19)	928 603 143 04	Flex hose 900 MM		1	PR:563
-	928 603 365 00	Edge protection D - MJ 1981>>		3	
-	999 512 349 02	Hose clamp D >> - MJ 1981 Discontinued part		2	PR:563
-	999 512 349 01	Hose clamp		2	PR:563
-	999 512 349 0B	Hose clamp D >> - MJ 1981		2	
-	999 512 349 02	Hose clamp Discontinued part		2	PR:563
-	999 512 349 01	Hose clamp		2	PR:563
-	999 512 349 0B	Hose clamp		2	
-	999 513 023 40	Cable ties		1	PR:563
20	928 603 139 00	Retaining bar		1	
21	928 603 901 02	governor D >> - MJ 1981		1	
21	911 603 913 01	electronic regulator D - MJ 1982>> - MJ 1982		1	
21A	911 603 911 00	flat connector only in conj. with: 928.603.913.01 928.603.114.00 D - MJ 1982>> - MJ 1982		1	

Model	Year	MG	SG	Illustration	Restrictions	UPD	7:31	27.10.2023
928	1978	9	02	902-000		738		

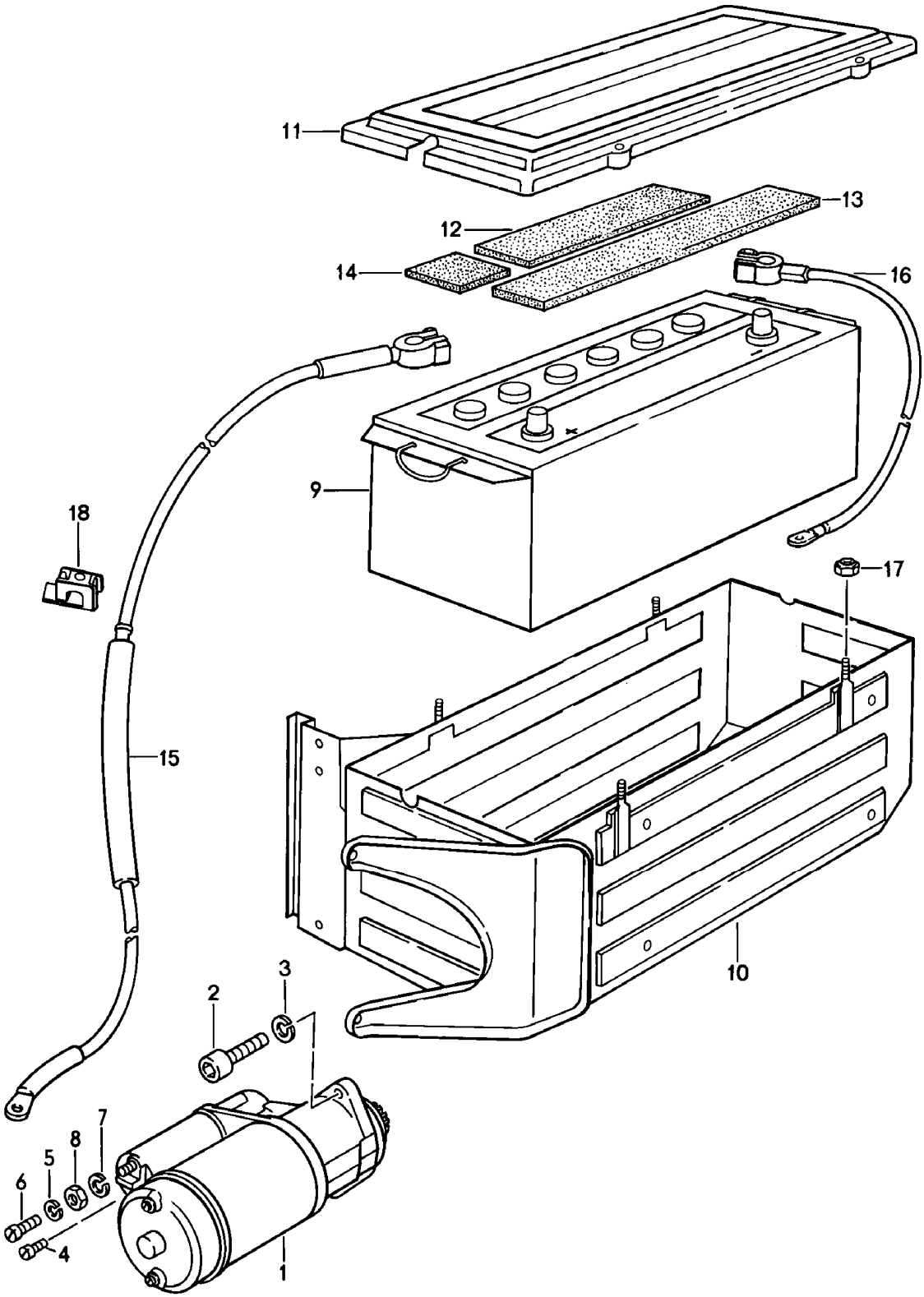

Model	Year	MG	SG	Illustration	Restrictions	UPD	7:31	27.10.2023
928	1978	9	02	902-000		738		

Pos	Part Number	Description	Remark	Qty	Model
		Starter Battery			
1	**928 604 103 04**	**Starter 1,5 KW**		**1**	
(1)	**928 604 103 DX**	**Starter 1,5 KW Discontinued part**		**1**	
(1)	**928 604 103 EX**	**Starter 1,5 KW**		**1**	
2	**900 067 124 02**	**Socket head bolt M 10 X 35**		**2**	
3	**900 027 016 02**	**spring ring B 10 Discontinued part**		**2**	
3	**900 027 016 03**	**spring ring B 10**		**2**	
4	**900 075 275 02**	**Socket head bolt AM 4 X 8**		**1**	
5	**N 012 005 3**	**spring ring**		**1**	
6	**900 075 276 02**	**Socket head bolt AM 5 X 6**		**1**	
7	**N 012 009 3**	**spring ring A 8**		**1**	
8	**900 076 025 02**	**Hexagon nut Discontinued part**		**1**	
8	**900 076 064 02**	**Hexagon nut**		**1**	
9	**928 611 101 00**	**Battery 12 V - 66 AH Discontinued part**		**1**	
(9)	**928 611 101 01**	**Battery 12 V - 66 AH Discontinued part**		**1**	
(9)	**928 611 175 02**	**Battery 12 V - 75 AH Discontinued part**		**1**	
(9)	**999 611 070 20**	**Battery 12 V - 70 AH Discontinued part**		**1**	
(9)	**999 611 070 21**	**Battery 12 V - 70 AH**		**1**	
(9)	**999 611 088 20**	**Battery 12 V - 88 AH**		**1**	

Model	Year	MG	SG	Illustration	Restrictions	UPD	7:31	27.10.2023
928	1978	9	02	902-000		738		

Pos	Part Number	Description	Remark	Qty	Model
10	928 611 017 01	battery box D >> - MJ 1978		1	
11	928 611 147 01	Cover for battery box D >> - MJ 1978		1	
12	928 611 153 00	Insulation strip D >> - MJ 1978	rubber	1	
13	928 611 153 01	Insulation strip D >> - MJ 1978	rubber	1	
14	928 611 159 00	rubber packing D >> - MJ 1978		1	
15	928 612 007 00	Wire set D >> - MJ 1978	lhd	1	
(15)	928 612 007 01	Wire set D >> - MJ 1978	rhd	1	
(15)	928 612 007 01	Wire set D - MJ 1979>>		1	
-	928 612 140 00	Cable holder		1	
-	N 012 234 5	Spring washer		1	
-	900 187 016 02	hexagon head panel screw 6,3 X 13		1	
-	999 513 003 40	Cable ties		1	
-	999 702 124 50	Grommet Battery starter cable		1	
-	999 611 104 00	Battery pos. terminal cover Battery		1	
16	928 612 009 00	Earth line D >> - MJ 1978	lhd	1	
(16)	928 612 009 10	Earth line D >> - MJ 1978	rhd	1	
(16)	928 612 009 10	Earth line D >> - MJ 1981		1	
(16)	928 612 009 13	Earth line D >> - MJ 1978	rhd	1	PR:197
(16)	928 612 009 13	Earth line D >> - MJ 1982		1	PR:197
17	900 910 012 02	Locknut D >> - MJ 1978 Discontinued part		4	
17	900 910 047 09	Locknut		4	

Model	Year	MG	SG	Illustration	Restrictions	UPD	7:31	27.10.2023
928	1978	9	02	902-000		738		

Pos	Part Number	Description	Remark	Qty	Model
18	928 612 902 00	Clamp Battery starter cable		10	
-	999 044 001 02	wing nut for Earth line		1	
-	999 044 001 03	wing nut	M8	1	
-	N 012 241 8	Spring washer for Earth line		1	
-	900 151 008 02	Washer		1	
-	999 702 128 50	Dummy plugs for Earth line		1	
-		Fasteners Battery			
-	911 611 209 00	clamping piece D >> - MJ 1981		1	
-	928 611 209 02	angled bracket D >> - MJ 1981		1	PR:197
-	928 611 209 02	angled bracket D - MJ 1982>> - MJ 1982		1	
-	900 025 007 02	Washer D - MJ 1979>> Discontinued part		1	
-	900 025 007 03	Washer D - MJ 1979>>		1	
-	900 027 015 02	spring ring B 8 D - MJ 1979>>		1	
-	900 027 015 03	spring ring B 8 D - MJ 1979>>		1	
-	900 075 087 02	Hexagon bolt M 8 X 16 D - MJ 1979>> Discontinued part		1	
-	900 075 087 03	Hexagon bolt M 8 X 16 D - MJ 1979>>		1	
-	900 075 087 04	Hexagon bolt M 8 X 16	M8X16 yellow	1	

Model	Year	MG	SG	Illustration	Restrictions	UPD	7:31	27.10.2023
928	1978	9	02	902-005		738		

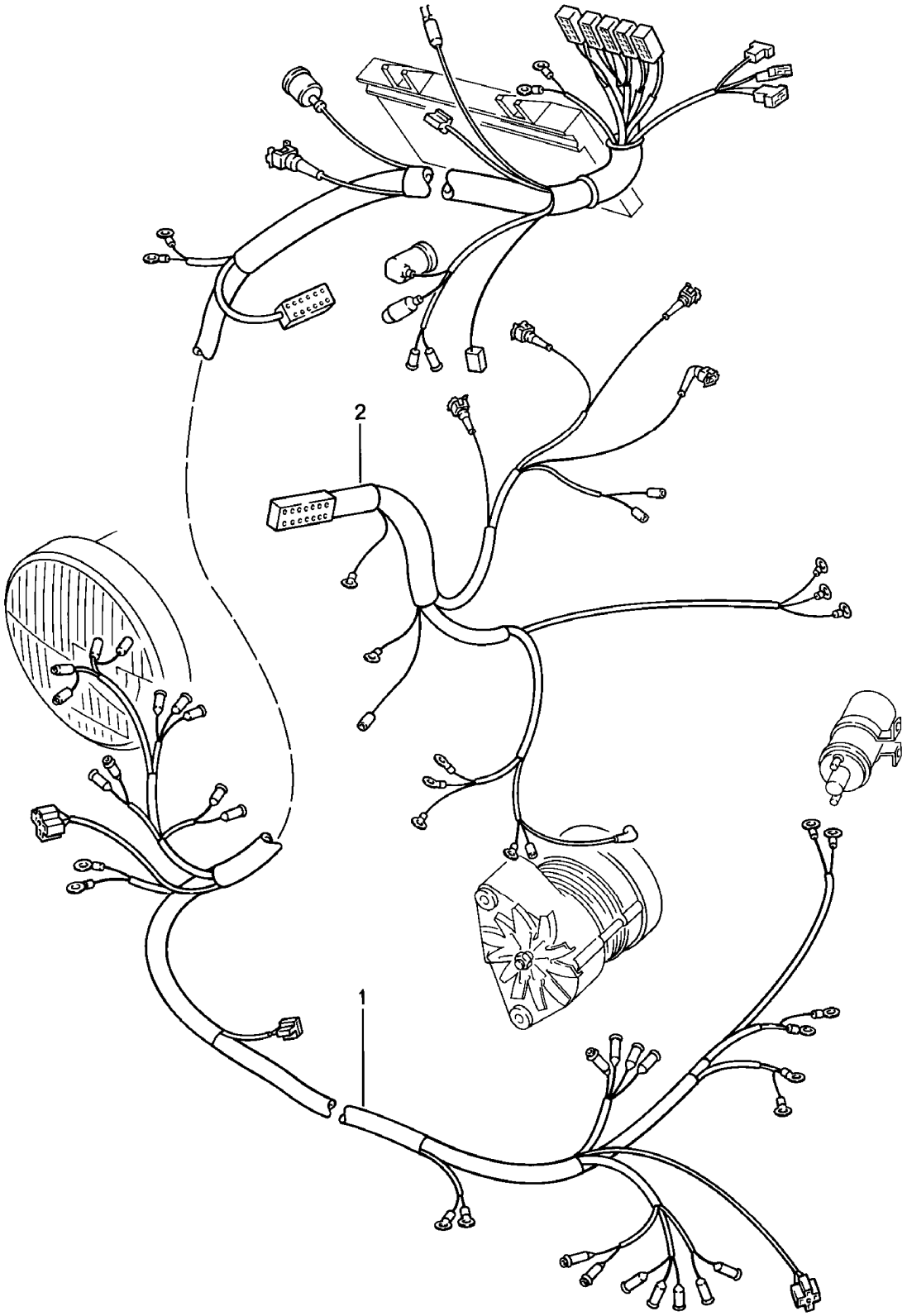

Model	Year	MG	SG	Illustration	Restrictions	UPD	7:31	27.10.2023
928	1978	9	02	902-005		738		

Pos	Part Number	Description	Remark	Qty	Model
		Wire set Front end Engine			
1	928 612 001 02	Wire set Front end F >> 92-89101 485 F >> 92-89209 571	lhd	1	
(1)	928 612 001 06	Wire set Front end F 92-89101 486>> F 92-89209 572>>	lhd	1	
(1)	927 612 001 00	Wire set Front end	rhd	1	
(1)	928 612 001 02	Wire set Front end F >> 92-89101 485 F >> 92-89209 571 D >> - MJ 1979		1	PR:573
2	928 612 002 00	Wire set Engine D >> - MJ 1981		1	
(2)	928 612 002 04	Wire set Engine D - MJ 1982>> - MJ 1982		1	
-	928 612 497 00	Protective cap Oil pressure sender		2	
-	928 612 907 00	Wire set Pneumatic control D - MJ 1980>>		1	
-	928 612 011 00	Earth line Engine Body		1	
-	928 612 012 01	Wire set Starter Switch Gearbox D >> - MJ 1978		1	PR:249
-	928 612 012 02	Wire set Starter Switch Gearbox D - MJ 1979>>		1	PR:249
-	999 651 168 40	Cable holder		1	PR:249
-	927 612 201 00	Wire set Engine compartment light	rhd	1	

Model	Year	MG	SG	Illustration	Restrictions	UPD	7:31	27.10.2023
928	1978	9	02	902-005		738		

Pos	Part Number	Description	Remark	Qty	Model
-		Fasteners Wire set Front end			
-	999 511 124 02	Clamp D >> - MJ 1981		1	
-	999 511 124 01	Clamp D >> - MJ 1981		1	
-	928 503 113 02	Hexagon bolt D >> - MJ 1981		1	
-	999 507 328 02	Cage nut D >> - MJ 1981 Discontinued part		1	
-	999 507 328 0B	Cage nut		1	
-	999 511 138 02	Clamp D - MJ 1982>> - MJ 1982		1	
-	928 503 113 02	Hexagon bolt D - MJ 1982>> - MJ 1982		1	
-	928 612 867 00	Wiring connector	1 pin	1	
-	928 612 869 00	Protective cap		1	
-	N 012 006 4	spring ring		1	
-	928 612 868 00	Hexagon bolt		1	
-	999 513 023 40	Cable ties		13	
-	999 513 007 40	Cable ties	long	8	
-	999 513 023 40	Cable ties		2	
-	999 651 161 40	Line holder		11	
-	999 651 159 02	Cable fastener D >> - MJ 1978		2	
-	N 020 621 1	Clamp		6	
-	928 612 459 00	Cover for cable guide		1	PR:573
-		Fasteners Wire set Engine			
-	999 511 069 02	Clamp Discontinued part		1	
-	999 511 069 0C	Clamp		1	
-	999 513 023 40	Cable ties		4	
-	999 651 162 40	Cable holder		1	

Model	Year	MG	SG	Illustration	Restrictions	UPD	7:31	27.10.2023
928	1978	9	02	902-005		738		

Pos	Part Number	Description	Remark	Qty	Model
-	999 651 154 40	Line holder		2	
-	999 651 166 40	Line holder		1	
-	928 612 477 00	Protective cap for cable connector		1	
-		Fasteners Earth line Engine			
-	N 012 241 8	Spring washer		1	
-	900 076 025 02	Hexagon nut D >> - MJ 1978 Discontinued part		1	
-	900 076 064 02	Hexagon nut		1	
-	N 010 239 11	Hexagon bolt M 8 X 18 D - MJ 1979>> Discontinued part		1	
-	N 010 239 30	Hexagon bolt M 8 X 18 D - MJ 1979>>		1	

Model	Year	MG	SG	Illustration	Restrictions	UPD	7:31	27.10.2023
928	1978	9	02	902-010		738		

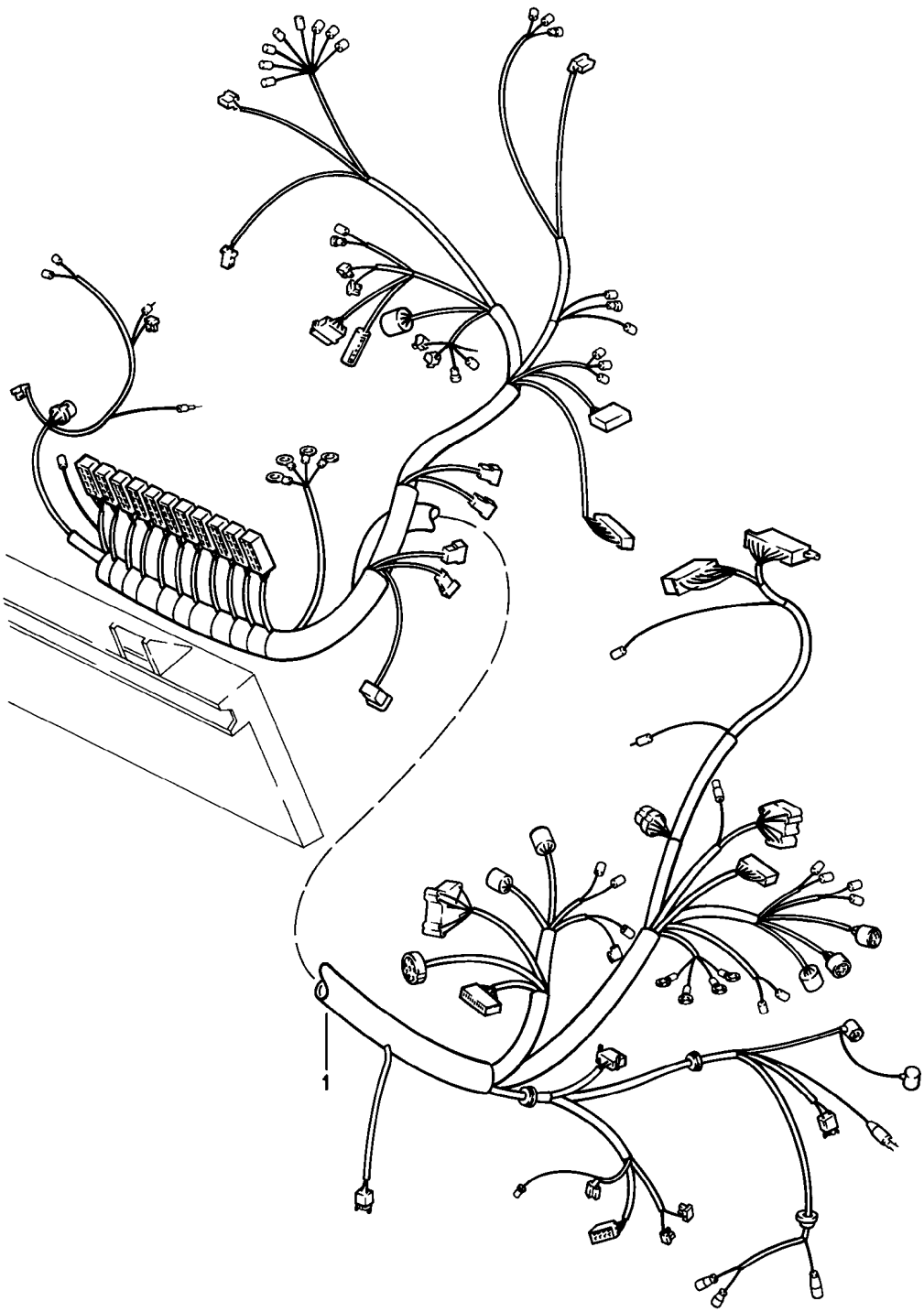

Model	Year	MG	SG	Illustration	Restrictions	UPD	7:31	27.10.2023
928	1978	9	02	902-010		738		

Pos	Part Number	Description	Remark	Qty	Model
		Wire set dashboard			
1	928 612 003 03	Wire set D >> - MJ 1978	lhd	1	
(1)	928 612 003 06	Wire set F >> 92-89101 485 D - MJ 1979>> - MJ 1979	lhd	1	
(1)	928 612 003 09	Wire set F 92-89101 486>> D - MJ 1979>> - MJ 1979	lhd	1	
(1)	928 612 003 13	Wire set D - MJ 1980>> - MJ 1980	lhd lhd	1	
(1)	928 612 003 15	Wire set D - MJ 1981>> - MJ 1981	lhd	1	928S:M 499
(1)	928 612 003 20	Wire set D - MJ 1982>> - MJ 1982 Discontinued part	lhd	1	
(1)	928 612 003 20	Wire set D - MJ 1982>> - MJ 1982	lhd	1	
(1)	927 612 003 00	Wire set D >> - MJ 1978	rhd	1	
(1)	927 612 003 01	Wire set F >> 92-89101 485 D - MJ 1979>> - MJ 1979	rhd	1	
(1)	927 612 003 02	Wire set F 92-89101 486>> D - MJ 1979>> - MJ 1979	rhd	1	
(1)	927 612 003 04	Wire set D - MJ 1980>> - MJ 1980	rhd rhd	1	
(1)	927 612 003 07	Wire set D - MJ 1982>> - MJ 1982	rhd	1	
-	928 612 091 00	Relay central electrics		1	
-		Fasteners Wire set dashboard			
-	999 513 002 40	Cable ties Discontinued part		1	
-	N 020 910 4	Cable ties Discontinued part		1	
-	999 513 003 40	Cable ties		1	

Model	Year	MG	SG	Illustration	Restrictions	UPD	7:31	27.10.2023
928	1978	9	02	902-010		738		

Pos	Part Number	Description	Remark	Qty	Model
-	999 513 023 40	Cable ties		1	
-	999 651 152 02	Cable fastener Discontinued part		1	
-	999 651 152 01	Cable fastener		1	
-	999 591 380 02	Cable fastener		5	
-	477 971 939	cable terminal Discontinued part		5	
-	PCG 971 939	cable terminal		5	

Model	Year	MG	SG	Illustration	Restrictions	UPD	7:31	27.10.2023
928	1978	9	02	902-015		738		

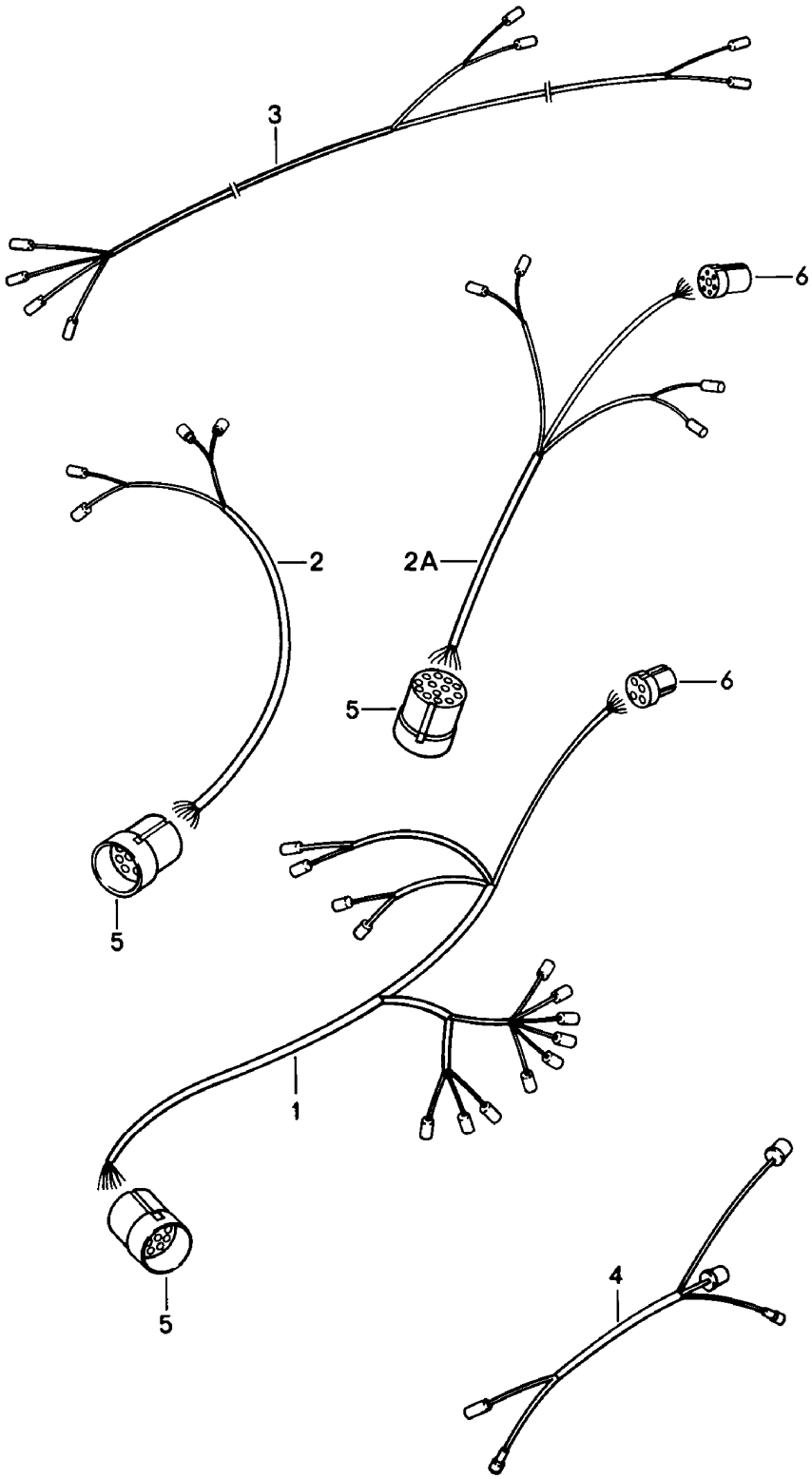

Model	Year	MG	SG	Illustration	Restrictions	UPD	7:31	27.10.2023
928	1978	9	02	902-015		738		

Pos	Part Number	Description	Remark	Qty	Model
		Wire set Passenger compartment doors			
1	928 612 164 00	Wire set Door (drivers side) only in conj. with: Exterior mirror (passenger side) D >> - MJ 1979		1	PR:261
(1)	928 612 164 02	Wire set Door (drivers side) only in conj. with: Exterior mirror (passenger side) D - MJ 1980>>		1	PR:261,528
(1)	928 612 163 00	Wire set Door (drivers side) without: Exterior mirror (passenger side) D >> - MJ 1979		1	
(1)	928 612 163 02	Wire set D - MJ 1980>>		1	
2	928 612 167 00	Wire set Door (passenger side) without: Exterior mirror (passenger side) D >> - MJ 1979		1	
2A	928 612 166 00	Wire set Door (passenger side) only in conj. with: with: Exterior mirror (passenger side) D >> - MJ 1979		1	PR:261
(2A)	928 612 166 02	Wire set Door (passenger side) only in conj. with: Exterior mirror (passenger side) D - MJ 1980>>		1	PR:261,528

Model	Year	MG	SG	Illustration	Restrictions	UPD	7:31	27.10.2023
928	1978	9	02	902-015		738		

Pos	Part Number	Description	Remark	Qty	Model
-	928 612 167 02	Wire set Door Door warning light Window regulator throttle control element Loudspeaker D - MJ 1980>>		2	
3	928 612 067 00	Wire set Loudspeaker D >> - MJ 1979	rear right left	1	
(3)	928 612 067 02	Wire set Loudspeaker D - MJ 1980>>	lhd rear right left	1	
(3)	927 612 067 00	Wire set Loudspeaker D - MJ 1980>>	rhd rear right left	1	
4	928 612 172 01	Wire set Lighting gearshift lever D >> - MJ 1978		1	PR:249
(4)	928 612 172 01	Wire set Lighting gearshift lever D - MJ 1979>>		1	PR:249
-	928 612 068 02	Wire set for 2-channel amplifier (stereo amplifier) D - MJ 1980>>	lhd	1	PR:494
-	927 612 068 00	Wire set D - MJ 1980>>	rhd	1	PR:494
-	928 612 040 00	Wire set Fan	lhd	1	
-	927 612 040 00	Wire set Fan	rhd	1	
-	928 612 016 01	Wire set Reverse light switch		1	
-	928 612 038 00	Wire set Glove box light		1	
-	928 612 020 00	Wire set for Cigarette lighter D - MJ 1980>>		1	

Model	Year	MG	SG	Illustration	Restrictions	UPD	7:31	27.10.2023
928	1978	9	02	902-015		738		

Pos	Part Number	Description	Remark	Qty	Model
-		Fasteners Wire set Reverse light switch			
-	999 651 160 02	Cable holder		2	
-		Fasteners Wire set (drivers side) Door			
-	999 651 163 40	Push-on sleeve D >> - MJ 1979 Discontinued part		1	
-	999 651 164 40	Push-on sleeve D >> - MJ 1981 Discontinued part		2	
-	113 142 261 A	Clip		2	
5	861 972 524	round connector housing	12 pin	1	
6	803 971 979	rd. connector sleeve housing	7 pin	1	
-	999 651 167 02	Cable fastener		1	
-		Fasteners Wire set (passenger side) Door			
-	999 651 163 40	Push-on sleeve		2	

Model	Year	MG	SG	Illustration	Restrictions	UPD	7:32	27.10.2023
928	1978	9	02	902-020		738		

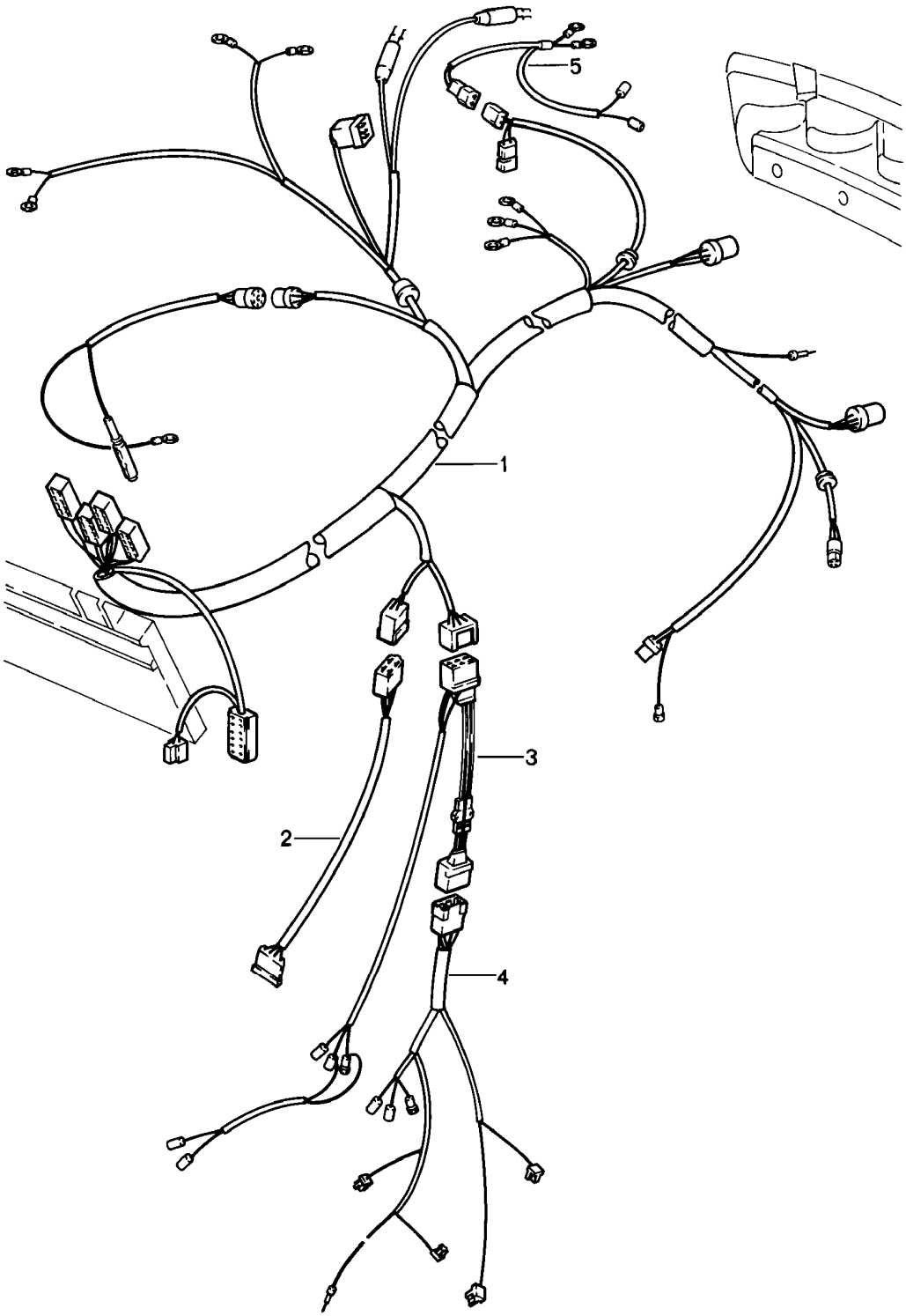

Model	Year	MG	SG	Illustration	Restrictions	UPD	7:32	27.10.2023
928	1978	9	02	902-020		738		

Pos	Part Number	Description	Remark	Qty	Model
		Wire set Rear end			
1	928 612 004 05	Wire set without: pre-supply pump Pump D >> - MJ 1978	lhd	1	
(1)	928 612 004 07	Wire set with: pre-supply pump D - MJ 1979>> - MJ 1979	lhd	1	
(1)	928 612 004 18	Wire set D - MJ 1980>> Discontinued part	lhd	1	
(1)	928 612 004 18	Wire set D - MJ 1980>>	lhd	1	
(1)	927 612 004 01	Wire set without: pre-supply pump D >> - MJ 1978	rhd	1	
(1)	927 612 004 03	Wire set with: pre-supply pump D - MJ 1979>> - MJ 1979	rhd	1	
(1)	927 612 004 10	Wire set D - MJ 1980>>	rhd	1	
(1)	927 612 004 10	Wire set D - MJ 1980>>	rhd	1	
-	928 612 037 00	Wire set Rear lid door contact switch D - MJ 1979>>		1	
2	928 612 006 01	Wire set Glass sunroof		1	
3	928 612 008 03	Wire set b-pillar, inner		1	
4	928 612 005 00	Wire set Rear lid D >> - MJ 1979		1	
(4)	928 612 005 01	Wire set Rear lid D >> - MJ 1981		1	
-	928 612 005 02	Wire set Rear lid D - MJ 1982>> - MJ 1982		1	

Model	Year	MG	SG	Illustration	Restrictions	UPD	7:32	27.10.2023
928	1978	9	02	902-020		738		

Pos	Part Number	Description	Remark	Qty	Model
5	928 612 039 00	Wire set Licence plate light		1	
-	928 612 045 00	Wire set Rear fog light	2 point	1	"GB."
-	928 612 007 00	Wire set Battery starter cable D >> - MJ 1978	lhd	1	
-	928 612 007 01	Wire set Battery starter cable D >> - MJ 1978	rhd lhd rhd	1	
-	928 612 009 00	Earth line Battery D >> - MJ 1981	lhd	1	
-	928 612 009 10	Earth line Battery D >> - MJ 1981	rhd	1	
-	928 612 009 13	Earth line Battery D >> - MJ 1982	rhd	1	PR:197
-		Fasteners Wire set Rear end			
-	999 513 021 40	Cable ties		1	
-	900 622 001 40	Cable support sleeve		1	
-	999 651 154 40	Line holder		3	
-	113 941 189	Cable support sleeve		1	
-	999 651 162 40	Cable holder		4	
-	999 651 158 02	Cable holder		1	
-		Fasteners Wire set Rear lid			
-	477 971 939	cable terminal Discontinued part		5	
-	PCG 971 939	cable terminal		5	
-	999 591 379 01	Cable fastener		5	

Model	Year	MG	SG	Illustration	Restrictions	UPD	7:32	27.10.2023
928	1978	9	03	903-000		738		

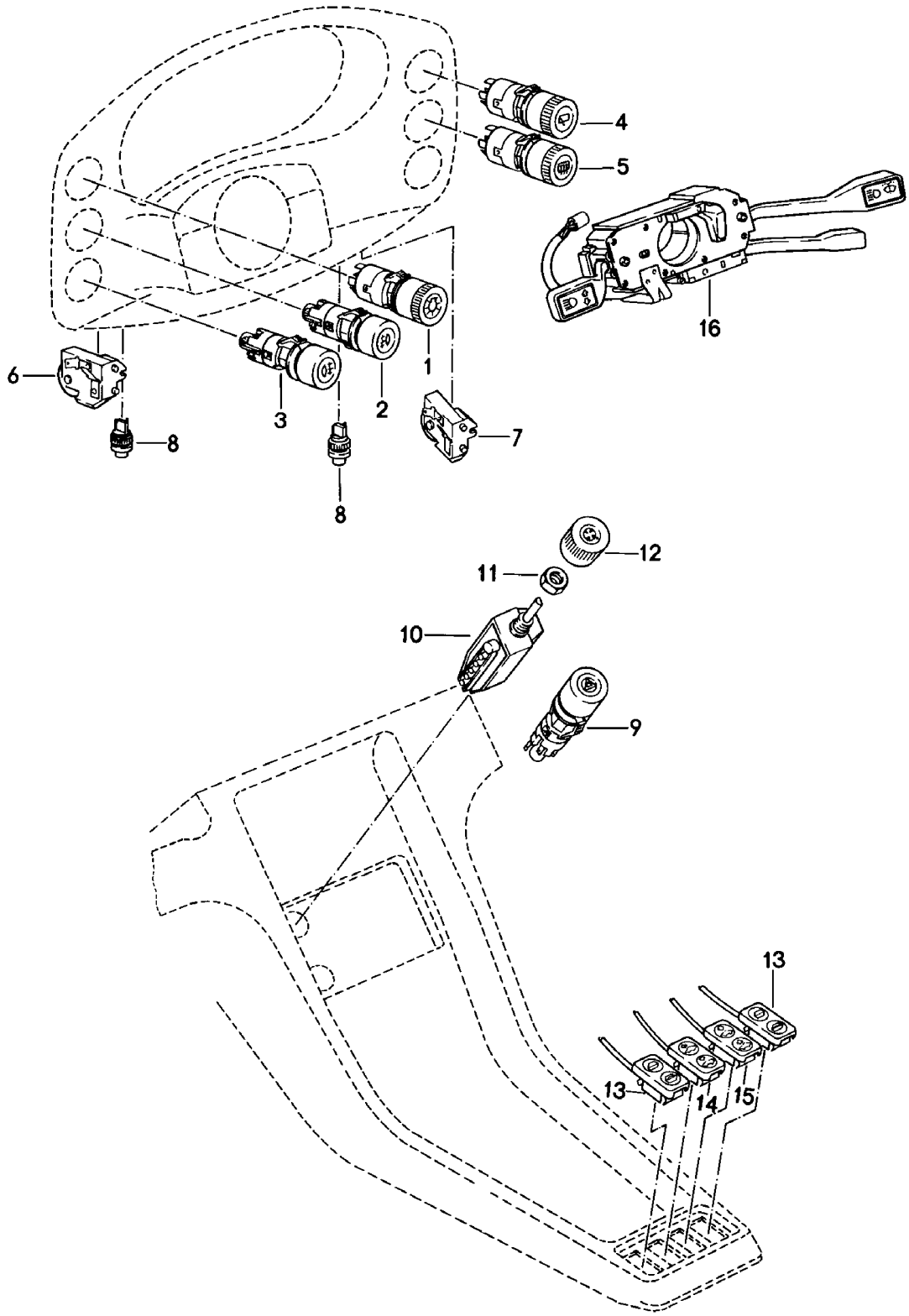

Model	Year	MG	SG	Illustration	Restrictions	UPD	7:32	27.10.2023
928	1978	9	03	903-000		738		

Pos	Part Number	Description	Remark	Qty	Model
		Switch	manual		
1	928 613 103 00	Switch for lighting		1	
2	928 613 111 00	Switch Fog lights		1	
3	928 613 109 00	switch for rear fog light		1	
(3)	928 613 125 00	Button for trip counter reset		1	
4	928 613 113 00	Switch Rear window wiper D >> - MJ 1979		1	
5	928 613 107 01	Switch Rear window	Heated	1	
6	928 613 121 01	Potentiometer Lighting		1	
7	928 613 122 00	Potentiometer for windshield wiper		1	
8	928 613 124 00	Button for trip counter reset		1	
(8)	928 613 124 00	Button for trip counter reset		1	
9	928 613 105 01	emergency light switch D >> - MJ 1979 Discontinued part		1	
(9)	928 613 105 01	emergency light switch		1	
(9)	928 613 105 01	emergency light switch		1	
10	928 613 127 00	switch for blower motor		1	
11	999 034 007 02	hex. nut M 12 X 1	Flat	1	
12	928 613 731 01	Rot. knob switch for blower motor		1	
-	999 591 434 02	Spring switch for blower motor		1	
13	928 613 123 05	Push button Window regulator		2	
14	928 613 120 00	Push button		1	PR:650
15	928 613 129 03	Push button Rear window wiper		1	

Model	Year	MG	SG	Illustration	Restrictions	UPD	7:32	27.10.2023
928	1978	9	03	903-000		738		

Pos	Part Number	Description	Remark	Qty	Model
(15)	928 613 123 04	Dummy cover		1	
(16)	928 613 101 03	Steering column switch with: headlight washer system without: Cruise-control system		1	
(16)	928 613 101 03	Steering column switch without: headlight washer system without: Cruise-control system D >> - MJ 1980		1	
(16)	928 613 101 05	Steering column switch with: headlight washer system with: Cruise-control system		1	PR:489
(16)	928 613 101 10	Steering column switch without: headlight washer system with: Cruise-control system D - MJ 1980>>		1	PR:489
(16)	928 613 101 06	Steering column switch with: headlight washer system with: Cruise-control system With lettering: D - MJ 1980>>	 english	1	"J.."
(16)	928 613 101 07	Steering column switch with: headlight washer system with: Cruise-control system		1	"F.."
(16)	928 613 101 11	Steering column switch without: headlight washer system with: Cruise-control system		1	"F.."
-	999 651 165 02	Cable fastener		1	

Model	Year	MG	SG	Illustration	Restrictions	UPD	7:32	27.10.2023
928	1978	9	03	903-000		738		

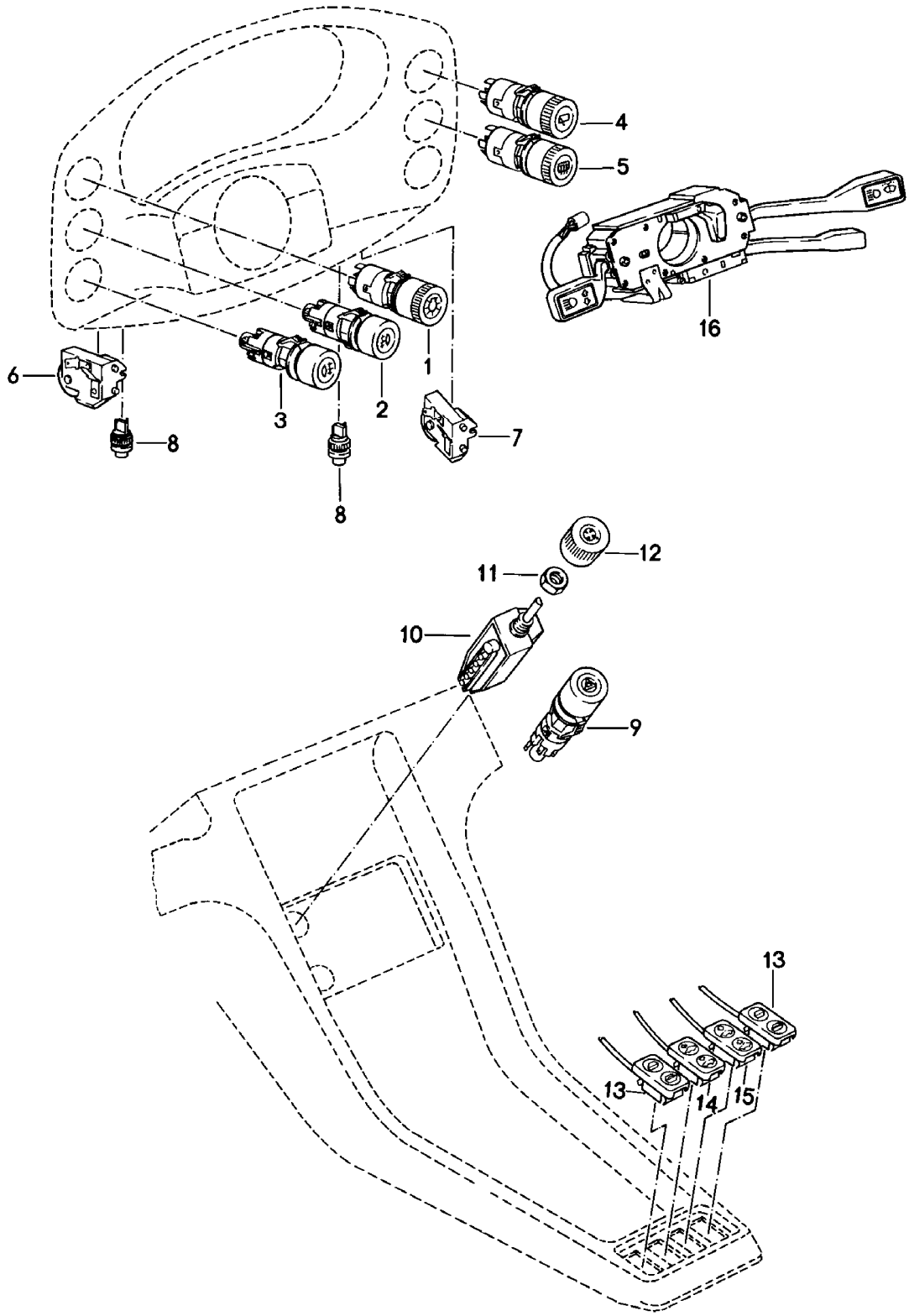

Model	Year	MG	SG	Illustration	Restrictions	UPD	7:32	27.10.2023
928	1978	9	03	903-000		738		

Pos	Part Number	Description	Remark	Qty	Model
		Switch	manual		
1	928 613 103 00	Switch for lighting		1	
2	928 613 111 00	Switch Fog lights		1	
3	928 613 109 00	switch for rear fog light		1	
(3)	928 613 125 00	Button for trip counter reset		1	
4	928 613 113 00	Switch Rear window wiper D >> - MJ 1979		1	
5	928 613 107 01	Switch Rear window	Heated	1	
6	928 613 121 01	Potentiometer Lighting		1	
7	928 613 122 00	Potentiometer for windshield wiper		1	
8	928 613 124 00	Button for trip counter reset		1	
(8)	928 613 124 00	Button for trip counter reset		1	
9	928 613 105 01	emergency light switch D >> - MJ 1979 Discontinued part		1	
(9)	928 613 105 01	emergency light switch		1	
(9)	928 613 105 01	emergency light switch		1	
10	928 613 127 00	switch for blower motor		1	
11	999 034 007 02	hex. nut M 12 X 1	Flat	1	
12	928 613 731 01	Rot. knob switch for blower motor		1	
-	999 591 434 02	Spring switch for blower motor		1	
13	928 613 123 05	Push button Window regulator		2	
14	928 613 120 00	Push button		1	PR:650
15	928 613 129 03	Push button Rear window wiper		1	

Model	Year	MG	SG	Illustration	Restrictions	UPD	7:32	27.10.2023
928	1978	9	03	903-000		738		

Pos	Part Number	Description	Remark	Qty	Model
(15)	928 613 123 04	Dummy cover		1	
(16)	928 613 101 03	Steering column switch with: headlight washer system without: Cruise-control system		1	
(16)	928 613 101 03	Steering column switch without: headlight washer system without: Cruise-control system D >> - MJ 1980		1	
(16)	928 613 101 05	Steering column switch with: headlight washer system with: Cruise-control system		1	PR:489
(16)	928 613 101 10	Steering column switch without: headlight washer system with: Cruise-control system D - MJ 1980>>		1	PR:489
(16)	928 613 101 06	Steering column switch with: headlight washer system with: Cruise-control system With lettering: D - MJ 1980>>	 english	1	"J.."
(16)	928 613 101 07	Steering column switch with: headlight washer system with: Cruise-control system		1	"F.."
(16)	928 613 101 11	Steering column switch without: headlight washer system with: Cruise-control system		1	"F.."
-	999 651 165 02	Cable fastener		1	

Model	Year	MG	SG	Illustration	Restrictions	UPD	7:33	27.10.2023
928	1978	9	03	903-005		738		

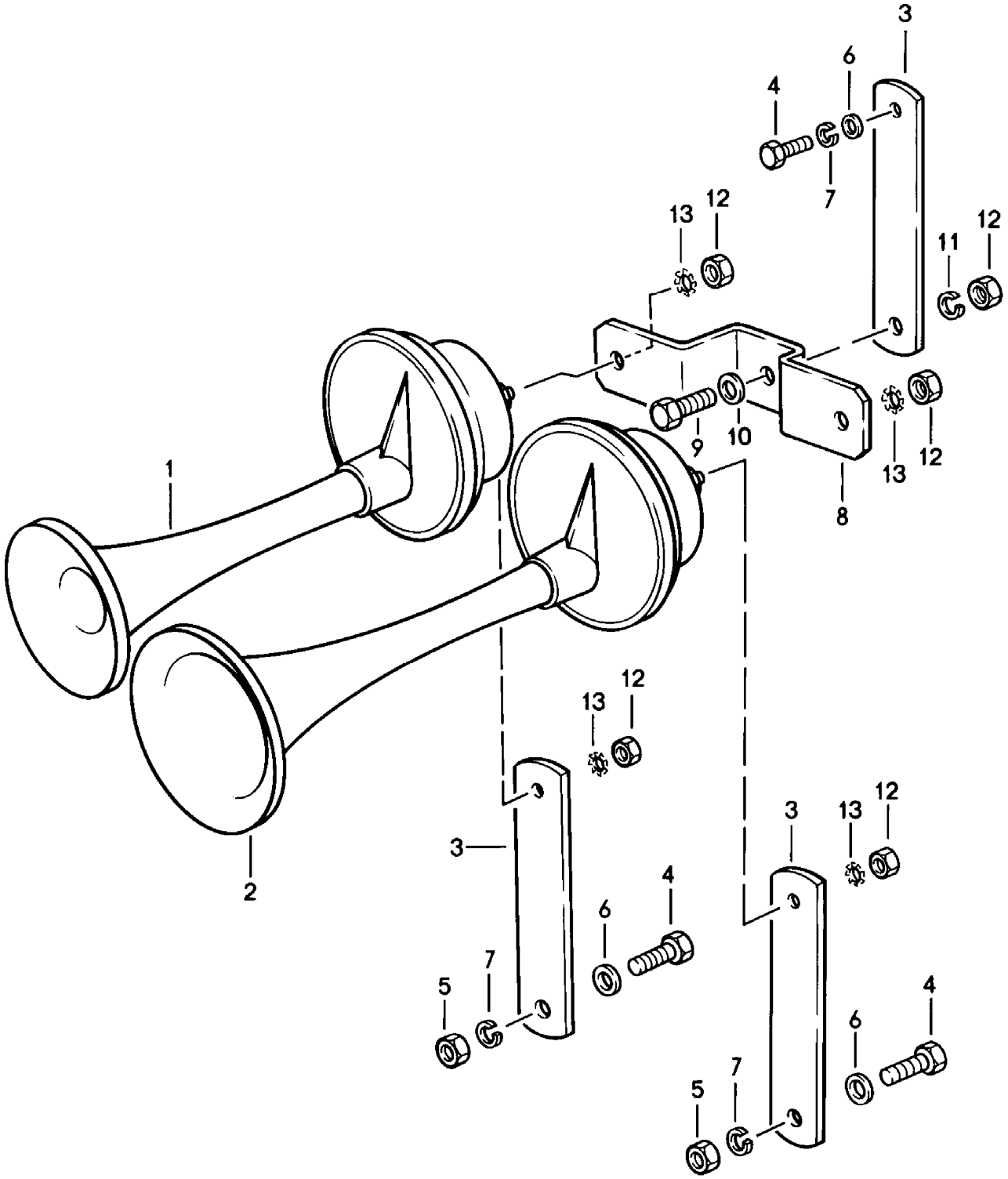

Model	Year	MG	SG	Illustration	Restrictions	UPD	7:33	27.10.2023
928	1978	9	03	903-005		738		

Pos	Part Number	Description	Remark	Qty	Model
		Fanfare			
1	911 635 101 20	Fanfare	high tone	1	
1	911 635 101 21	Fanfare	short high tone	1	
2	911 635 102 20	Fanfare	long low tone	1 1	
2	911 635 102 21	Fanfare	long low tone	1	
3	928 635 101 00	Bracket D >> - MJ 1981		3 2 1	928 928 928S
4	900 075 087 02	Hexagon bolt M 8 X 16 Discontinued part		2 1	928 928S
4	900 075 087 03	Hexagon bolt M 8 X 16		2 1	928 928S
4	900 075 087 04	Hexagon bolt M 8 X 16	M8X16 yellow	2 1	928 928S
5	900 076 025 02	Hexagon nut M 8 Discontinued part		2	928
5	900 076 064 02	Hexagon nut M 8		2	928
6	900 025 007 02	Washer 8,4 Discontinued part		2	928
6	900 025 007 03	Washer 8,4		2	928
(6)	900 025 007 02	Washer Discontinued part		1	928S
(6)	900 025 007 03	Washer		1	928S
7	900 027 015 02	spring ring B 8		2 1	928 928S
7	900 027 015 03	spring ring B 8		2 1	928 928S
-	999 507 328 02	Cage nut D - MJ 1980>> - MJ 1980 Discontinued part		1	928S
-	999 507 328 0B	Cage nut D - MJ 1980>>		1	928S

Model	Year	MG	SG	Illustration	Restrictions	UPD	7:33	27.10.2023
928	1978	9	03	903-005		738		

Pos	Part Number	Description	Remark	Qty	Model
8	928 635 103 01	Bracket D >> - MJ 1980 Discontinued part		1	928S
(8)	928 635 103 01	Bracket D >> - MJ 1981		1	928S
9	900 075 267 02	Hexagon bolt M 6 X 14		1	928S
(10)	N 011 524 7	Washer A 6,4 Discontinued part		1	928S
(10)	N 011 524 27	Washer A 6,4		1	928S
(11)	N 012 006 4	spring ring B 6		1	928S
(12)	900 076 010 02	Nut M 6 Discontinued part		2 3	928 928S
(12)	900 076 010 0B	Nut M 6		2 3	928 928S
(12)	900 076 010 03	Nut M 6		2 3	928 928S
(13)	N 012 006 4	spring ring B 8 D >> - MJ 1980		2 3	928 928S
13	N 042 121 3	Toothed washer D - MJ 1981>>		2 3	928 928S

Model	Year	MG	SG	Illustration	Restrictions	UPD	7:33	27.10.2023
928	1978	9	03	903-010		738		

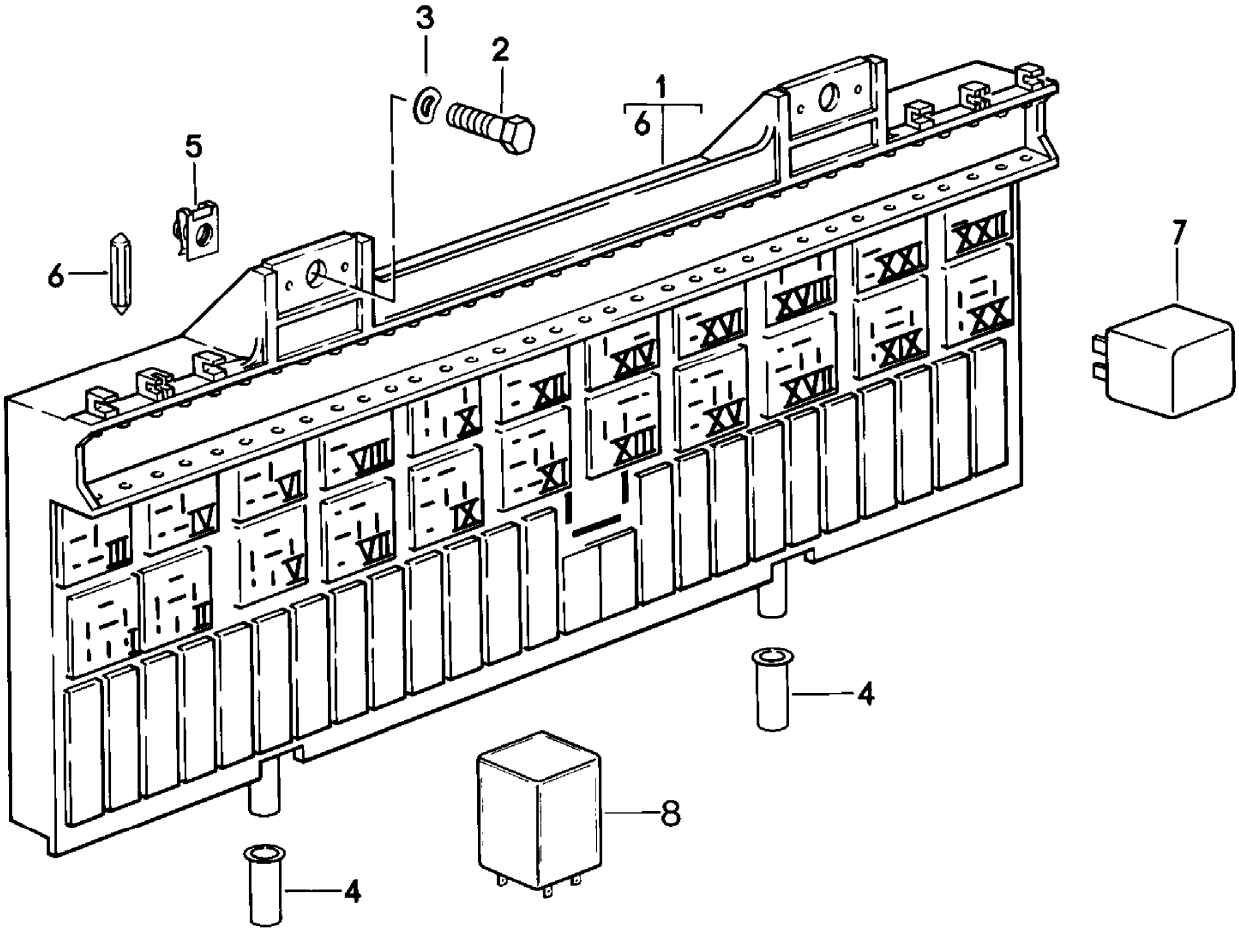

Model	Year	MG	SG	Illustration	Restrictions	UPD	7:33	27.10.2023
928	1978	9	03	903-010		738		

Pos	Part Number	Description	Remark	Qty	Model
		central electrics Relay fuse			
1	928 610 105 00	Carrier plate F >> 92-88101 738 F >> 92-88101 210 D >> - MJ 1979		1	PR:249
(1)	928 610 105 01	Carrier plate D >> - MJ 1979		1	
(1)	928 610 105 04	Carrier plate D - MJ 1980>> - MJ 1980 Discontinued part		1	
(1)	928 610 105 04	Carrier plate D >> - MJ 1981		1	
(1)	928 610 105 05	Carrier plate D - MJ 1982>> - MJ 1982		1	
2	900 075 014 02	Hexagon bolt M 6 X 18 Discontinued part		2	
2	900 075 014 03	Hexagon bolt M 6 X 18		2	
3	N 012 226 5	Spring washer		2	
4	928 628 287 00	Grommet		2	
5	999 507 246 02	panel nut Discontinued part		2	
5	999 507 246 01	panel nut		2	
6	N 017 121 1	Safety fuse 8 A		X	
(6)	N 017 121 4	fuse 16 A		X	
(6)	N 017 121 5	fuse 25 A		X	
(6)	900 321 002 90	Safety fuse T 0,40 B central locking system		2	
(6)	900 321 002 91	Safety fuse T 0,40 B central locking system		2	
7		Relay D >> - MJ 1979		X	

Model	Year	MG	SG	Illustration	Restrictions	UPD	7:33	27.10.2023
928	1978	9	03	903-010		738		

Pos	Part Number	Description	Remark	Qty	Model
(7)	928 615 115 00	retardation relay for Rear window relay location/code no.:	 Heated I-II	1	
(7)	928 615 116 00	Relay Pop-up headlight relay location/code no.: D >> - MJ 1978 Discontinued part	 III	1 1	
(7)	928 615 116 01	Relay Pop-up headlight		1 1	III
(7)	928 615 127 00	Relay Pop-up headlight relay location/code no.: D >> - MJ 1978	 IV	1	
(7)	111 953 227 D	turn signal/hazard light relay relay location/code no.: Discontinued part	 V	1	
(7)	191 953 227 A	turn signal/hazard light relay relay location/code no.: Discontinued part	 V	1	
(7)	1H0 953 227	turn signal/hazard light relay relay location/code no.:	 V	1	
(7)	PCG 953 227	turn signal/hazard light relay relay location/code no.:	3 pin V	1	
(7)	928 615 131 00	Flasher relay only in conj. with: Tow hitch relay location/code no.:	 V	1	
(7)	928 615 117 00	Relay Window regulator relay location/code no.:	 VI	1	
(7)	928 618 111 00	relay for headlight washer relay location/code no.:	 VII	1	
(7)	911 618 102 01	Relay For seat belt relay location/code no.:	 IX	1 1	
(7)	928 615 117 00	Relay Fanfare relay location/code no.:	 X	1	
(7)	928 618 103 00	Diode plate relay location/code no.:	 XI	1	
(7)	928 618 105 00	Relay Compressor Air conditioning relay location/code no.:	 XI	1	PR:573

Model	Year	MG	SG	Illustration	Restrictions	UPD	7:33	27.10.2023
928	1978	9	03	903-010		738		

Pos	Part Number	Description	Remark	Qty	Model
(7)	928 615 117 00	Relay Fog lights relay location/code no.:	 XII	1	
(7)	928 615 119 00	Relay for high beam relay location/code no.: Discontinued part	 XIII	1	
(7)	928 615 119 01	Relay for high beam relay location/code no.:	 XIII	1	
(7)	928 615 123 00	Relay relay location/code no.:	 XIV	1	
(7)	928 615 125 00	Relay Starter relay location/code no.:	 XV	1	
(7)	928 615 117 00	Relay Starter relay location/code no.:	 XV	1	PR:249
(7)	928 615 116 00	Relay relay location/code no.: Discontinued part	 XVI	1	
(7)	928 615 116 01	Relay		1	XVI
(7)	928 615 113 01	Relay Fuel pump relay location/code no.: Discontinued part	 XVII	1	
(7)	928 615 111 00	Relay relay location/code no.:	 XVIII	1	PR:573
(7)	993 615 101 00	Relay windshield wiper relay location/code no.: Discontinued part	 XIX	1	
(7)	993 615 101 01	Relay windshield wiper relay location/code no.:	 XIX	1	
(7)	928 618 113 01	Relay headlight washer system relay location/code no.: Discontinued part	 XX	1	
(7)	928 618 113 02	Relay headlight washer system		1	XX
(7)	928 618 113 03	Relay headlight washer system		1	XX

Model	Year	MG	SG	Illustration	Restrictions	UPD	7:33	27.10.2023
928	1978	9	03	903-010		738		

Pos	Part Number	Description	Remark	Qty	Model
(7)	928 618 115 00	contact bridge without: headlight washer system relay location/code no.:	 XX	1	
(7)	928 615 117 00	Relay Fan relay location/code no.:	 XXI	1	
(7)	928 615 117 00	Relay Defroster flap relay location/code no.:	 XXII	1	
-		Relay Seat See main group 8 8/08/15	 front		
-		Relay D - MJ 1980>> - MJ 1980			
(7)	928 615 115 00	retardation relay for Rear window relay location/code no.:	 Heated I-II	1	
(7)	111 953 227 D	turn signal/hazard light relay relay location/code no.: Discontinued part	 V	1	
(7)	191 953 227 A	turn signal/hazard light relay relay location/code no.: Discontinued part	 V	1	
(7)	1H0 953 227	turn signal/hazard light relay relay location/code no.:	 V	1	
(7)	PCG 953 227	turn signal/hazard light relay relay location/code no.:	3 pin V	1	
(7)	928 615 131 00	Flasher relay only in conj. with: Tow hitch relay location/code no.:	 V	1	
(7)	928 615 117 00	Relay Window regulator relay location/code no.:	 VI	1	
(7)	928 618 111 00	relay for headlight washer relay location/code no.:	 VII	1	
(7)	928 615 117 00	Relay Fanfare relay location/code no.:	 X	1	
(7)	928 615 117 00	Relay Fog lights relay location/code no.:	 XII	1	

Model	Year	MG	SG	Illustration	Restrictions	UPD	7:33	27.10.2023
928	1978	9	03	903-010		738		

Pos	Part Number	Description	Remark	Qty	Model
(7)	993 615 101 00	Relay relay location/code no.: Discontinued part	XIII	1	
(7)	993 615 101 01	Relay relay location/code no.:	XIII	1	
(7)	928 615 125 00	Relay Starter relay location/code no.:	XIV	1	
(7)	928 615 117 00	Relay Starter relay location/code no.:	XIV	1	
(7)	928 618 113 01	Relay headlight washer system relay location/code no.: Discontinued part	XV	1	
(7)	928 618 113 02	Relay headlight washer system		1	XV
(7)	928 618 113 03	Relay headlight washer system		1	XV
(7)	928 618 115 00	contact bridge without: headlight washer system relay location/code no.:	XV	1	
(7)	928 615 113 01	Relay Fuel pump relay location/code no.: Discontinued part	XVII	1	
(7)	928 615 111 00	Relay Fan relay location/code no.:	XVIII	1	PR:573
(7)	928 618 107 02	Relay Pop-up headlight relay location/code no.: Discontinued part	XIX	1	
(7)	928 618 107 05	Relay Pop-up headlight relay location/code no.:	XIX	1	
(7)	928 618 107 07	Relay Pop-up headlight relay location/code no.:	XIX	1	
(7)	928 618 107 02	Relay Pop-up headlight relay location/code no.: Discontinued part	XX	1	
(7)	928 618 107 05	Relay Pop-up headlight relay location/code no.:	XX	1	

Model	Year	MG	SG	Illustration	Restrictions	UPD	7:33	27.10.2023
928	1978	9	03	903-010		738		

Pos	Part Number	Description	Remark	Qty	Model
(7)	928 618 107 07	Relay Pop-up headlight relay location/code no.:	 XX	1	
(7)	928 615 117 00	Relay Fan relay location/code no.:	 XXI	1	
(7)	928 615 117 00	Relay headlight washer system relay location/code no.:	 XXII	1	
-		Relay D - MJ 1981>> - MJ 1981			
(7)	928 615 115 00	retardation relay for Rear window relay location/code no.:	 Heated I-II	1	
(7)	111 953 227 D	turn signal/hazard light relay relay location/code no.: Discontinued part	 V	1	
(7)	191 953 227 A	turn signal/hazard light relay relay location/code no.: Discontinued part	 V	1	
(7)	1H0 953 227	turn signal/hazard light relay relay location/code no.:	 V	1	
(7)	PCG 953 227	turn signal/hazard light relay relay location/code no.:	3 pin V	1	
(7)	928 615 131 00	Flasher relay only in conj. with: Tow hitch relay location/code no.:	 V	1	
(7)	928 615 116 00	Relay Window regulator relay location/code no.: Discontinued part	 VI	1	
(7)	928 615 116 01	Relay Window regulator		1	VI
(7)	928 618 111 00	relay for headlight washer relay location/code no.:	 VII	1	
(7)	928 615 117 00	Relay Signal horn relay location/code no.:	 X	1	
(7)	928 615 117 00	Relay Fog lights relay location/code no.:	 XII	1	

Model	Year	MG	SG	Illustration	Restrictions	UPD	7:33	27.10.2023
928	1978	9	03	903-010		738		

Pos	Part Number	Description	Remark	Qty	Model
(7)	993 615 101 00	Relay relay location/code no.: Discontinued part	XIII	1	
(7)	993 615 101 01	Relay relay location/code no.:	XIII	1	
(7)	928 615 125 00	Relay Starter relay location/code no.:	XIV	1	
(7)	928 615 117 00	Relay Starter relay location/code no.:	XIV	1	PR:249
(7)	928 618 113 01	Relay headlight washer system relay location/code no.: Discontinued part	XV	1	
(7)	928 618 113 02	Relay headlight washer system		1	XV
(7)	928 618 113 03	Relay headlight washer system		1	XV
(7)	928 618 115 00	contact bridge without: headlight washer system relay location/code no.:	XV	1	
(7)	928 615 113 01	Relay Fuel pump relay location/code no.: Discontinued part	XVII	1	
(7)	928 615 111 00	Relay Fan relay location/code no.:	XVIII	1	PR:573
(7)	928 618 107 02	Relay Pop-up headlight relay location/code no.: Discontinued part	XIX	1	
(7)	928 618 107 05	Relay Pop-up headlight relay location/code no.:	XIX	1	
(7)	928 618 107 07	Relay Pop-up headlight relay location/code no.:	XIX	1	
(7)	928 618 107 02	Relay Pop-up headlight relay location/code no.: Discontinued part	XX	1	
(7)	928 618 107 05	Relay Pop-up headlight relay location/code no.:	XX	1	

Model	Year	MG	SG	Illustration	Restrictions	UPD	7:33	27.10.2023
928	1978	9	03	903-010		738		

Pos	Part Number	Description	Remark	Qty	Model
(7)	928 618 107 07	Relay Pop-up headlight relay location/code no.:	 XX	1	
(7)	928 615 117 00	Relay Fan relay location/code no.:	 XXI	1	
(7)	928 615 117 00	Relay Servomotor for defroster flap relay location/code no.:	 XXII	1	
-		Relay D - MJ 1982>> - MJ 1982			
(7)	928 615 115 00	retardation relay for Rear window relay location/code no.:	 Heated I-II	1	
(7)	111 953 227 D	turn signal/hazard light relay relay location/code no.: Discontinued part	 V	1	
(7)	191 953 227 A	turn signal/hazard light relay relay location/code no.: Discontinued part	 V	1	
(7)	1H0 953 227	turn signal/hazard light relay relay location/code no.:	 V	1	
(7)	PCG 953 227	turn signal/hazard light relay relay location/code no.:	3 pin V	1	
(7)	928 615 131 00	Flasher relay only in conj. with: Tow hitch relay location/code no.:	 V	1	
(7)	928 615 116 00	Relay Window regulator relay location/code no.: Discontinued part	 VI	1	
(7)	928 615 116 01	Relay Window regulator		1	VI
(7)	928 618 111 00	relay for headlight washer relay location/code no.:	 VII	1	
(7)	141 951 253 B	Relay Signal horn relay location/code no.:	 X	1	
(7)	141 951 253 B	Relay Fog lights relay location/code no.:	 XII	1	

Model	Year	MG	SG	Illustration	Restrictions	UPD	7:33	27.10.2023
928	1978	9	03	903-010		738		

Pos	Part Number	Description	Remark	Qty	Model
(7)	993 615 101 00	Relay relay location/code no.: Discontinued part	XIII	1	
(7)	993 615 101 01	Relay relay location/code no.:	XIII	1	
(7)	928 612 473 00	Plug inserts for Starter relay location/code no.:	XIV	1	
(7)	141 951 253 B	Relay Starter relay location/code no.:	XIV	1	PR:249
(7)	928 618 113 01	Relay headlight washer system relay location/code no.: Discontinued part	XV	1	
(7)	928 618 113 02	Relay headlight washer system		1	XV
(7)	928 618 113 03	Relay headlight washer system		1	XV
(7)	928 615 113 01	Relay Fuel pump relay location/code no.: Discontinued part	XVII	1	
(7)	141 951 253 B	Relay Fan Air conditioning relay location/code no.:	XVIII	1	
(7)	928 618 107 02	Relay Pop-up headlight relay location/code no.: Discontinued part	XIX	1	
(7)	928 618 107 05	Relay Pop-up headlight relay location/code no.:	XIX	1	
(7)	928 618 107 07	Relay Pop-up headlight relay location/code no.:	XIX	1	
(7)	928 618 107 02	Relay Pop-up headlight relay location/code no.: Discontinued part	XX	1	
(7)	928 618 107 05	Relay Pop-up headlight relay location/code no.:	XX	1	

Model	Year	MG	SG	Illustration	Restrictions	UPD	7:33	27.10.2023
928	1978	9	03	903-010		738		

Pos	Part Number	Description	Remark	Qty	Model
(7)	928 618 107 07	Relay Pop-up headlight relay location/code no.:	 XX	1	
(7)	141 951 253 B	Relay Fan relay location/code no.:	 XXI	1	
(7)	141 951 253 B	Relay headlight washer system relay location/code no.:	 XXII	1	
-		Relay Seat See main group 8 8/08/15	 front		
-		Relay Centre console		X	
8	911 618 102 01	Relay For seat belt D - MJ 1980>>		1	
(8)	928 618 104 00	Relay Rear window wiper D - MJ 1980>>		1	
(8)	911 617 119 00	relay for temperature sensor Control unit for emissions control D - MJ 1980>>		2	"J.."

Model	Year	MG	SG	Illustration	Restrictions	UPD	7:33	27.10.2023
928	1978	9	04	904-000		738		

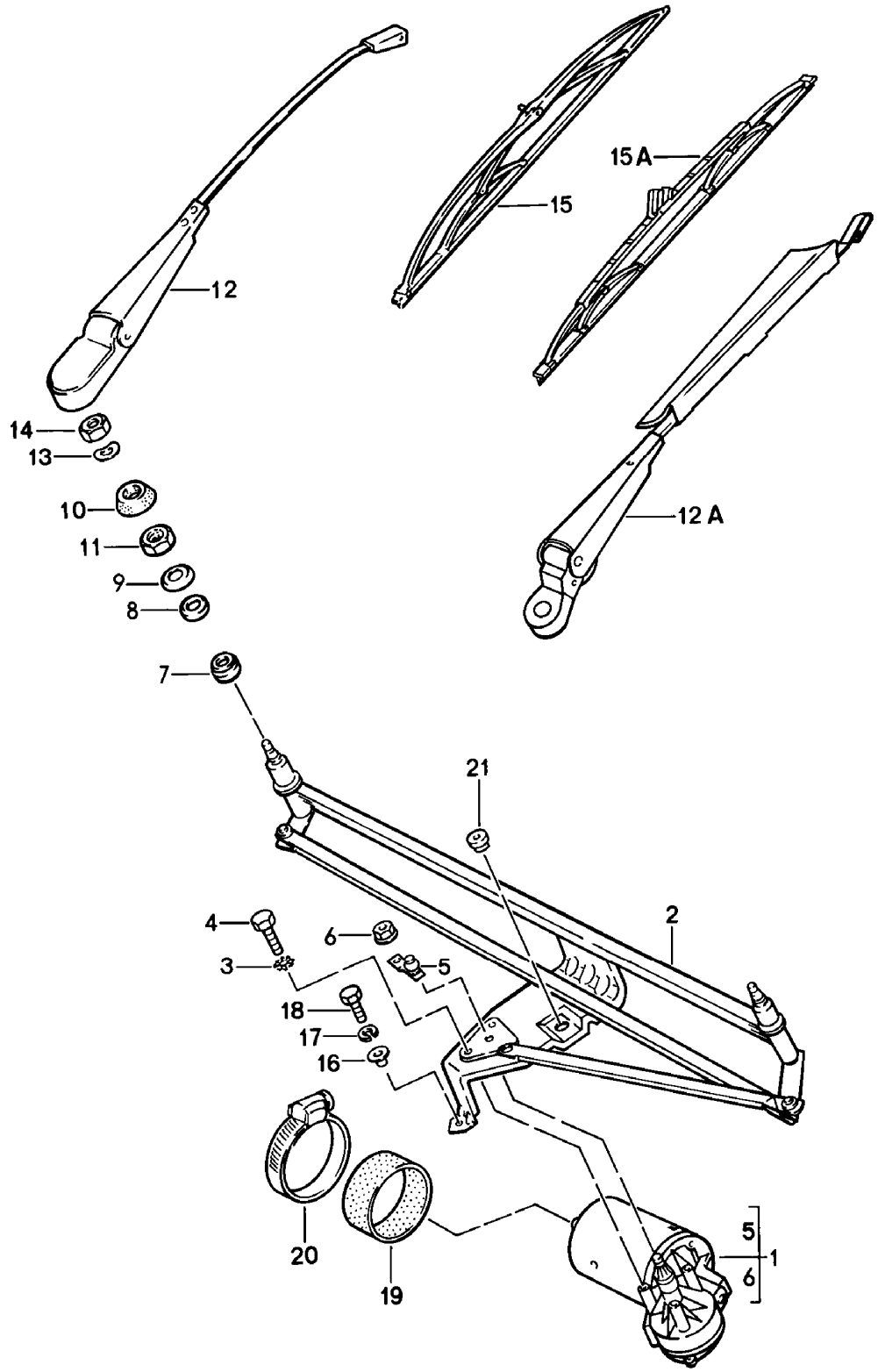

Model	Year	MG	SG	Illustration	Restrictions	UPD	7:33	27.10.2023
928	1978	9	04	904-000		738		

Pos	Part Number	Description	Remark	Qty	Model
		Windscreen wiper system, compl	front		
1	928 628 303 00	Wiper motor D >> - MJ 1980		1	
(1)	928 628 303 01	Wiper motor D - MJ 1981>>		1	
2	928 628 221 00	Crank drive	lhd	1	
(2)	927 628 221 00	Crank drive	rhd	1	
3	N 042 121 3	Toothed washer		3	
4	900 075 010 02	Hexagon nut Discontinued part		3	
4	N 010 212 14	Hexagon bolt Discontinued part		3	
4	999 072 005 09	Hexagon nut Discontinued part		3	
4	999 072 005 01	Hexagon bolt		3	
5	928 628 233 02	lever Wiper motor Discontinued part		1	
(5)	928 628 233 02	lever for Wiper motor		1	
6	999 084 045 02	Locknut D >> - MJ 1980		1	
(6)	999 084 055 02	Locknut D - MJ 1981>>		1	
7	901 628 924 00	Rubber bush		2	
8	901 628 923 01	Rubber bush		2	
9	911 628 963 00	Cover disc Black		2	
10	928 628 716 02	Grommet	right	1	
(10)	928 628 717 01	Grommet	left	1	
11	477 955 149	Hexagon nut		2	
12	928 628 213 01	Wiper arm (passenger side) D >> - MJ 1978	lhd	1	
12A	928 628 213 05	Wiper arm (passenger side) D - MJ 1979>>	lhd	1	
(12)	927 628 213 02	Wiper arm	rhd	2	

Model	Year	MG	SG	Illustration	Restrictions	UPD	7:33	27.10.2023
928	1978	9	04	904-000		738		

Pos	Part Number	Description	Remark	Qty	Model
12	928 628 213 06	Wiper arm with: Spoiler (drivers side) D >> - MJ 1978	lhd	1	
(12A)	928 628 213 06	Wiper arm with: Spoiler (drivers side) D - MJ 1979>>	lhd	1	
(12A)	928 628 213 06	Wiper arm with: Spoiler (drivers side) D - MJ 1979>>	lhd	1	
-	928 628 623 00	Cap		2	
13	803 955 437	Spring washer		2	
14	N 011 151 2	Hexagon nut		2	
15	928 628 217 01	wiper blade D >> - MJ 1978		2	
15A	478 955 425	wiper blade D - MJ 1979>>		2	
16	928 628 289 00	bush		2	
-	N 011 666 7	Washer		1	
17	N 012 006 4	spring ring B 6		2	
(18)	900 075 014 02	Hexagon bolt M 6 X 18 Discontinued part		2	
(18)	900 075 014 03	Hexagon bolt M 6 X 18		2	
19	928 628 759 00	rubber support ring		1	
20	928 628 760 00	Hose clip		1	
21	928 628 287 00	Grommet		2	
-	999 507 246 02	panel nut Discontinued part		2	
-	999 507 246 01	panel nut		2	

Model	Year	MG	SG	Illustration	Restrictions	UPD	7:34	27.10.2023
928	1978	9	04	904-005		738		

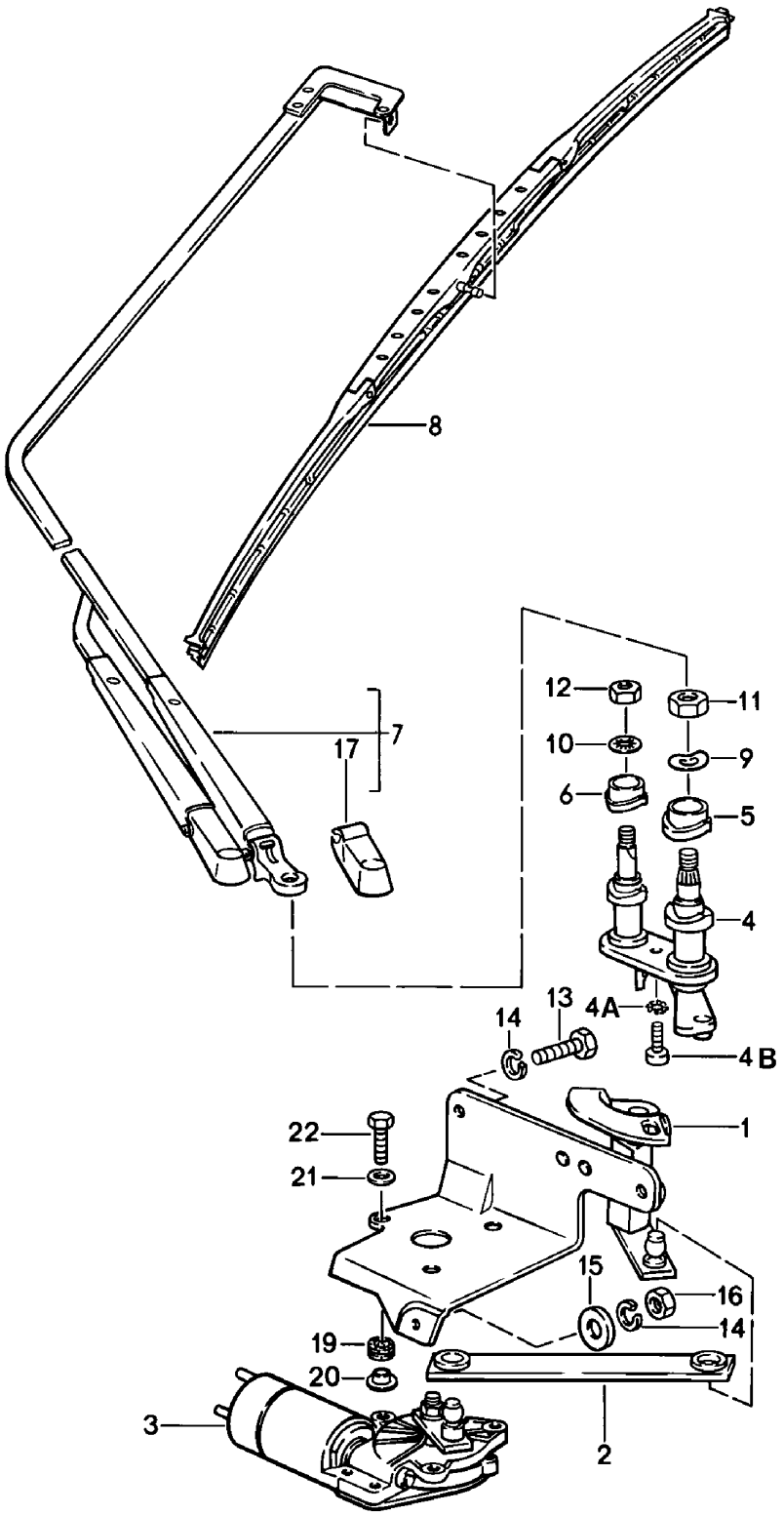

Model	Year	MG	SG	Illustration	Restrictions	UPD	7:34	27.10.2023
928	1978	9	04	904-005		738		

Pos	Part Number	Description	Remark	Qty	Model
		Windscreen wiper system, compl	rear		
1	928 628 071 03	Console for engine mounting with: Mounting		1	
2	928 628 202 02	toggle lever		1	
3	928 628 403 02	Wiper motor with: crank		1	
4	928 628 309 02	wiper bearing	upper	1	
4A	N 012 007 2	spring ring A 6 Discontinued part		1	
4A	900 027 004 03	spring ring A 6		1	
4B	900 119 014 02	Socket head bolt		1	
5	928 628 325 01	bush D >> - MJ 1981 Discontinued part		1	
(5)	928 628 325 01	bush		1	
6	928 628 326 01	bush D >> - MJ 1981 Discontinued part		1	
(6)	928 628 326 01	bush		1	
7	928 628 610 05	Wiper arm without: Cover cap		1	
8	477 955 427 C	wiper blade		1	
9	N 012 241 8	Spring washer		1	
10	900 114 002 02	Toothed washer		1	
(11)	900 076 025 02	Hexagon nut M 8 Discontinued part		1	
(11)	900 076 064 02	Hexagon nut M 8		1	
12	900 076 010 02	Nut Discontinued part		1	
12	900 076 010 0B	Nut		1	
12	900 076 010 03	Nut		1	
13	900 119 014 02	Socket head bolt M 6 X 20		2	

Model	Year	MG	SG	Illustration	Restrictions	UPD	7:34	27.10.2023
928	1978	9	04	904-005		738		

Pos	Part Number	Description	Remark	Qty	Model
14	N 012 007 2	spring ring A 6 Discontinued part		3	
14	900 027 004 03	spring ring A 6		3	
15	900 151 006 09	Washer		1	
16	900 076 010 02	Nut Discontinued part		1	
16	900 076 010 0B	Nut		1	
16	900 076 010 03	Nut		1	
17	928 628 622 00	Cover cap		1	
(17)	928 628 623 00	Cap for vehicles with Rear spoiler D - MJ 1981>>		2	
(17)	928 628 621 00	Cover cap for cars without Rear spoiler D - MJ 1981>>		1	928
(17)	928 628 622 00	Cover cap Wiper arm for cars without Rear spoiler D - MJ 1981>>		1	928
19	928 628 287 00	Grommet		3	
20	928 628 289 00	bush		3	
21	N 011 524 7	Washer Discontinued part		3	
21	N 011 524 27	Washer		3	
(22)	900 075 014 02	Hexagon bolt M 6 X 18 Discontinued part		3	
(22)	900 075 014 03	Hexagon bolt M 6 X 18		3	
-	928 628 903 00	Installation kit Rear window wiper also use: D - MJ 1980>>		1	
-	928 551 081 05	Cover plate for Rear window wiper D - MJ 1980>>		1	

Model	Year	MG	SG	Illustration	Restrictions	UPD	7:34	27.10.2023
928	1978	9	04	904-005		738		

Pos	Part Number	Description	Remark	Qty	Model
-	928 555 047 04	Trim Leatherette D - MJ 1980>>	lower	1	
	08/79-07/8270A	Black			
	08/79-07/8230B	blue			
	08/79-07/8240A	brown			
-	928 555 047 52	Trim Leather D - MJ 1980>>	lower	1	
	08/79-07/8270A	Black			
	08/79-07/8230B	blue			
	08/79-07/8240A	brown			

Model	Year	MG	SG	Illustration	Restrictions	UPD	7:34	27.10.2023
928	1978	9	04	904-010		738		

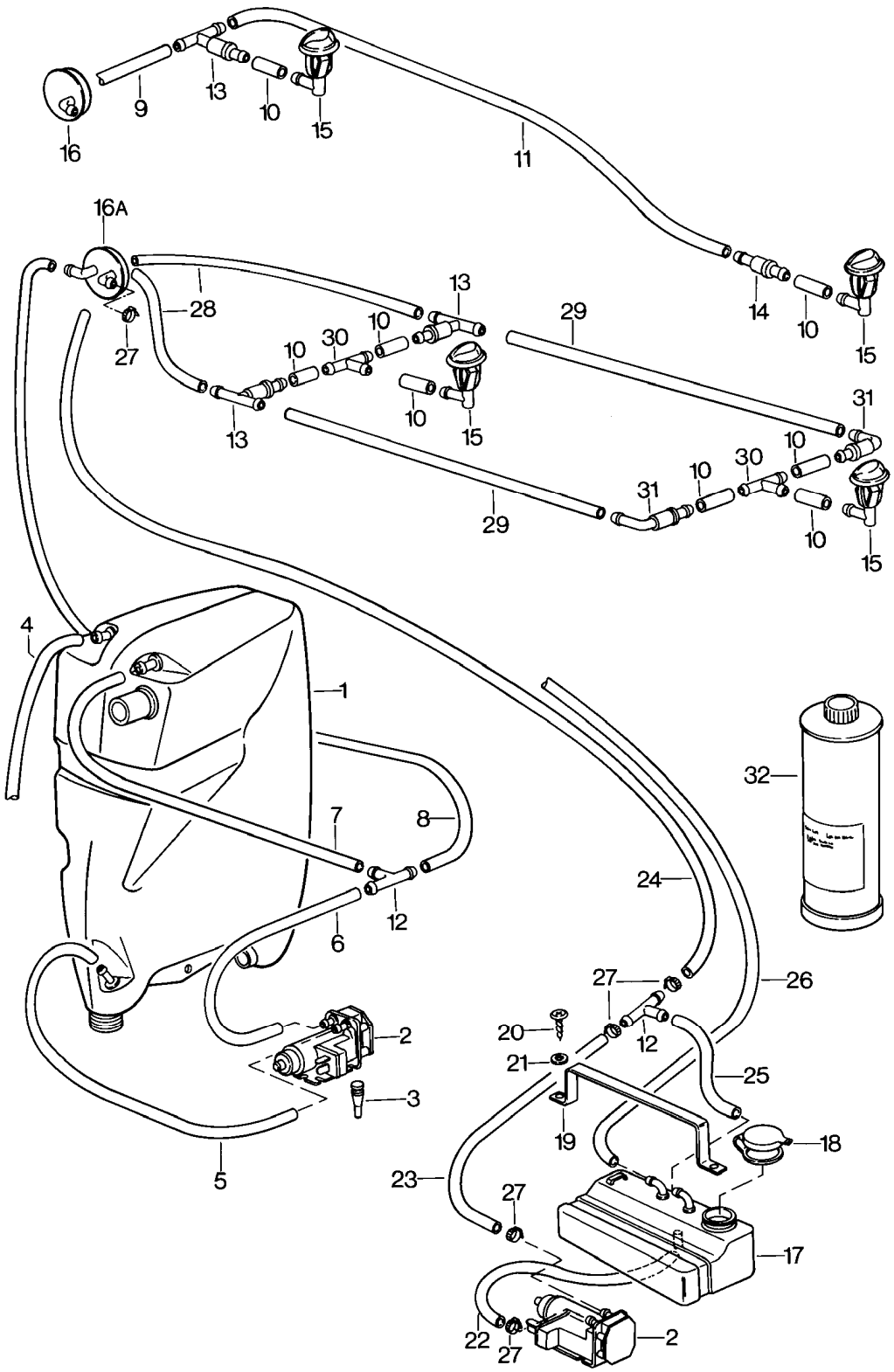

Model	Year	MG	SG	Illustration	Restrictions	UPD	7:34	27.10.2023
928	1978	9	04	904-010		738		

Pos	Part Number	Description	Remark	Qty	Model
		Windscreen washer system			
1	928 528 975 01	Fluid reservoir Discontinued part also use:	 PCG90103240	1 1	
(1)	928 528 975 01	Fluid reservoir also use:	 PCG90103240	1 1	
-	928 641 501 01	Water level switch		1	
-	928 628 735 00	Cap closure		1	
-	928 628 737 00	seal ring		1	
2	928 628 074 01	Pump also use:	 PCG90103240	2 1	
3	914 628 741 00	Bungs Pump		3	
-	999 181 029 40	Hose		*	
4		shorten to:	320 MM	1	
5		shorten to:	620 MM	1	
6		shorten to:	100 MM	1	
7		shorten to:	400 MM	1	
8		shorten to:	450 MM	1	
-		shorten to:	1170 MM	1	
9		shorten to:	160 MM	1	
10		shorten to:	25 MM	1	
11		shorten to:	650 MM	1	
12	901 628 749 20	t-piece	rhd	2	
13	914 628 433 00	Valve		3	
14	914 628 215 00	Valve		1	
15	928 628 079 00	jet		2	
16	928 528 073 03	Hose connector	lhd	1	
16	927 528 073 03	Hose connector	rhd	1	
-		with: headlight washer system			
16A	928 528 073 04	Hose connector Discontinued part	lhd	1	
16A	928 528 073 06	Hose connector	lhd	1	

Model	Year	MG	SG	Illustration	Restrictions	UPD	7:34	27.10.2023
928	1978	9	04	904-010		738		

Pos	Part Number	Description	Remark	Qty	Model
16A	927 528 073 04	Hose connector	rhd	1	
17	928 628 091 00	container also use:	 00004400093	1 1	
18	928 528 183 03	End cap		1	
19	928 628 189 00	tensioning strap		1	
20	900 143 031 02	oval head panel screw 4,2 X 9,5		2	
21	900 025 002 02	Washer Discontinued part		2	
21	900 025 002 03	Washer		2	
-	999 181 722 40	Hose 4,6 X 1,8	Running meter	*	
22		shorten to:	145 MM	1	
23		shorten to:	300 MM	1	
24		shorten to:	1860 MM	1	
25		shorten to:	250 MM	1	
26		shorten to:	1060 MM	1	
26		shorten to:	2260 MM	1	
27	999 512 069 02	Hose clamp Discontinued part		5	
27	PCG 512 069 02	Hose clamp		5	
-	999 181 029 40	Hose 140 MM 650 MM		* 2 2	
30	901 628 745 20	t-piece		2	
31	477 955 481	Valve		2	
32	928 628 931 00	Silicone remover 1000 CCM Discontinued part		X	
32	000 044 000 93	Silicone remover 1000 CCM		X	
(32)	PCG 901 032 40	Window cleaning solution Windscreen washer system	250ml	1	
-		Fasteners Pump			
-	927 628 471 00	Bracket		1	
-	901 511 791 21	Rubber washer		2	

Model	Year	MG	SG	Illustration	Restrictions	UPD	7:34	27.10.2023
928	1978	9	04	904-010		738		

Pos	Part Number	Description	Remark	Qty	Model
-	999 507 240 00	panel nut		2	
-	N 020 301 1	hose in coils of 10m 'order unit 10' Discontinued part		2	
-	PCG 020 301 10	Hose 4 X 1 3000 MM		1	
-	900 025 002 02	Washer Discontinued part		2	
-	900 025 002 03	Washer		2	
-	900 187 013 02	hexagon head panel screw 4,2 X 13		2	
-	928 628 757 00	Grommet		1	

Model	Year	MG	SG	Illustration	Restrictions	UPD	7:34	27.10.2023
928	1978	9	04	904-015		738		

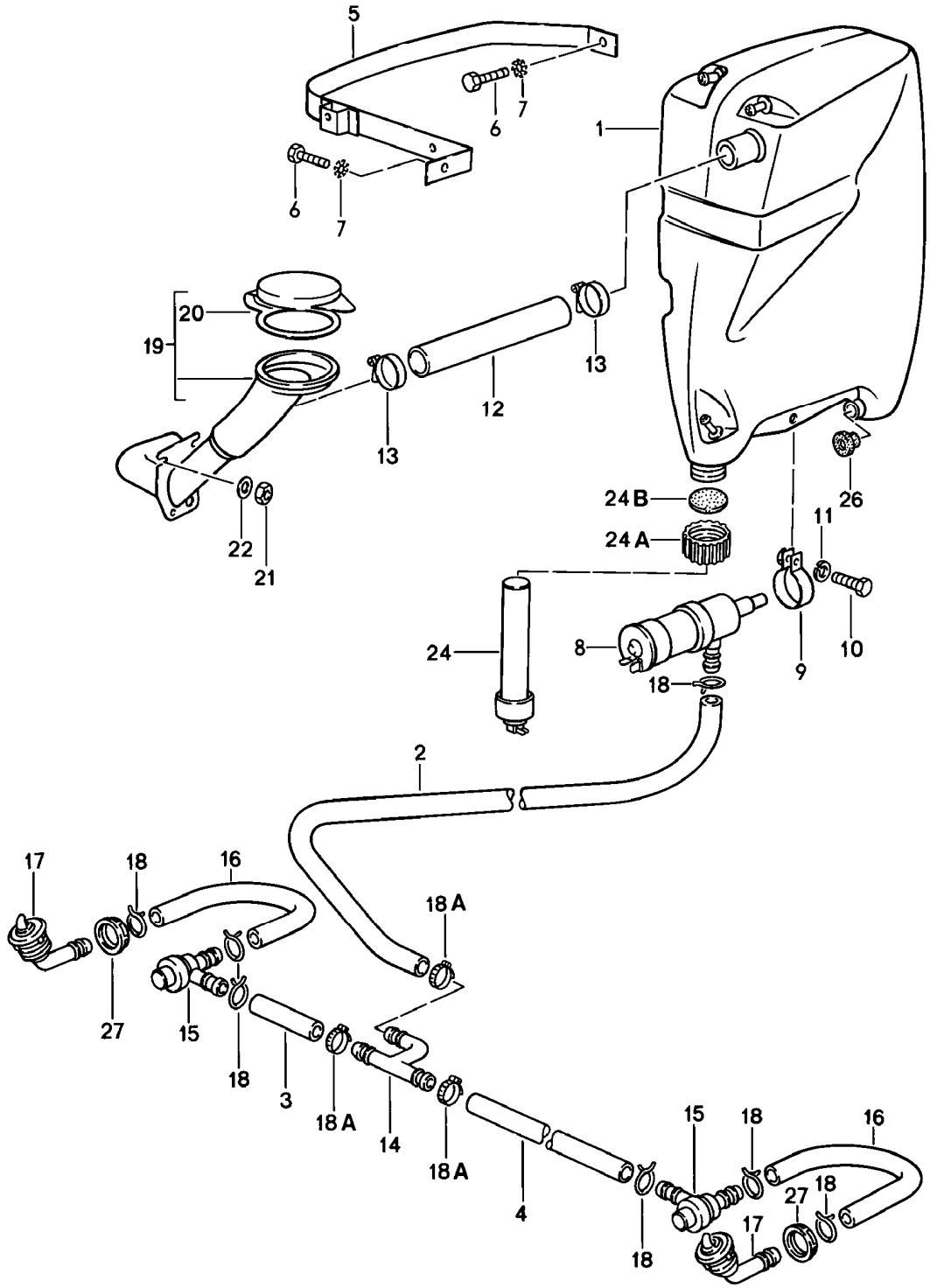

Model	Year	MG	SG	Illustration	Restrictions	UPD	7:34	27.10.2023
928	1978	9	04	904-015		738		

Pos	Part Number	Description	Remark	Qty	Model
		headlight washer system			
1	928 628 075 03	Fluid reservoir Discontinued part		1	
(1)	928 528 975 01	Fluid reservoir		1	
2	928 628 743 00	Pressure hose		1	
3	928 628 743 02	Hose Discontinued part		1	
(3)	999 181 806 40	Hose 225 MM		*	
4	928 628 743 01	Hose		1	
5	928 628 087 00	tensioning strap		1	
6	900 075 085 02	Hexagon bolt M 8 X 20		2	
7	900 115 004 01	Serrated washer		2	
8	191 955 681	Windscreen washer system pump also use:	 PCG90103240	1 1	
9	928 628 085 00	tensioning strap		1	
10	900 075 014 02	Hexagon bolt M 6 X 18 Discontinued part		1	
10	900 075 014 03	Hexagon bolt M 6 X 18		1	
11	N 011 524 7	Washer Discontinued part		1	
11	N 011 524 27	Washer		1	
12	999 181 286 50	Hose 270 MM Discontinued part		*	
12	PCG 181 286 50	Hose 270 MM		*	
13	999 512 272 02	Hose clamp		2	
14	914 628 413 10	Distributor		1	
(15)	477 955 183	Pressure switch valve		2	
16	928 528 161 02	Hose C 9 X 15		2	
17	928 528 071 02	Nozzle holder		2	
18	999 512 304 02	Hose clip		7	

Model	Year	MG	SG	Illustration	Restrictions	UPD	7:34	27.10.2023
928	1978	9	04	904-015		738		

Pos	Part Number	Description	Remark	Qty	Model
18A	N 023 569 2	Hose clamp Discontinued part		3	
18A	PCG 023 569 2	Hose clamp		3	
19	928 628 179 00	fuel filler neck	lhd	1	
(19)	927 528 085 02	fuel filler neck	rhd	1	
20	928 528 181 02	End cap		1	
21	900 076 010 02	Nut Discontinued part		2	
21	900 076 010 0B	Nut		2	
21	900 076 010 03	Nut		2	
22	900 151 003 02	Washer Discontinued part		2	
22	900 151 006 03	Washer		2	
24	928 641 501 01	Water level switch		1	
24A	928 628 735 00	Cap closure		1	
24B	928 628 737 00	seal ring		1	
26	928 628 193 00	Seal		1	
27	900 281 002 40	Hexagon nut		2	
-	927 612 463 00	Cable support sleeve		1	
-	927 528 181 02	Filler hose	rhd	1	
-	927 528 179 02	Bracket fuel filler neck	rhd	1	
-	999 512 084 02	Hose clamp	rhd	1	
-	999 512 084 02	Hose clamp	lhd	2	

Model	Year	MG	SG	Illustration	Restrictions	UPD	7:34	27.10.2023
928	1978	9	05	905-000		738		

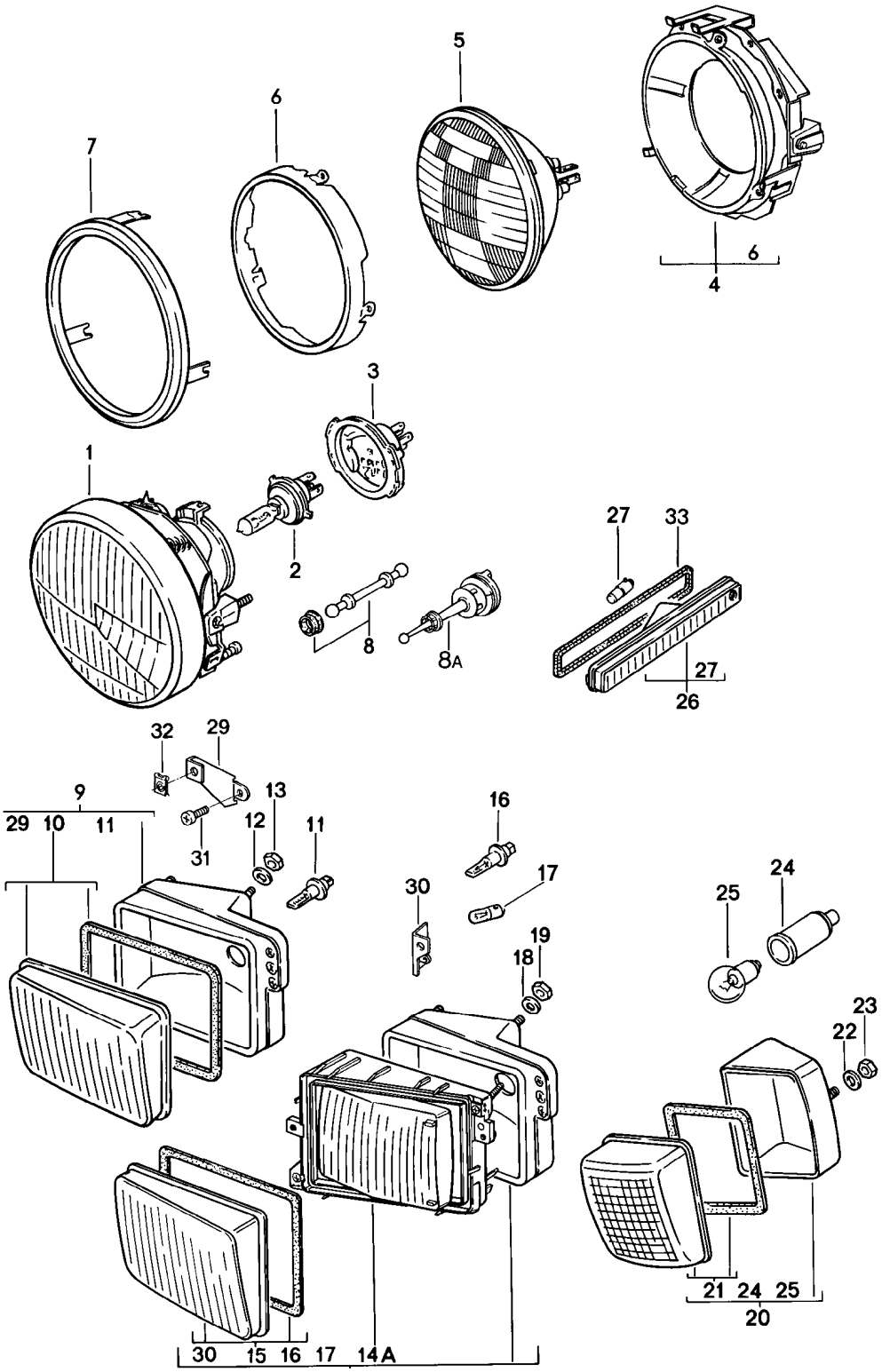

Model	Year	MG	SG	Illustration	Restrictions	UPD	7:34	27.10.2023
928	1978	9	05	905-000		738		

Pos	Part Number	Description	Remark	Qty	Model
		Headlights Turn signal indicator Not for: USA,CDN	front		
1	928 631 101 03	Headlights H 4	lhd	2	
(1)	928 631 102 01	Headlights H 4	rhd	2	PR:492
2	999 631 202 90	bulb H 4		2	
(2)	999 631 202 91	Halogen bulb H 4		2	"F.."
3	928 631 923 00	Protective hood		2	
8	928 631 203 02	Pin F >> 92-89102 996 F >> 92-89209 622		2	
(8)	928 631 203 03	Pin F 92-89102 997>> F 92-89209 623>>		2	
8A	928 631 201 02	Retaining bracket		2	
9	928 631 414 01	Halogen main beam headlight	left	1	
(9)	928 631 414 00	Halogen main beam headlight	right	1	
(9)	928 631 415 01	Halogen main beam headlight	left	1	"F.."
(9)	928 631 415 00	Halogen main beam headlight	right	1	"F.."
10	928 631 927 00	Diffusor lens without: Rubber seal Fasteners	left	1	
(10)	928 631 928 00	Diffusor lens without: Rubber seal Fasteners	right	1	
(-)	PCG 631 927 00	1 set attachment parts Rubber seal for Diffusor lens		1	
(10)	928 631 927 02	Diffusor lens Rubber seal Fasteners	left	1	"F.."
(10)	928 631 928 02	Diffusor lens Rubber seal Fasteners	right	1	"F.."

Model	Year	MG	SG	Illustration	Restrictions	UPD	7:34	27.10.2023
928	1978	9	05	905-000		738		

Pos	Part Number	Description	Remark	Qty	Model
11	900 631 126 90	Halogen bulb H 3, 12 V - 55 W		2	
12	900 151 027 02	Washer Discontinued part		8	
12	900 151 027 03	Washer		8	
13	900 910 009 02	Locknut		8	
13	900 084 026 01	Locknut		8	
14	928 631 416 01	Fog lights	left	1	
(14)	928 631 416 00	Fog lights	right	1	
(14)	928 631 418 01	Fog lights	left	1	"F..","E.."
(14)	928 631 418 00	Fog lights	right	1	"F..","E.."
14A	928 631 947 00	Retaining frame with: Diffusor lens	inner	2	
15	928 631 925 00	Diffusor lens without: Rubber seal Fasteners	left	1	
(15)	928 631 926 00	Diffusor lens without: Rubber seal Fasteners	right	1	
15	PCG 631 927 00	1 set attachment parts Rubber seal for LICHTSCHEIBE		1	
(15)	928 631 925 02	Diffusor lens Rubber seal Fasteners	left	1	"F.."
(15)	928 631 926 02	Diffusor lens Rubber seal Fasteners	right	1	"F.."
16	900 631 126 90	Halogen bulb H 3, 12 V - 55 W		2	
17	900 631 103 90	bulb 12 V - 4 W		2	
18	900 151 027 02	Washer Discontinued part		8	
18	900 151 027 03	Washer		8	
19	900 910 009 02	Locknut		8	
19	900 084 026 01	Locknut		8	

Model	Year	MG	SG	Illustration	Restrictions	UPD	7:34	27.10.2023
928	1978	9	05	905-000		738		

Pos	Part Number	Description	Remark	Qty	Model
20	928 631 421 01	Turn signal indicator	left	1	
(20)	928 631 421 00	Turn signal indicator	right	1	
21	928 631 929 00	Diffusor lens Rubber seal Fasteners	left	1	
21	928 631 930 00	Diffusor lens Rubber seal Fasteners	right	1	
22	900 151 027 02	Washer Discontinued part		4	
22	900 151 027 03	Washer		4	
23	900 910 009 02	Locknut		4	
23	900 084 026 01	Locknut		4	
24	311 971 867 A	Grommet		2	
25	900 631 127 90	bulb 12 V - 21 W		2	
26	928 631 410 01	Turn signal repeater Discontinued part		2	
26	928 631 410 02	Turn signal repeater Discontinued part		2	
26	928 631 410 03	Turn signal repeater		2	
-	999 507 252 02	Nut		2	
27	900 631 103 90	bulb 12 V - 4 W		2	
29	928 631 435 00	Bracket		2	
(30)	928 631 437 01	Bracket		2	
31	N 014 133 8	fillister hd. bolt M 5 X 12 Discontinued part		4	
31	N 014 133 I	fillister hd. bolt M 5 X 12		4	
32	999 591 338 02	panel nut		4	
32	999 591 460 01	panel nut		4	
33	928 631 448 00	Seal		2	
33	928 631 448 02	Seal		2	
-		Headlight range control See main group 8 8/06/00			

Model	Year	MG	SG	Illustration	Restrictions	UPD	7:34	27.10.2023
928	1978	9	05	905-010		738		

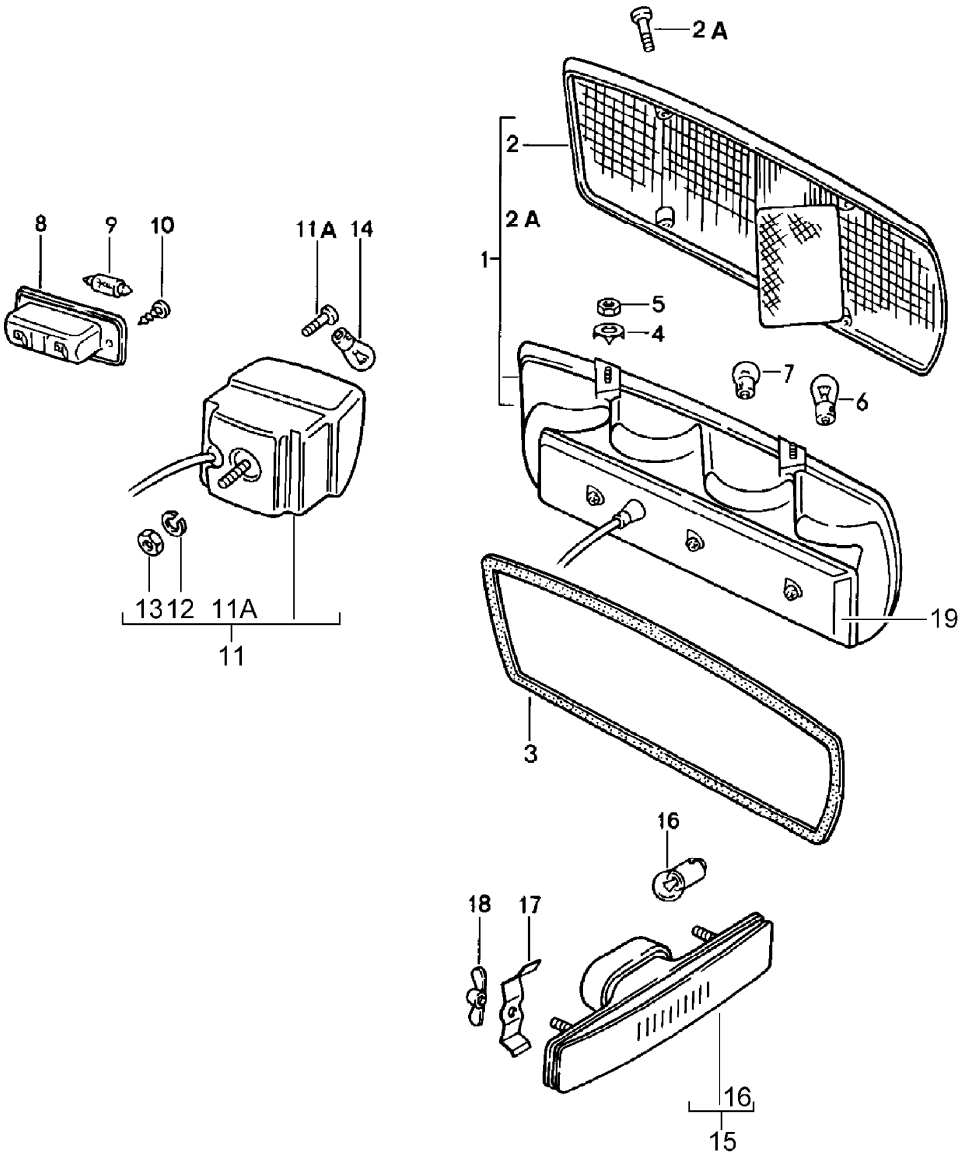

Model	Year	MG	SG	Illustration	Restrictions	UPD	7:35	27.10.2023
928	1978	9	05	905-010		738		

Pos	Part Number	Description	Remark	Qty	Model
		Rear light			
1	928 631 931 02	Rear light	left	1	
(1)	928 631 932 02	Rear light	right	1	
2	928 631 933 02	Diffusor lens	left	1	
(2)	928 631 934 02	Diffusor lens	right	1	
2A	928 631 941 00	Screw Rear light		8	
4	928 631 439 00	Washer		8	
5	900 910 009 02	Locknut		8	
5	900 084 026 01	Locknut		8	
6	900 631 127 90	bulb 12 V - 21 W		2	
6	999 631 114 90	bulb 12 V - 32 CP		6	
7	900 631 115 90	bulb 12 V - 10 W		2	
8	928 631 620 00	Licence plate light	rear	2	
9	900 631 105 90	bulb 12 V - 5 W		2	
10	900 145 044 07	panel screw B 4,2 X 22		4	
11	928 631 935 02	Rear fog light Discontinued part	left	1	
(11)	928 631 935 02	Rear fog light	left	1	
(11)	928 631 936 02	Rear fog light Discontinued part	right	1	
(11)	928 631 936 02	Rear fog light	right	1	
11A	928 631 943 00	Screw		4	
12	N 012 006 4	spring ring B 6		2	
13	900 076 010 02	Nut M 6 Discontinued part		2	
13	900 076 010 0B	Nut M 6		2	
13	900 076 010 03	Nut M 6		2	

Model	Year	MG	SG	Illustration	Restrictions	UPD	7:35	27.10.2023
928	1978	9	05	905-010		738		

Pos	Part Number	Description	Remark	Qty	Model
14	900 631 127 90	bulb 12 V - 21 W		2	
-	113 971 935 D	push-on connector D >> - MJ 1980		1	
19	PCG 631 931 02	Cover with: Wire set for Rear light	left a. right	1	

Model	Year	MG	SG	Illustration	Restrictions	UPD	7:35	27.10.2023
928	1978	9	05	905-012		738		

1

2

Model	Year	MG	SG	Illustration	Restrictions	UPD	7:35	27.10.2023
928	1978	9	05	905-012		738		

Pos	Part Number	Description	Remark	Qty	Model
		Lamp replacement box **Porsche Classic**			
(1)	**PCG 928 100 01**	**Lamp replacement box**	**928** **78-95**	**1**	

Model	Year	MG	SG	Illustration	Restrictions	UPD	7:35	27.10.2023
928	1978	9	05	905-015		738		

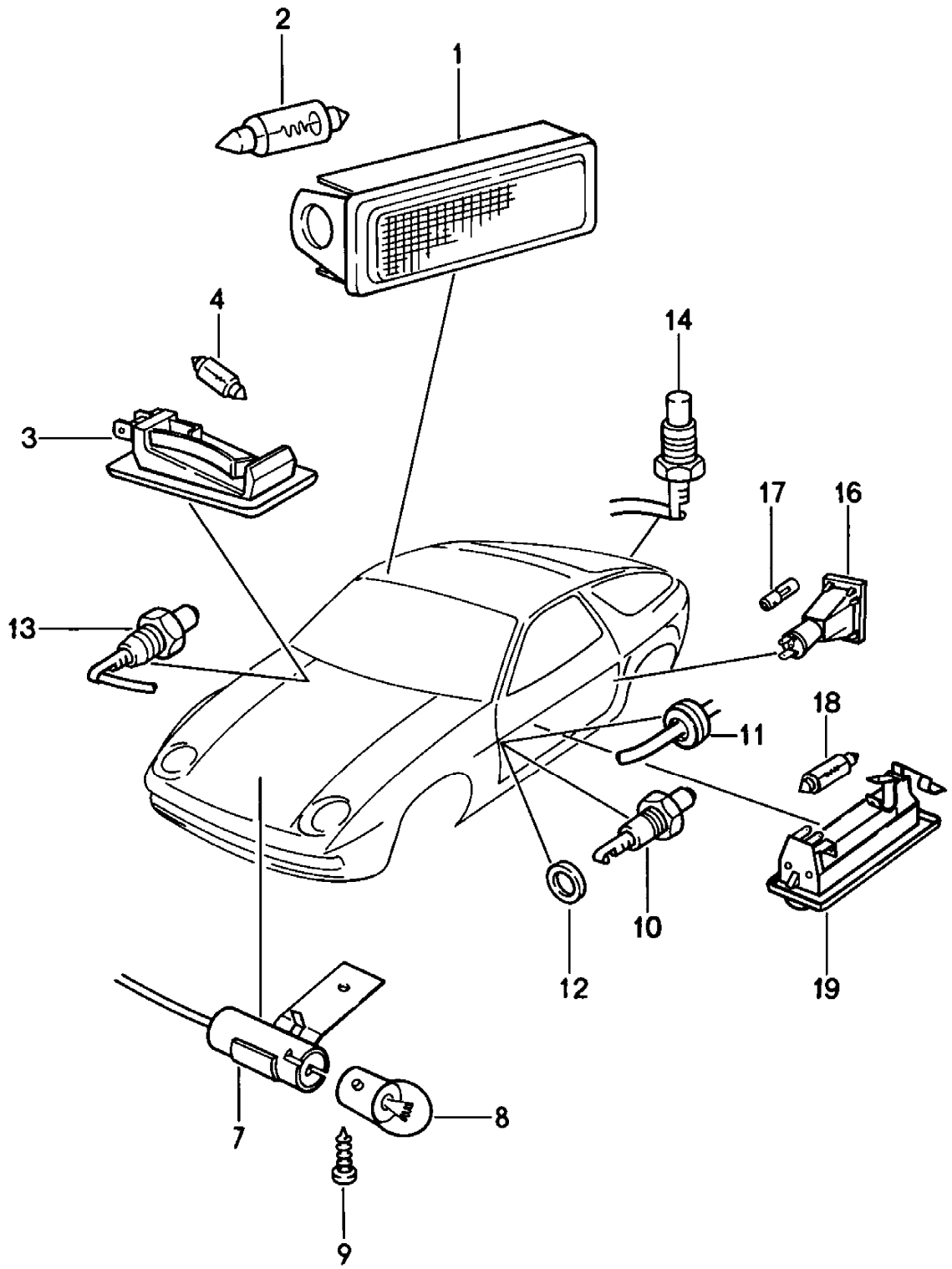

Model	Year	MG	SG	Illustration	Restrictions	UPD	7:35	27.10.2023
928	1978	9	05	905-015		738		

Pos	Part Number	Description	Remark	Qty	Model
		Interior lighting			
1	911 632 102 00	Light		3	
2	900 631 106 90	bulb 12 V - 10 W		3	
3	928 632 101 00	Glove box light		1	
4	999 631 018 90	bulb		1	
7	928 632 105 00	Engine compartment light		1	
8	900 631 115 90	bulb 12 V - 10 W		1	
9	N 013 970 5	oval head panel screw B 4,2 X 9,5		1	
9	N 106 568 02	oval head panel screw B 4,8 X 9,5		1	
10	964 613 601 00	door contact switch		2	
11	321 971 905	Rubber grommet		2	
12	900 031 001 60	Washer		2	
13	964 613 601 00	door contact switch Glove box		1	
14	928 613 119 00	door contact switch Rear lid		1	
16	928 631 131 00	Door warning light D - MJ 1980>>		2	
17	900 631 120 90	bulb 12 V - 2 W D - MJ 1980>>		2	
18	928 632 109 01	Light D - MJ 1980>> Discontinued part		2	
18	823 947 105 B	interior light D - MJ 1980>>		2	
(19)	900 631 106 90	bulb 12 V - 10 W D - MJ 1980>>		1	

Model	Year	MG	SG	Illustration	Restrictions	UPD	7:35	27.10.2023
928	1978	9	06	906-000		738		

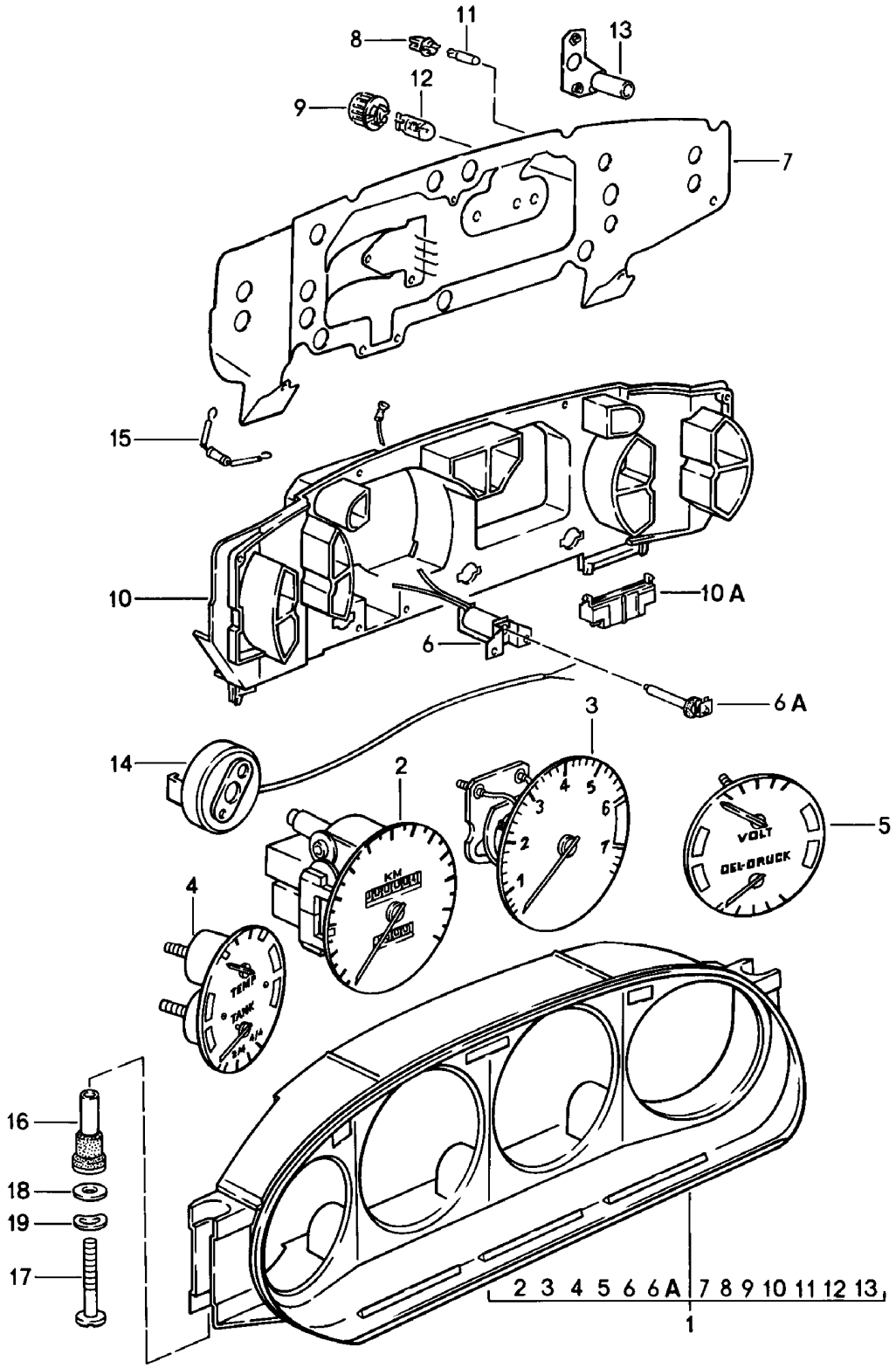

Model	Year	MG	SG	Illustration	Restrictions	UPD	7:35	27.10.2023
928	1978	9	06	906-000		738		

Pos	Part Number	Description	Remark	Qty	Model
		Combi-instrument			
1	928 641 114 30	Combi-instrument D >> - MJ 1978		1	"AUS","CDN"
2	928 641 901 00	speedometer		1	
2	928 641 901 X	speedometer		1	
3	928 641 907 00	revolution counter		1	
4	928 641 913 00	Fuel gauge and coolant temperature display		1	
5	928 641 919 00	Display unit for Volts and oil pressure		1	
(1)	928 641 101 30	Combi-instrument D >> - MJ 1978		1	
(2)	928 641 901 00	speedometer		1	
(2)	928 641 901 X	speedometer		1	
(3)	928 641 907 00	revolution counter		1	
(4)	928 641 909 00	Fuel gauge and coolant temperature display		1	
(5)	928 641 915 00	Display unit for Volts and oil pressure		1	
(1)	928 641 111 30	Combi-instrument D >> - MJ 1978		1	"GB."
(2)	928 641 903 00	speedometer		1	
(3)	928 641 907 00	revolution counter		1	
(4)	928 641 913 00	Fuel gauge and coolant temperature display		1	
(5)	928 641 919 00	Display unit for Volts and oil pressure		1	
(1)	928 641 109 30	Combi-instrument D >> - MJ 1981		1	"AUS","CDN"
(2)	928 641 967 00	speedometer Discontinued part		1	
(2)	928 641 967 X	speedometer		1	
(3)	928 641 971 00	revolution counter		1	
(4)	928 641 943 00	Fuel gauge and coolant temperature display		1	
(5)	928 641 941 00	Display unit for Volts and oil pressure Discontinued part		1	

Model	Year	MG	SG	Illustration	Restrictions	UPD	7:35	27.10.2023
928	1978	9	06	906-000		738		

Pos	Part Number	Description	Remark	Qty	Model
(5)	928 641 955 00	Display unit for Volts and oil pressure		1	
(1)	928 641 103 30	Combi-instrument D >> - MJ 1981		1	PR:489
(2)	928 641 967 00	speedometer Discontinued part		1	
(2)	928 641 967 X	speedometer		1	
(3)	928 641 971 00	revolution counter		1	
(4)	928 641 933 00	Fuel gauge and coolant temperature display		1	
(5)	928 641 961 00	Display unit for Volts and oil pressure D >> - MJ 1980 Discontinued part		1	
(5)	928 641 961 00	Display unit for Volts and oil pressure		1	
(1)	928 641 105 30	Combi-instrument D - MJ 1979>> - MJ 1979 Discontinued part		1	"GB."
2	928 641 951 00	speedometer		1	
(3)	928 641 971 00	revolution counter		1	
(4)	928 641 943 00	Fuel gauge and coolant temperature display		1	
(5)	928 641 941 00	Display unit for Volts and oil pressure		1	
(1)	928 641 116 30	Combi-instrument D >> - MJ 1981		1	"GB."
(2)	928 641 957 00	speedometer Discontinued part		1	
(2)	928 641 957 X	speedometer		1	
(3)	928 641 971 00	revolution counter		1	
(4)	928 641 943 00	Fuel gauge and coolant temperature display		1	
(5)	928 641 941 00	Display unit for Volts and oil pressure Discontinued part		1	
(5)	928 641 955 00	Display unit for Volts and oil pressure		1	
(1)	928 641 104 30	Combi-instrument D >> - MJ 1981		1	"F.."

Model	Year	MG	SG	Illustration	Restrictions	UPD	7:35	27.10.2023
928	1978	9	06	906-000		738		

Pos	Part Number	Description	Remark	Qty	Model
(2)	928 641 967 00	speedometer Discontinued part		1	
(2)	928 641 967 X	speedometer		1	
(3)	928 641 971 00	revolution counter		1	
(4)	928 641 949 00	Fuel gauge and coolant temperature display		1	
(5)	928 641 947 00	Display unit for Volts and oil pressure D >> - MJ 1980		1	
(5)	928 641 962 00	Display unit for Volts and oil pressure D - MJ 1981>> - MJ 1981		1	
1	928 641 103 31	Combi-instrument D - MJ 1982>> - MJ 1982		1	PR:489
2	928 641 967 00	speedometer Discontinued part		1	
2	928 641 967 X	speedometer		1	
3	928 641 965 01	revolution counter		1	
4	928 641 933 00	Fuel gauge and coolant temperature display		1	
5	928 641 961 00	Display unit for Volts and oil pressure		1	
1	928 641 104 31	Combi-instrument D - MJ 1982>> - MJ 1982		1	"F.."
2	928 641 967 00	speedometer Discontinued part		1	
2	928 641 967 X	speedometer		1	
3	928 641 965 01	revolution counter		1	
4	928 641 949 00	Fuel gauge and coolant temperature display		1	
5	928 641 962 00	Display unit for Volts and oil pressure		1	
1	928 641 114 31	Combi-instrument D - MJ 1982>> - MJ 1982		1	
2	928 641 967 00	speedometer Discontinued part		1	
2	928 641 967 X	speedometer		1	
3	928 641 965 01	revolution counter		1	

Model	Year	MG	SG	Illustration	Restrictions	UPD	7:35	27.10.2023
928	1978	9	06	906-000		738		

Pos	Part Number	Description	Remark	Qty	Model
4	928 641 943 00	Fuel gauge and coolant temperature display		1	
5	928 641 963 00	Display unit for Volts and oil pressure		1	
1	928 641 116 31	Combi-instrument D - MJ 1982>> - MJ 1982		1	"GB."
2	928 641 957 00	speedometer		1	
3	928 641 965 02	revolution counter		1	
4	928 641 943 00	Fuel gauge and coolant temperature display		1	
5	928 641 963 00	Display unit for Volts and oil pressure		1	
6	928 641 921 00	Coil knob for trip recorder km/miles		1	
6A	928 641 960 00	Button for trip counter reset		1	
7	928 641 923 00	Conductor foil D >> - MJ 1978		1	
(7)	928 641 939 00	Conductor foil D >> - MJ 1981		1	
(7)	928 641 973 01	Conductor foil D - MJ 1982>> - MJ 1982		1	
8	999 631 301 90	bulb (1,2 WATT)		X	
9	928 641 927 00	Bulb holder (3,0 W)		4	
9	928 641 927 01	Bulb holder (3,0 W)		4	
10	928 641 929 00	basic plate D >> - MJ 1978		1	
(10)	928 641 953 00	basic plate D >> - MJ 1981		1	
(10)	928 641 968 00	basic plate fuel consumption gauge D - MJ 1982>> - MJ 1982		1	
10A	928 641 977 00	Guide Connector: Combi-instrument without: fuel consumption gauge		3	

Model	Year	MG	SG	Illustration	Restrictions	UPD	7:35	27.10.2023
928	1978	9	06	906-000		738		

Pos	Part Number	Description	Remark	Qty	Model
10A	928 641 975 00	Guide Connector: Combi-instrument with: fuel consumption gauge D - MJ 1982>> - MJ 1982		3	
11	900 631 129 90	bulb 12 V-1,2 W		19	
11	999 631 301 90	bulb 12 V-1,2 W		19	
12	900 631 019 90	Glass-base bulb 12 V-3 W		4	
13	928 641 958 00	P.C. board with: bulb temperature gauge Fuel gauge Charging control indicator		3	
(13)	928 641 959 00	P.C. board with: bulb Display unit for oil pressure		1	
14	928 606 210 00	impulse sender		1	
15	928 641 981 00	Resistor for Charging control indicator For retrofitting for Alternator 928 603 114 00 D - MJ 1982>> - MJ 1982		1	
16	928 552 049 02	spacer sleeve		4	
17	N 019 908 1	Socket head bolt with hexagon socket head M 6 X 100		2	
18	N 011 524 7	Washer A 6,4 Discontinued part		2 2	
18	N 011 524 27	Washer A 6,4		2 2	
19	N 012 226 5	Spring washer B 6		2	
-		Fasteners impulse sender Gearbox			
-	915 660 509 00	Tensioning spring		1	

Model	Year	MG	SG	Illustration	Restrictions	UPD	7:35	27.10.2023
928	1978	9	06	906-000		738		

Pos	Part Number	Description	Remark	Qty	Model
-	900 025 014 02	Washer		1	
-	900 075 010 02	Hexagon nut Discontinued part		1	
-	N 010 212 14	Hexagon bolt Discontinued part		1	
-	999 072 005 09	Hexagon nut Discontinued part		1	
-	999 072 005 01	Hexagon bolt		1	
-	999 651 158 02	Cable holder		1	
-	928 606 305 00	Retaining plate		1	
-	999 651 163 40	Push-on sleeve		1	

Model	Year	MG	SG	Illustration	Restrictions	UPD	7:36	27.10.2023
928	1978	9	06	906-005		738		

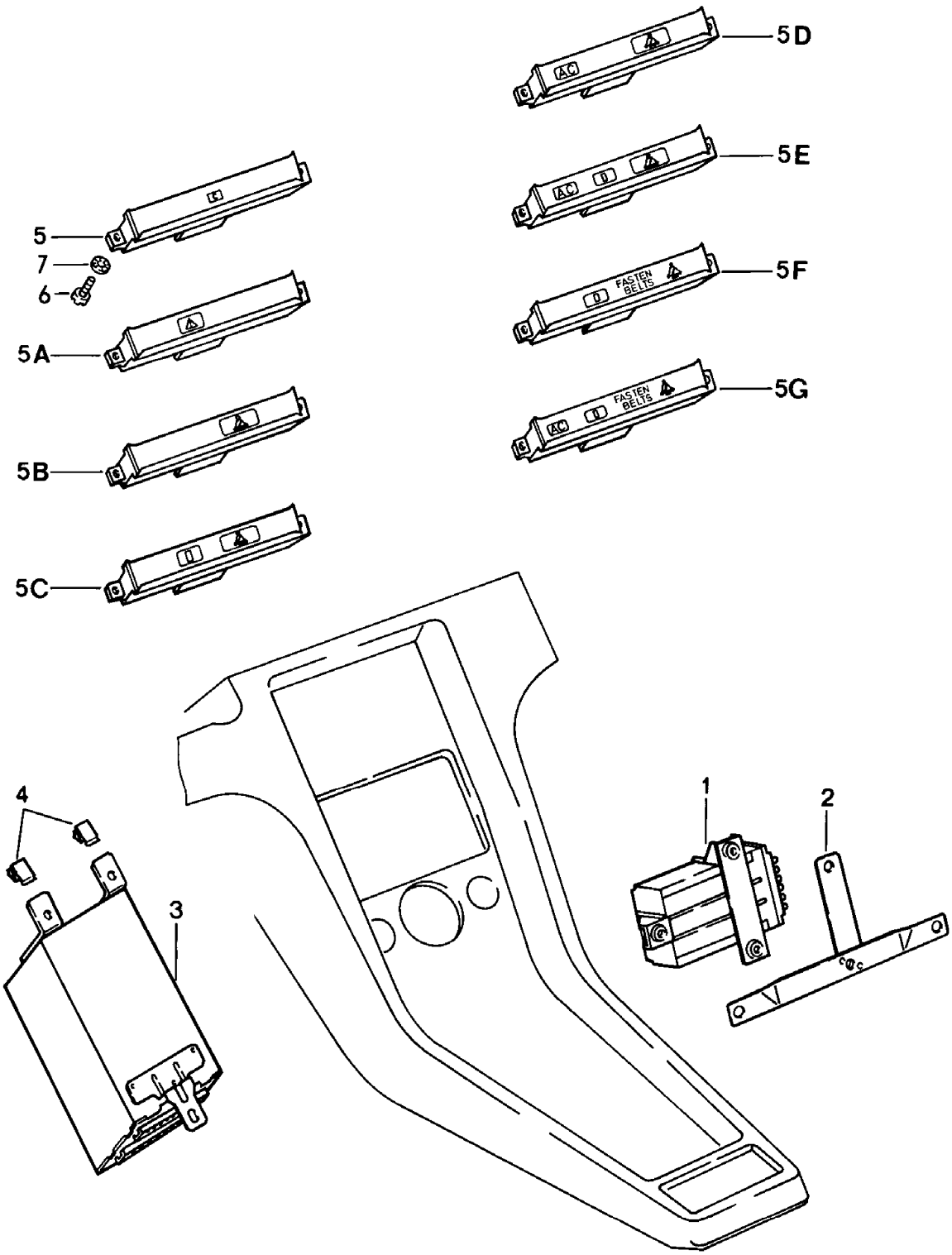

Model	Year	MG	SG	Illustration	Restrictions	UPD	7:36	27.10.2023
928	1978	9	06	906-005		738		

Pos	Part Number	Description	Remark	Qty	Model
		Central computer			
1	928 641 603 02	Control unit for headlight, brake and tail light control		1	
-	928 612 423 00	Connector housing	12 pin	1	
2	927 641 607 00	Bracket D >> - MJ 1979		1	
(2)	928 641 607 01	Bracket D - MJ 1980>>	lhd	1	
(2)	927 641 607 00	Bracket D - MJ 1980>>	rhd	1	
3	928 641 602 01	Central computer		1	
4	999 591 470 02	Cable holder	rhd	2	
5	928 641 604 00	Display unit D >> - MJ 1978		1	PR:489
(5)	928 641 605 00	Display unit D >> - MJ 1978		1	
5A	928 641 609 00	Control panel with pushbuttons D - MJ 1979>> - MJ 1979		1	
5B	928 641 609 02	Control panel with pushbuttons with: Warning light For seat belt Air conditioning D - MJ 1980>>	Automatic	1	
5C	928 641 609 03	Control panel with pushbuttons with: Warning light For seat belt with: Pushbutton for Display unit Air conditioning D - MJ 1980>>	Automatic	1	
5D	928 641 609 04	Control panel with pushbuttons with: Warning light For seat belt for vehicles with manually regulated air conditioner D >> - MJ 1981		1	PR:573

Model	Year	MG	SG	Illustration	Restrictions	UPD	7:36	27.10.2023
928	1978	9	06	906-005		738		

Pos	Part Number	Description	Remark	Qty	Model
5E	928 641 609 05	Control panel with pushbuttons with: Warning light For seat belt Pushbutton Display unit for vehicles with manually regulated air conditioner D >> - MJ 1981		1	PR:573
6	900 146 032 02	fillister hd. bolt AM 3,5 X 10		2	
7	900 114 015 01	Toothed washer		2	
-	928 641 610 00	Adapter for cars without Control unit for headlight, brake and tail light control D - MJ 1980>>		1	
-	928 641 601 01	Adapter for cars without Central computer D - MJ 1980>>		1	
-	928 641 601 01	Adapter for cars without Central computer Discontinued part		1	

Model	Year	MG	SG	Illustration	Restrictions	UPD	7:36	27.10.2023
928	1978	9	06	906-010		738		

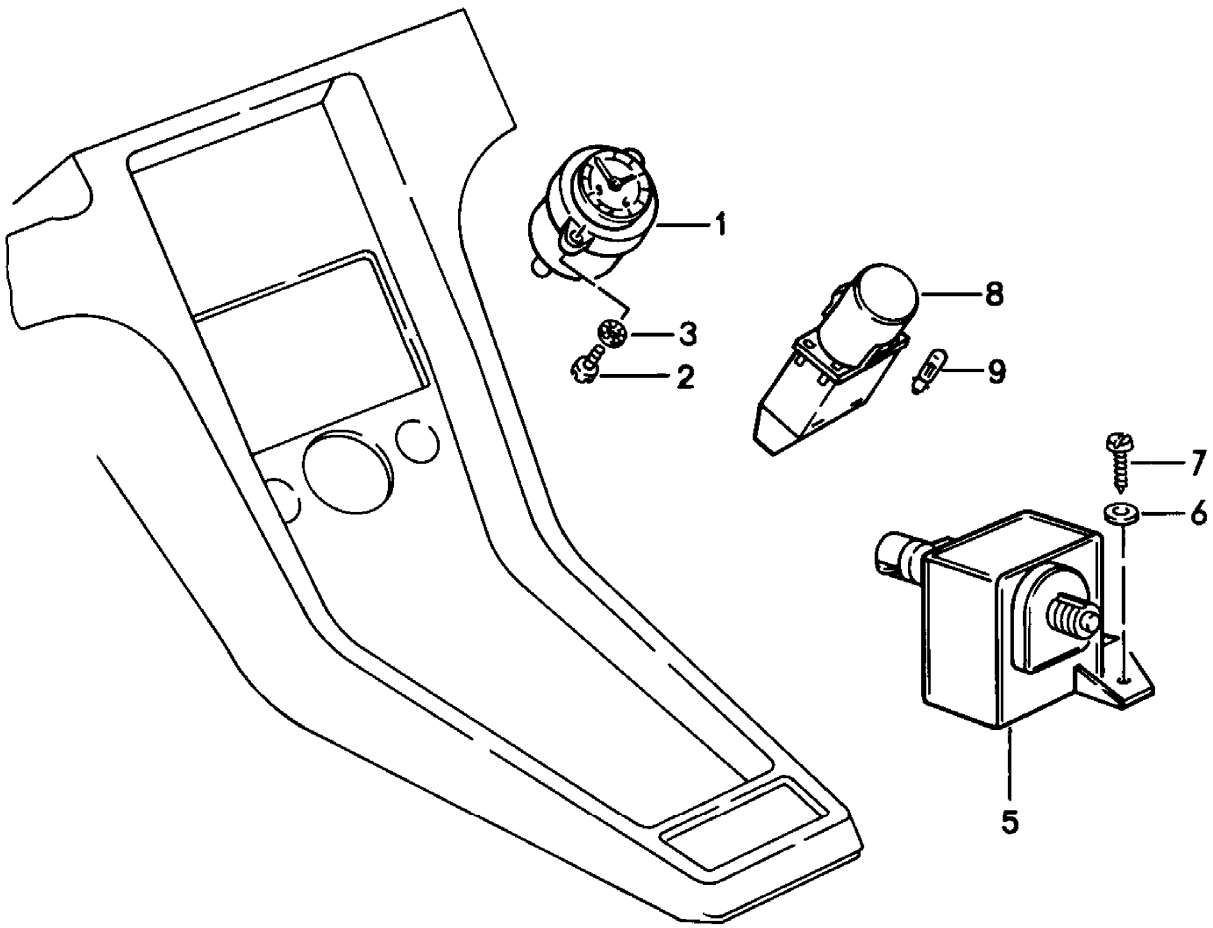

Model	Year	MG	SG	Illustration	Restrictions	UPD	7:36	27.10.2023
928	1978	9	06	906-010		738		

Pos	Part Number	Description	Remark	Qty	Model
		Combi-instrument **Centre console**			
1	**928 641 701 00**	**clock for instrument housing**		**1**	
2	**900 146 032 02**	**fillister hd. bolt** **AM 3,5 X 10**		**2**	
3	**900 114 015 01**	**Toothed washer**		**2**	
8	**928 632 013 02**	**warning lamp** **D >> - MJ 1979**	**2 point**	**1**	**PR:489**
(8)	**928 632 013 03**	**warning lamp** **D >> - MJ 1979**	**2 point**	**1**	
(8)	**928 632 013 06**	**warning lamp** **D >> - MJ 1979**	**2 point**	**1**	**"F.."**
9	**900 631 129 90**	**bulb** **12 V - 1,2 W** **D >> - MJ 1979**		**1**	

Model	Year	MG	SG	Illustration	Restrictions	UPD	7:36	27.10.2023
928	1978	9	07	907-000		738		

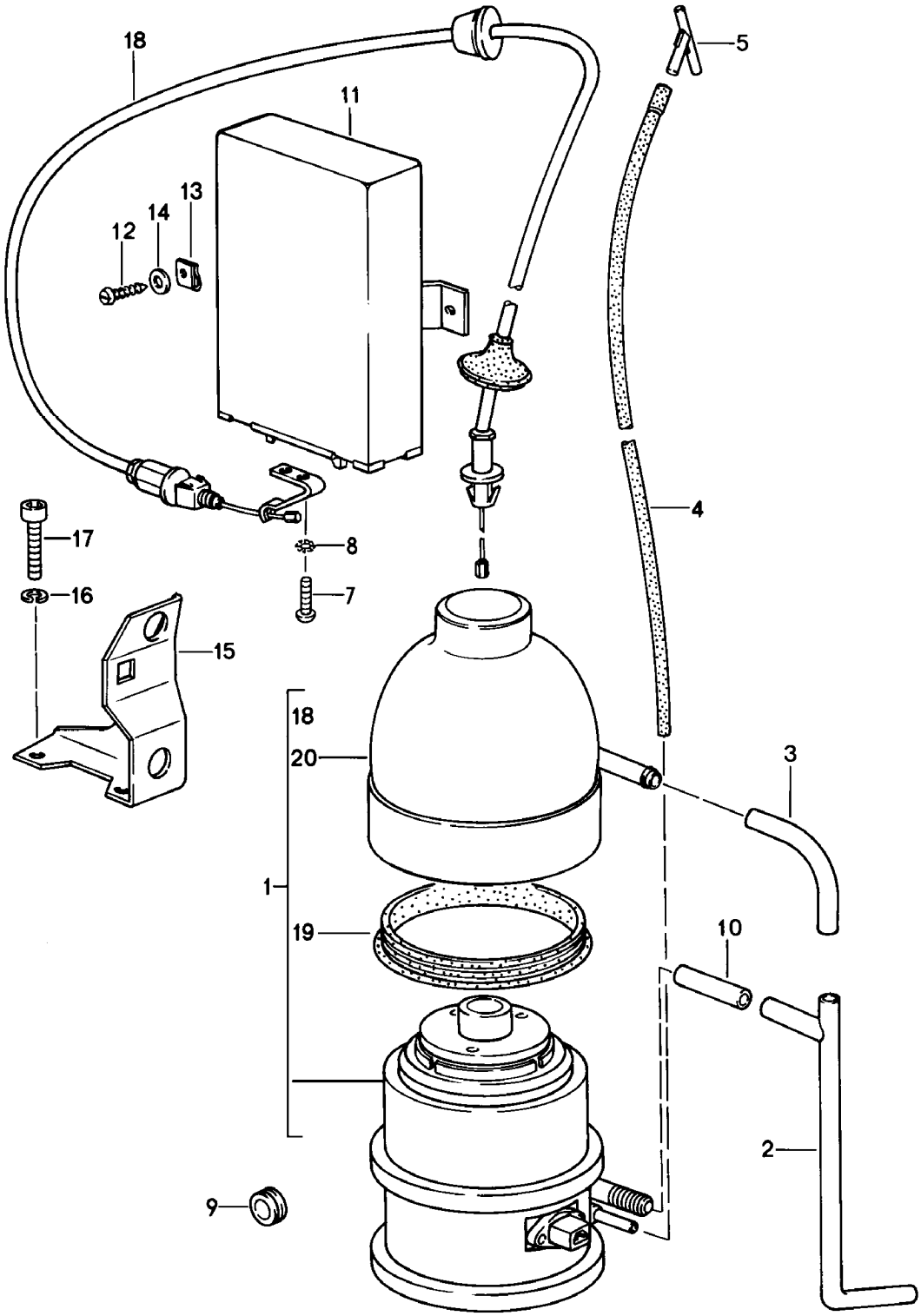

Model	Year	MG	SG	Illustration	Restrictions	UPD	7:36	27.10.2023
928	1978	9	07	907-000		738		

Pos	Part Number	Description	Remark	Qty	Model
		Cruise-control system			
1	928 617 121 00	Adjusting element Brake servo $ 9"		1	
(1)	928 617 121 01	Adjusting element Brake servo $ 10"		1	
2	928 617 124 00	Breather line		1	
3	928 617 123 00	Connection piece		1	
4	928 574 710 08	Vacuum line		1	
5	928 574 678 02	Y-piece		1	
7	900 146 005 02	fillister hd. bolt		2	
8	900 114 018 01	Toothed washer		2	
9	021 119 569 A	Rubber grommet		1	
-	N 020 359 1	Hose		*	
10		shorten to:	48 MM	1	
11	928 617 127 00	Control unit for speed control system (GRA)		1	
12	900 187 013 02	hexagon head panel screw 4,2 X 13		2	
13	N 015 429 2	Speed nut Discontinued part		2	
13	N 015 429 6	Speed nut		2	
14	900 151 001 02	Washer		2	
15	928 110 196 02	Support		1	
16	N 012 226 5	Spring washer		2	
17	N 014 740 2	Socket head bolt M 6 X 16 Discontinued part		2	
17	N 014 740 11	Socket head bolt with hexagon socket head M 6 X 16		2	
18	928 617 901 00	Bowden cable		1	
19	928 617 902 00	Seal		1	
20	928 617 903 00	Protective cap		1	

Model	Year	MG	SG	Illustration	Restrictions	UPD	7:36	27.10.2023
928	1978	9	07	907-005		738		

Model	Year	MG	SG	Illustration	Restrictions	UPD	7:36	27.10.2023
928	1978	9	07	907-005		738		

Pos	Part Number	Description	Remark	Qty	Model
		Porsche Classic Communication Management	DIN 1 Europe		928
1	911 645 590 00	Porsche Classic Communication Management without: SD memory card for navigation system with navigation data also use:	Europe 99664250100	1 1	
(1)	911 642 593 00	Porsche Classic Communication Management without: SD memory card for navigation system with navigation data	Japan	1	
2	911 645 574 00	DAB receiver		1	
3	911 645 573 00	Aerial connection line	DAB+	1	
4	911 645 513 00	Multimedia interface		1	
5	911 645 505 00	-GPS- aerial		1	
6	911 645 507 00	microphone		1	
7	911 645 593 00	Rot. knob	CLASSIC 1 pc	1	
8	911 645 595 00	Rot. knob	1 pc	1	
9	911 645 574 50	Aerial adapter plug	DIN/FAKRA	1	
10	996 642 501 00	SD memory card for navigation system with navigation data Discontinued part	Europe Q2/2019	1	
10	996 642 501 15	SD memory card for navigation system with navigation data	Europe Q2/2021	1	
(10)	996 642 501 12	SD memory card for navigation system with navigation data	Australia New Zealand Q2/2020	1	
(10)	996 642 501 14	SD memory card for navigation system with navigation data	United Arabian Emirates Q2/2020	1	
11	911 645 297 00	Retaining frame radio	DIN 1	1	
12	911 645 299 00	Connector housing (complete)	2 parts	1	

Model	Year	MG	SG	Illustration	Restrictions	UPD	7:36	27.10.2023
928	1978	9	07	907-005		738		

Pos	Part Number	Description	Remark	Qty	Model
-	911 642 209 01	Adapter Connecting line Amplifiers	BLAUPUNKT ALPINE BEA	1	
-	911 642 400 00	Adapter Loudspeaker For power supply	DIN/ISO	1	
-	993 645 413 00	Connection cable radio Amplifiers	NOKIA	1	

Model	Year	MG	SG	Illustration	Restrictions	UPD	7:37	27.10.2023
928	1978	9	98	998-000		738		

Pos	Part Number	Description	Remark	Qty	Model
		repair kits			
-	**928 603 904 00**	**1 set attachment parts** **for** **pulley** **Alternator** **928.603.114.00** **comprising:** **Nut** **SW 24** **Washer** **pressure washer** **woodruff key** **PVC-ROHR**		**X** **1** **1** **1** **1** **1**	
-		**Rear window wiper** **For retrofitting**			
-	**928 628 060 02**	**Windscreen wiper system, compl** **comprising:** **D - MJ 1980>>**	**Small**	**X**	
-	**928 628 071 03**	**Console for engine mounting** **with:** **Mounting**		**1**	
-	**928 628 202 02**	**toggle lever**		**1**	
-	**928 628 403 02**	**Wiper motor** **with:** **crank**		**1**	
-	**928 628 309 02**	**wiper bearing**	**upper**	**1**	

Model	Year	MG	SG	Illustration	Restrictions	UPD	7:37	27.10.2023
928	1978	0	01	001-000		738		

Pos	Part Number	Description	Remark	Qty	Model
		Tool first aid kit Additional accessories in the classic catalogue (Model: CLA)			
-	**928 721 011 03**	**jack Discontinued part**		**1**	
-	**000 721 711 00**	**jack Discontinued part**		**1**	
-	**000 721 711 02**	**jack Discontinued part**		**1**	
-	**000 721 710 01**	**jack Discontinued part**		**1**	
-	**000 721 710 03**	**jack**		**1**	
-	**928 551 093 02**	**Bag for vehicle jack**		**1**	
1	**928 721 005 06**	**Tool set comprising:**		**1**	
-	**928 721 012 02**	**Spark plug socket**		**1**	
-	**999 571 045 02**	**wheel bolt wrench Double open-ended spanner**		**1**	
-	**999 195 011 02**	**Double open-ended spanner 8 X 9**		**1**	
-	**999 195 012 02**	**Double open-ended spanner 10 X 11**		**1**	

Model	Year	MG	SG	Illustration	Restrictions	UPD	7:37	27.10.2023
928	1978	0	01	001-002		738		

1

2

Model	Year	MG	SG	Illustration	Restrictions	UPD	7:37	27.10.2023
928	1978	0	01	001-002		738		

Pos	Part Number	Description	Remark	Qty	Model
		tool kit bag			
1	**PCG 928 721 10**	**tool kit bag** **with:** **Tool**	**928**	**1**	
2	**911 722 202 00**	**Tyre pressure gauge** **Porsche Classic**		**1**	

PET2

PORSCHE

Model	Year	MG	SG	Illustration	Restrictions	UPD	7:37	27.10.2023
928	1978	0	01	001-003		738		

Model	Year	MG	SG	Illustration	Restrictions	UPD	7:37	27.10.2023
928	1978	0	01	001-003		738		

Pos	Part Number	Description	Remark	Qty	Model
		Polish Porsche Classic			
1	PCG 901 010 40	Care kit Pocket comprising:		1	
1	PCG 901 011 42	Care kit Porsche Classic	SCHOTTENKARO red/blue	1	
1	PCG 901 012 42	Care kit Porsche Classic	SCHOTTENKARO blue/green	1	
2	PCG 901 011 40	Microfibre cloth		1	
3	PCG 901 012 40	Polishing pad Wax Porsche inscription		1	
4	PCG 901 013 40	Modelling clay Porsche Classic		1	
5	PCG 901 014 40	Car polish Porsche Classic		1	
6	PCG 901 015 40	'Hard wax' car polish Porsche Classic		1	
7	PCG 901 020 40	Leather Towel		1	
8	PCG 901 021 40	Sponge	3-part	1	
9	PCG 901 022 40	Car shampoo		1	
10	PCG 901 023 40	Rim cleaner		1	
11	PCG 901 030 40	Polish plastic		1	
12	PCG 901 031 40	Polish Tyres		1	
13	PCG 901 032 40	Window cleaning solution Windscreen washer system	250ml	1	
-	PCG 044 000 86	Care kit Rim cleaner comprising: Rim cleaner brush		1 1 3	
15	PCG 901 016 40	Car polish anti corrosion wax Porsche Classic		1	

Model	Year	MG	SG	Illustration	Restrictions	UPD	7:38	27.10.2023
928	1978	0	01	001-004		738		

Model	Year	MG	SG	Illustration	Restrictions	UPD	7:38	27.10.2023
928	1978	0	01	001-004		738		

Pos	Part Number	Description	Remark	Qty	Model
		Accessories **Porsche Classic**			
1	**PCG 860 251 00**	**warning triangle** **Porsche Classic**		**1**	
2	**PCG 800 702 00**	**first aid kit** **Porsche Classic**		**1**	
2	**PCG 800 704 00**	**first aid kit** **Porsche Classic**	**All countries,** **except:** **USA**	**1**	
3	**PCG 701 201 00**	**Licence plate reinforcement** **Underlay** **plastic** **Porsche Classic** **520X110**		**1**	
4	**911 722 202 00**	**Tyre pressure gauge** **Porsche Classic** **with:** **Leather** **Pocket**		**1**	
5	**PCG 800 703 00**	**container** **Additional fuel tank** **inscription** **Porsche crest**	**5 ltr.** **PORSCHE**	**1**	**-"USA",** **-"CDN"**
6	**644 722 601 01**	**Hand lamp LED, battery**		**1**	

Model	Year	MG	SG	Illustration	Restrictions	UPD	7:38	27.10.2023
928	1978	0	01	001-005		738		

1

2

3

4

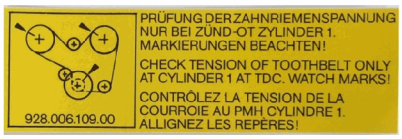

5

6

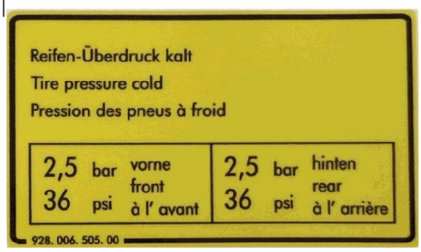

7

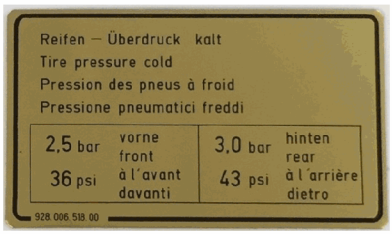

8

9

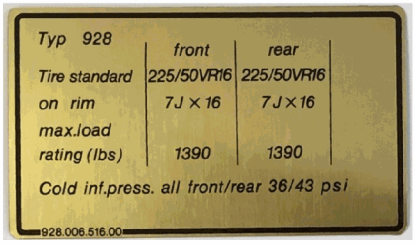

10

11

12

13

14

15

Model	Year	MG	SG	Illustration	Restrictions	UPD	7:38	27.10.2023
928	1978	0	01	001-005		738		

Pos	Part Number	Description	Remark	Qty	Model
		Signs/notices Additional accessories in the classic catalogue (Model: CLA)			
1	928 006 101 13	Sticker Engine specifications Discontinued part		1	"S.."
1	928 006 101 13	Sticker		1	928 "S.."
2	928 006 101 14	Sticker		1	928S "S.."
-	928 006 101 07	Sticker D >> - MJ 1979		1	"AUS"
3	928 006 101 16	Sticker D - MJ 1980>>		1	"AUS"
-	928 006 101 15	Sticker		1	928S "AUS"
-	928 006 109 00	Sticker toothed belt		1	
5	411 000 263 A	sticker '98 roz/ron' 98 ROZ		1	
6	928 006 505 00	Data plate for tyre pressure D >> - MJ 1979		1	
7	928 006 518 00	Data plate for tyre pressure		1	928S
8	928 006 519 00	Data plate for tyre pressure D - MJ 1980>>		1	928
-	928 006 507 00	Data plate for tyre pressure D >> - MJ 1979		1	"AUS"
9	928 006 516 00	Data plate for tyre pressure		1	928S. "AUS"
-	928 006 517 00	Data plate for tyre pressure D - MJ 1980>>		1	928. "AUS"
-	928 701 157 03	Sticker Spare wheel		1	
10	928 006 901 00	Sticker Tow hitch		1	
-	928 701 153 03	Sticker Windscreen washer system		1	

Model	Year	MG	SG	Illustration	Restrictions	UPD	7:38	27.10.2023
928	1978	0	01	001-005		738		

Pos	Part Number	Description	Remark	Qty	Model
11	928 006 103 00	sticker 'ignition timing'		1	
12	928 006 105 00	Sticker Ignition system		1	
13	964 701 163 00	Sticker Notice 'Achtung Hochspannung' 'danger high voltage' 'attention ! Haute Tension'		1	
14	928 701 151 03	Data plate Additional blower		1	PR:573
15	928 701 155 02	Data plate cover for battery		1	

Model	Year	MG	SG	Illustration	Restrictions	UPD	7:38	27.10.2023
928	1978	0	01	001-010		738		

1

2

3

Model	Year	MG	SG	Illustration	Restrictions	UPD	7:38	27.10.2023
928	1978	0	01	001-010		738		

Pos	Part Number	Description	Remark	Qty	Model
		Data tag			
1	**000 701 101 00**	**Notice** **-73**	**356, 912, 911,** **914/6**	**1**	
		also use:	**99919010130**	**2**	
2	**911 701 101 11**	**Notice** **74-80** **VIN: 10.**	**911,924,928**	**1**	
		also use:	**99919010130**	**2**	
3	**928 701 111 00**	**Notice** **81-92** **VIN: 17.**	**924,944,911,** **928**	**1**	
		also use:	**99919010130**	**2**	
-	**999 190 101 30**	**Pop rivet**	**A3,2X6,1**	**2**	

Model	Year	MG	SG	Illustration	Restrictions	UPD	7:38	27.10.2023
928	1978	0	02	002-000		738		

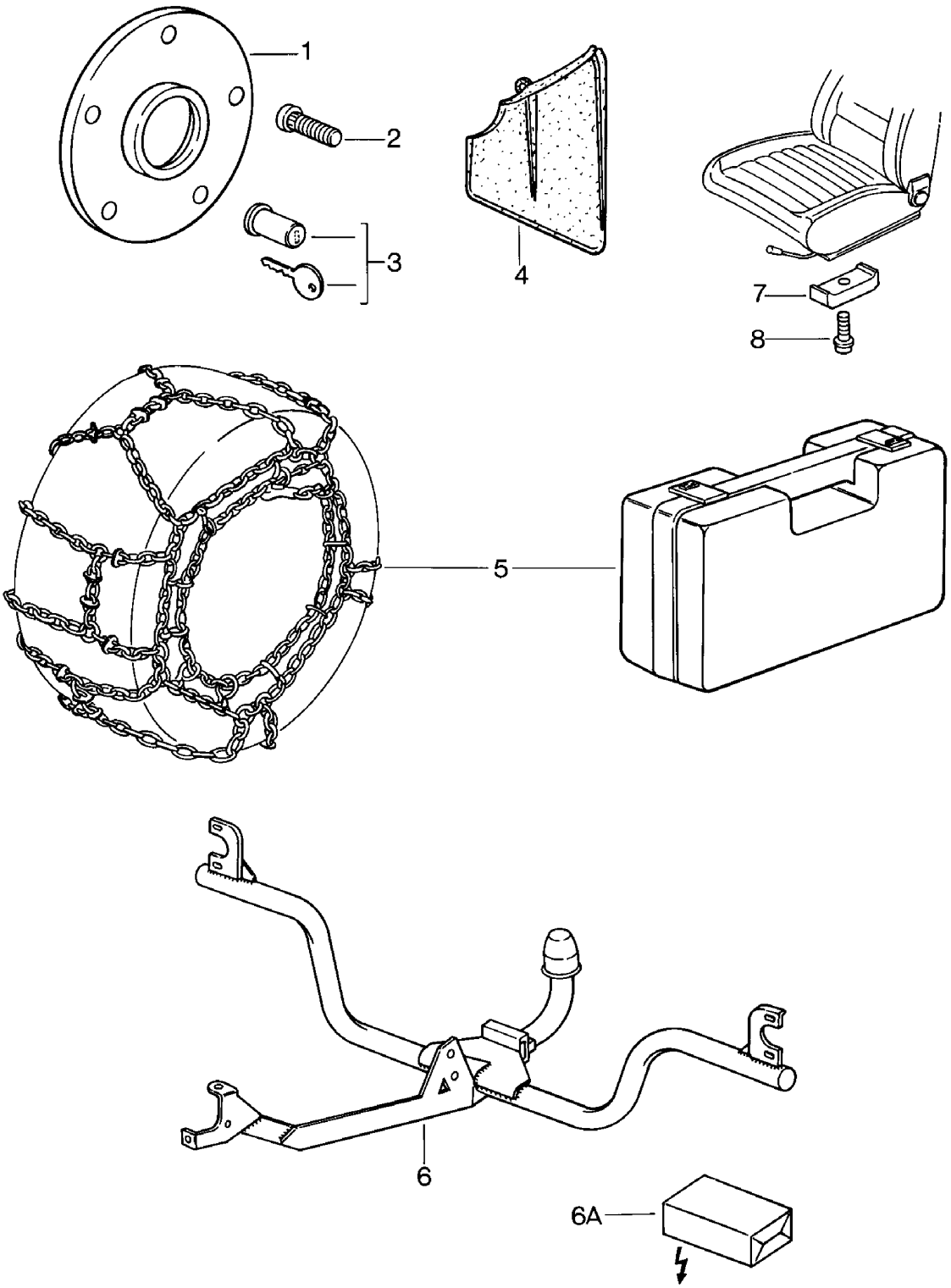

Model	Year	MG	SG	Illustration	Restrictions	UPD	7:38	27.10.2023
928	1978	0	02	002-000		738		

Pos	Part Number	Description	Remark	Qty	Model
		Accessories			
-		Distance piece Rear axle See technical information 928 GRUPPE X 5			
1	477 501 701	Spacer ring 21 MM		2	
2	901 331 671 01	wheel mounting bolt		10	
3	928 361 047 03	Wheel nut Discontinued part	lockable	1	
3	965 361 955 00	Wheel nut Discontinued part	lockable	1	
3	968 361 955 00	Wheel nut Discontinued part	lockable	1	
3	993 361 057 00	Rim coded bolt set with adapter	lockable	1	
-	928 361 310 00	Cover cap for Wheel nut		X	
-	928 361 306 03	Wheel nut without: lock	lockable	4	
4	928 559 901 02	mud flap Installation kit comprising:		1	
-	928 559 383 02	mud flap	left	1	
-	928 559 384 02	mud flap	right	1	
-	928 559 385 02	Underlay		2	
-	N 010 264 4	Hexagon bolt M 5 X 20		2	
-	900 910 008 02	Locknut M 5		2	
-	928 559 386 02	Support		1	
-	928 559 389 02	Clip		5	
(5)	911 361 909 00	1 set of snow chains 185/70 R 15 225/50 R 16		1	
-	928 801 901 02	Ski holder	lockable	1	
-	928 801 035 02	Roof carrier Surf board bracket		1	

Model	Year	MG	SG	Illustration	Restrictions	UPD	7:38	27.10.2023
928	1978	0	02	002-000		738		

Pos	Part Number	Description	Remark	Qty	Model
6	928 722 031 02	Tow hitch		1	
6A	928 612 905 00	Installation kit - electrical parts for trailer operation		1	
-	928 731 051 02	Caravan mirror	left	1	
-	928 731 052 02	Caravan mirror	right	1	
-	928 361 510 00	breakdown set with compressor		1	
-	911 722 202 00	Tyre pressure gauge Porsche Classic With leather case		1	
-		Height corrector Accelerator pedal brake pedal See main group 7 7/02/00 7/02/05			
-	928 555 631 02	Luggage net D - MJ 1980>>		1	
-	928 555 631 03	Luggage net		1	
-		Seat Height corrector 13 MM			
7	911 521 493 00	Intermediate piece		X	
8	900 067 089 02	Socket head bolt M 6 X 25 Height corrector 26 MM Discontinued part		X	
8	900 067 089 01	Socket head bolt M 6 X 25 Height corrector 26 MM		X	
(8)	N 014 749 2	Socket head bolt M 6 X 40		X	
-	944 522 051 01	child seat For children aged:	0–4 years	1	
-	928 522 050 00	child seat For children aged from: only in conj. with: padding for child seat	4 years	1	
-	928 522 159 02	padding for child seat with: inscription Porsche	left	1	
	08/77-07/824CR	Black			

Model	Year	MG	SG	Illustration	Restrictions	UPD	7:38	27.10.2023
928	1978	0	02	002-000		738		

Pos	Part Number	Description	Remark	Qty	Model
-	928 522 160 02	padding for child seat with: inscription Porsche	right	1	
	08/77-07/824CR	Black			
-	000 043 002 00	luggage basket	Folding	X	

Model	Year	MG	SG	Illustration	Restrictions	UPD	7:39	27.10.2023
928	1978	0	02	002-005		738		

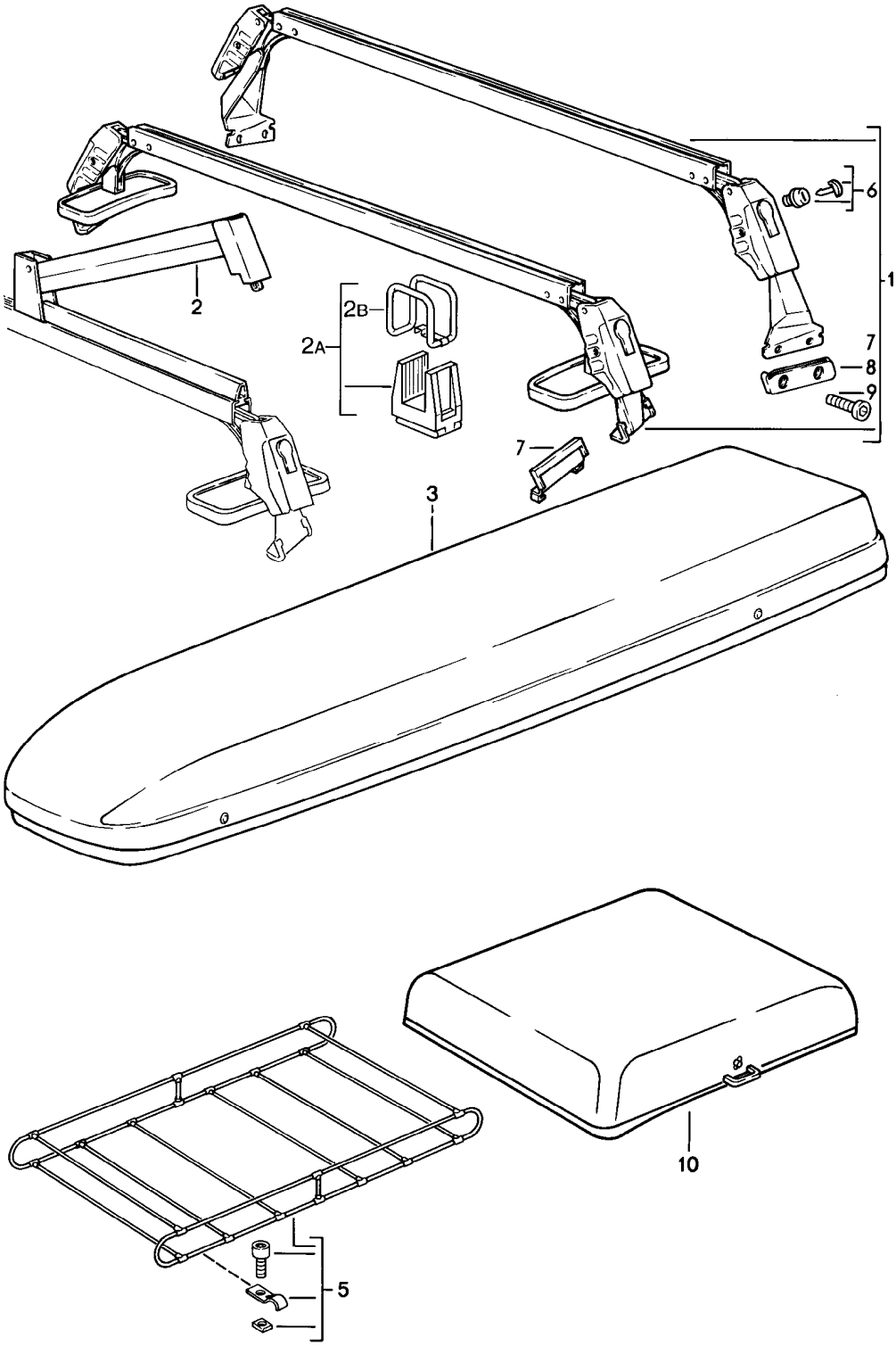

Model	Year	MG	SG	Illustration	Restrictions	UPD	7:39	27.10.2023
928	1978	0	02	002-005		738		

Pos	Part Number	Description	Remark	Qty	Model
		Transportation tool			
1	**928 801 055 02**	**1 base carrier set**		**1**	
2	**928 801 061 02**	**Retainer bracket Assembly kit**		**4**	
2A	**928 801 903 02**	**1 set: ski holder Assembly kit**		**1**	
2B	**928 801 193 02**	**Holding strap Assembly kit**		**1**	
3	**928 801 063 02**	**ski and luggage box**	**left**	**1**	
(3)	**928 801 064 02**	**ski and luggage box**	**right**	**1**	
5	**928 801 081 02**	**Roof carrier**		**1**	
6	**928 801 011 02**	**lock cylinder with keys**		**4**	
-	**928 801 271 02**	**rubber packing**	**front**	**2**	
-	**928 801 167 02**	**rubber packing**	**rear**	**2**	
-	**900 119 072 00**	**Socket head bolt M 8 X 18**		**4**	
-	**928 801 073 02**	**roof box**		**1**	

Model	Year	MG	SG	Illustration	Restrictions	UPD	7:39	27.10.2023
928	1978	0	02	002-006		738		

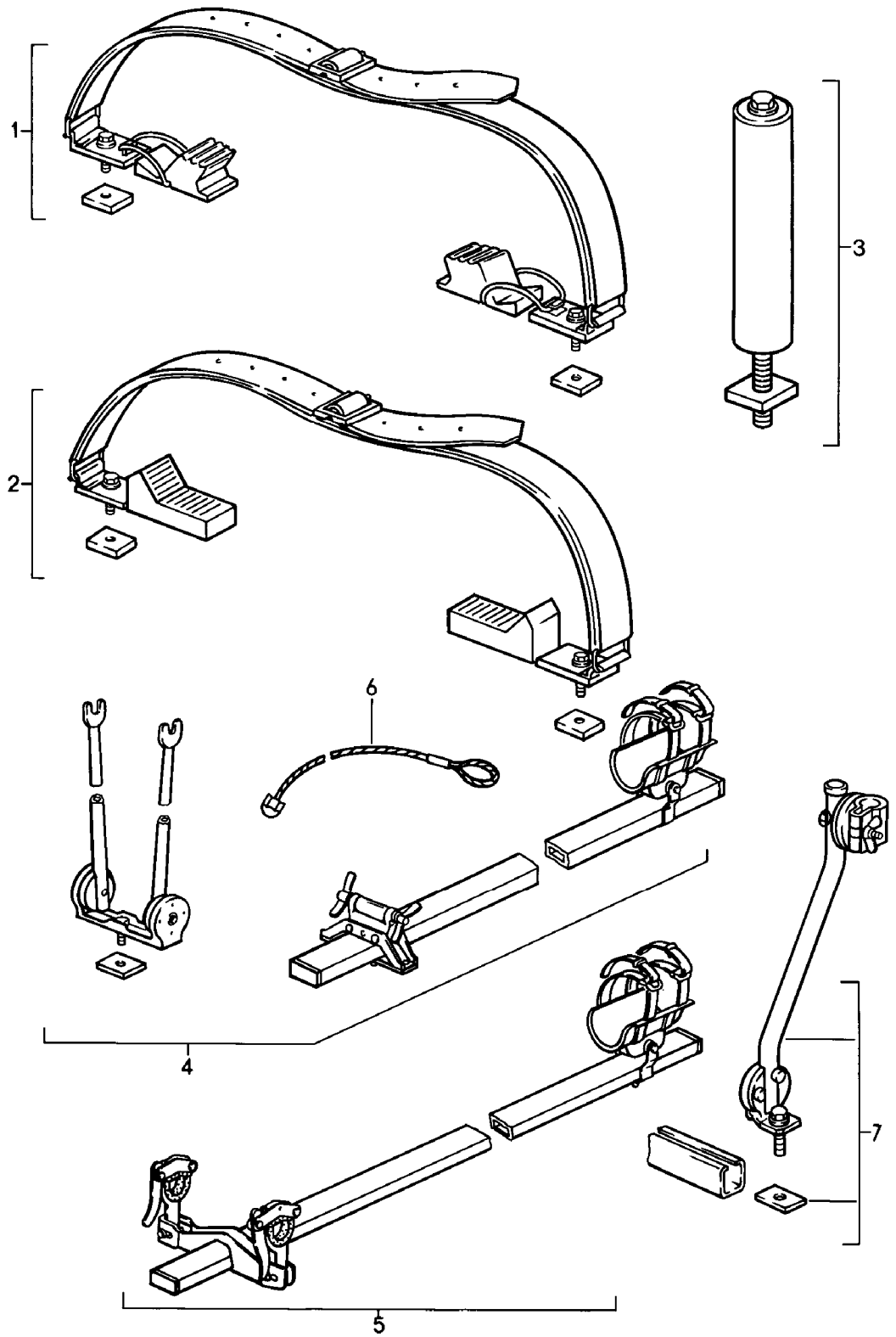

Model	Year	MG	SG	Illustration	Restrictions	UPD	7:39	27.10.2023
928	1978	0	02	002-006		738		

Pos	Part Number	Description	Remark	Qty	Model
		Roof carrier			
1	**928 801 019 02**	**Surf board bracket**		**1**	
2	**928 801 017 02**	**Kayak holder**		**1**	
3	**928 801 085 02**	**Centring pin**		**1**	
4	**928 801 093 02**	**bicycle bracket Racing bike**		**1**	
5	**928 801 095 02**	**bicycle bracket for Sport Bicycle**		**1**	
6	**928 801 079 02**	**Retaining rope**		**1**	
7	**928 801 097 02**	**Support**		**1**	

Model	Year	MG	SG	Illustration	Restrictions	UPD	7:39	27.10.2023
928	1978	0	03	003-000		738		

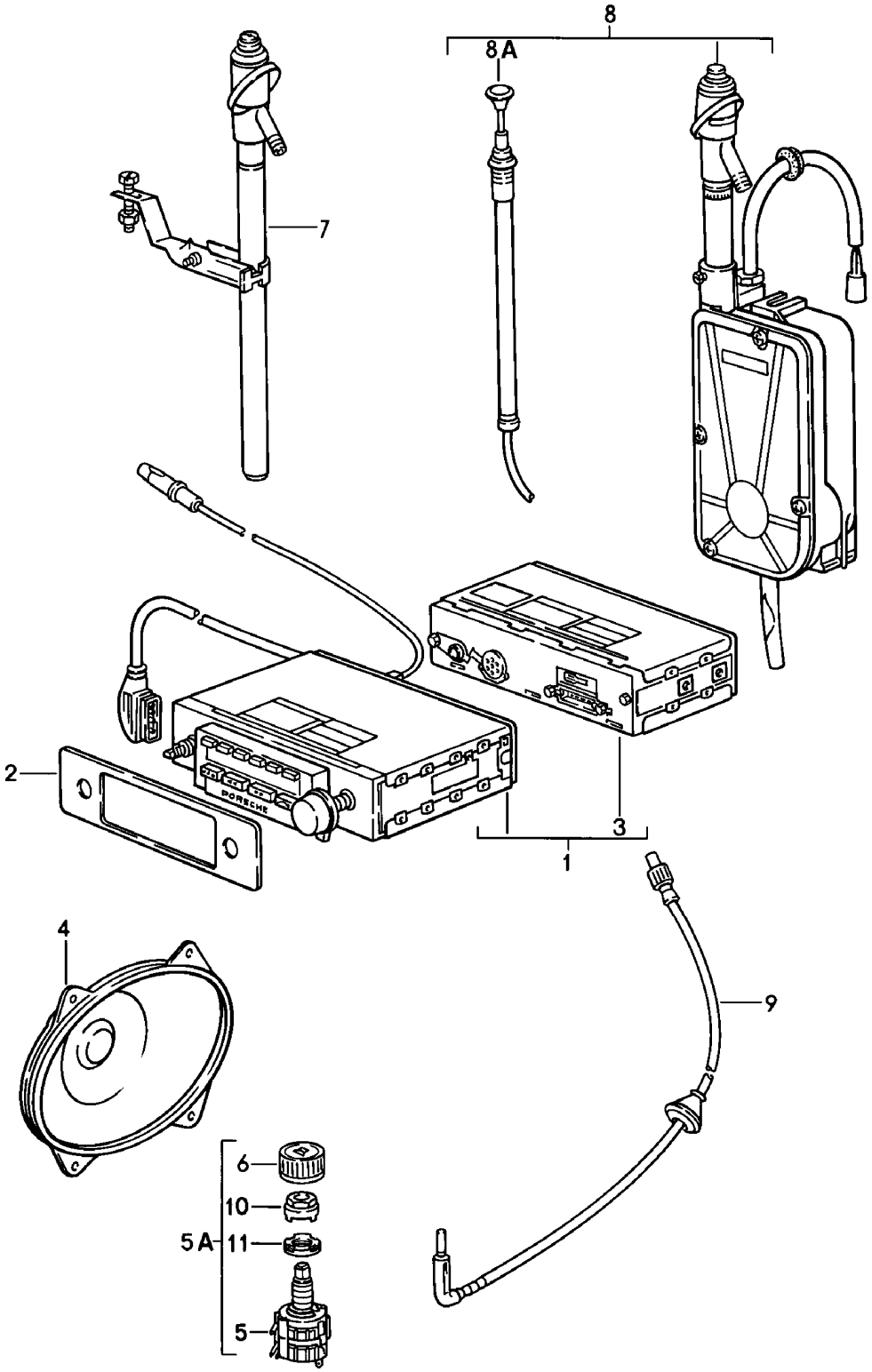

Model	Year	MG	SG	Illustration	Restrictions	UPD	7:39	27.10.2023
928	1978	0	03	003-000		738		

Pos	Part Number	Description	Remark	Qty	Model
		Radio unit with installation parts Additional accessories in the classic catalogue (Model: CLA)			
1	928 645 101 00	radio Porsche STEREO TYP DE		1	M 351
(1)	928 645 102 00	radio Porsche CR STEREO TYP RW		1	
(1)	928 645 105 01	radio BAMBERG Display unit SUPER ARIMAT	digital	1	"D..","CH.", "A.."
(2)	928 645 911 00	Trim for Radio unit (928.645.105.01)		1	
(1)	928 645 108 01	radio BAMBERG Display unit	digital	1	
(2)	928 645 913 00	Trim for Radio unit (928 645 108 01)		1	
2	928 645 151 00	Trim D >> - MJ 1979		1	
3	911 645 165 01	Receiver unit D >> - MJ 1979		1	
4	928 645 401 00	Loudspeaker 4 OHM 5 WATT D >> - MJ 1979	front	2	
-	928 555 119 02	Seal Loudspeaker		2	
-	900 076 056 02	Hexagon nut D >> - MJ 1979		8	
-	999 591 461 01	Securing clip D >> - MJ 1979		8	
-	900 151 019 02	Washer D >> - MJ 1979		8	
(4)	928 645 402 00	Loudspeaker 4 OHM 15 WATT D - MJ 1980>>	front	2	

Model	Year	MG	SG	Illustration	Restrictions	UPD	7:39	27.10.2023
928	1978	0	03	003-000		738		

Pos	Part Number	Description	Remark	Qty	Model
-	N 011 004 6	Hexagon nut D - MJ 1980>> Discontinued part		8	
-	N 011 004 G	Nut D - MJ 1980>>		8	
-	900 027 011 01	spring ring B 4 D - MJ 1980>>		8	
-	900 151 001 02	Washer D - MJ 1980>>		8	
(4)	928 645 401 00	Loudspeaker 4 OHM 5 WATT D >> - MJ 1979	rear	2	
-	999 591 461 01	Securing clip D >> - MJ 1979		8	
-	900 025 001 02	Washer D >> - MJ 1979		8	
-	900 076 056 02	Hexagon nut D >> - MJ 1979		8	
4	928 645 403 00	Loudspeaker 4 OHM 25 WATT D - MJ 1980>>	rear	2	
-	N 011 004 6	Hexagon nut D - MJ 1980>> Discontinued part		8	
-	N 011 004 G	Nut D - MJ 1980>>		8	
-	900 027 011 01	spring ring B 4 D - MJ 1980>>		8	
-	900 151 001 02	Washer D - MJ 1980>>		8	
5	928 645 153 00	blending switch		1	
5A	928 645 153 00	blending switch Discontinued part		1	
6	928 645 154 01	Rot. knob blending switch		1	
7	928 645 030 00	Aerial D >> - MJ 1981	manual	1	
8	928 645 035 00	Aerial D >> - MJ 1979		1	
(8)	928 645 035 01	Aerial D - MJ 1980>>		1	

Model	Year	MG	SG	Illustration	Restrictions	UPD	7:39	27.10.2023
928	1978	0	03	003-000		738		

Pos	Part Number	Description	Remark	Qty	Model
8A	477 035 513	rod-type aerial for vehicles with automatic aerial		1	
9	928 645 031 00	Aerial cable for		1	
-	928 645 121 01	Installation kit D >> - MJ 1979		1	
-	928 645 121 02	Installation kit D - MJ 1980>>		1	
-	928 645 901 01	suppression kit		1	
-	928 645 901 01	suppression kit for Radio unit PORSCHE CR		1	
-	999 619 138 00	interference suppression coil for Radio unit BAMBERG		1	
-		Amplifiers		X	
-	928 645 405 01	2-channel amplifier (stereo amplifier)		1	
5	928 645 153 02	blending switch		1	
6	928 645 154 01	Rot. knob blending switch		1	
-	999 619 140 00	choke for Battery		1	
-	928 645 077 01	Bracket		2	
-	900 028 007 02	Spring washer		2	
-	900 143 026 02	oval head panel screw 4,8 X 13		2	
-		Fasteners blending switch			
6	928 645 154 01	Rot. knob		1	
10	928 645 161 00	Rosette		1	
11	911 645 130 00	Nut		1	

Model	Year	MG	SG	Illustration	Restrictions	UPD	7:40	27.10.2023
928	1978	0	03	003-001		738		

Pos	Part Number	Description	Remark	Qty	Model
		Radio unit Navigation system with installation parts Additional accessories in the classic catalogue (Model: CLA)			
-	**911 645 190 00**	**radio Navigation system with: inscription Porsche**		**1**	
-	**911 645 191 00**	**radio Navigation system with: TMC with: inscription Porsche**		**1**	
-	**911 645 192 00**	**radio Navigation system with: TMC without: inscription Porsche**		**1**	
-	**911 645 195 00**	**Trim for Radio unit Navigation system with: inscription Porsche**		**1**	

Model	Year	MG	SG	Illustration	Restrictions	UPD	7:40	27.10.2023
928	1978	0	04	004-000		738		

FARBNUMMER
COLOUR NUMBER
NUMERO DE COULEUR
NUMERO COLORE
NUMERO DE COLOR

80K 9 2
GUARDS RED
INDISCHROT
G1

FARBBENENNUNG
COLOUR
COULEUR
COLORE
COLOR

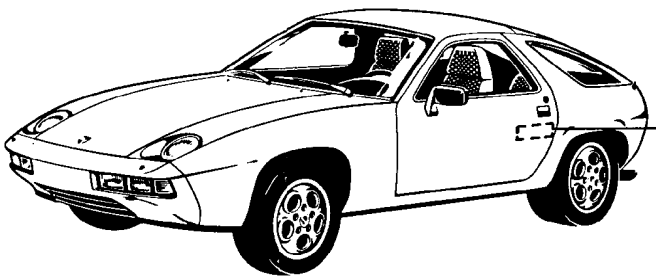

Model	Year	MG	SG	Illustration	Restrictions	UPD	7:40	27.10.2023
928	1978	0	04	004-000		738		

Pos	Part Number	Description	Remark	Qty	Model
		Paints **Pre-materials**			
-	911 096 050 00	2k-filler without hardener 1 KG. GLASSIT-NON-FERRO 839-10		X	
-	911 096 051 00	2-C filler hardener 30 GR. GLASSIT 948-36 red		X	
-	911 096 052 00	1 pk base filler 1 LTR. GLASSOFIX 238-150		X	
-	911 096 053 00	2-C filler hardener 500 ML. GLASSOFIX 352-228		X	
-	911 096 054 00	1 pk base filler 1 LTR. GLASSODUR 285-100 white		X	
-	911 096 055 00	2-C filler hardener 500 ML. GLASSODUR 929-28/1		X	
-	911 096 056 00	2k-anti-corrosion primer 2 LTR. GLASSOFIX 2K 934-200		X	
-	911 096 057 00	2-C filler hardener 1 LTR. GLASSOFIX 934-100		X	
-	911 096 058 00	plastic filler for flexible plastics 1 KG. GLASSODUR 995-20		X	
-	911 096 059 00	2-C filler hardener 1KG. GLASSODUR 929-13		X	
-	911 096 060 00	Thinners 1 KG. GLASSODUR 352-91		X	
-	911 096 062 00	Plastic additive 1 LTR. GLASSODUR 521-111		X	
-	911 096 063 00	Underbody protection 1 KG. GLASSOHYD 1109-		X	
-	000 043 001 00	Filler SN 90%	2 parts	X	

Model	Year	MG	SG	Illustration	Restrictions	UPD	7:40	27.10.2023
928	1978	0	04	004-000		738		

Pos	Part Number	Description	Remark	Qty	Model
-	911 095 902 60	2-pack acrylic top coat		X	
	08/77-07/82027	guards red (Porsche)			027
	08/77-07/82106	Talbot yellow			106
	08/77-07/82107	orange			107
	08/77-07/82260	green			260
	08/77-07/82273	fern green			273
	08/77-07/82274	Olive green			274
	08/77-07/82305	Arrow blue			305
	08/77-07/82408	Bitter chocolate			408
	08/77-07/82451	Mocha black			451
	08/77-07/82502	Cashmere beige			502
	08/77-07/82601	Flieder/Lilac Grey Met.			601
	08/77-07/82700	Black			700
	08/77-07/82908	Grand prix white			908
	08/77-07/8220A	Mint green			20A
	08/77-07/82182	White			182
	08/77-07/82523	Bamboo beige			523
	08/77-07/82524	Caramel			524
-	911 095 903 80	Synthetic resin top coat 1 LTR.		X	
	08/77-07/82265	Oak green metallic			265
	08/77-07/82275	pastel green			275
	08/77-07/82304	Minerva blue			304
	08/77-07/82376	Petrol blue			376
	08/77-07/82443	Brown copper			443
	08/77-07/82936	Silver metallic			936
	08/77-07/8230T	light-blue metallic			30T
	08/77-07/82463	Casablanca beige metallic			463
	08/77-07/82464	Tobacco metallic			464
	08/77-07/82708	Black metallic			708
	08/77-07/8220C	Moss green metallic			20C

Model	Year	MG	SG	Illustration	Restrictions	UPD	7:40	27.10.2023
928	1978	0	04	004-000		738		

Pos	Part Number	Description	Remark	Qty	Model
	08/77-07/8231G	Metallic blue shade			31G
	08/77-07/82474	palisander			474
	08/77-07/82895	Burgundy-metallic			895
	08/77-07/82655	Platinum-metallic			655
	08/77-07/82956	Zinc metallic			956
	08/77-07/82961	Meteor metallic			961
	08/77-07/82966	Light bronze metallic			966
-	911 096 064 00	clear paint 1 LTR. GLASSODUR-MS 923-85		X	
-	911 095 932 20	paint touch-up applicator		X	
	08/77-07/82524	Caramel			524
	08/77-07/82502	Cashmere beige			502
	08/77-07/82523	Bamboo beige			523
	08/77-07/82700	Black			700
	08/77-07/82895	Burgundy-metallic			895
	08/77-07/82908	Grand prix white			908
	08/77-07/82601	Flieder/Lilac Grey Met.			601
-	911 095 932 20	paint touch-up applicator		X	
	08/77-07/82027	guards red (Porsche)			027
	08/77-07/82106	Talbot yellow			106
	08/77-07/82182	White			182
	08/77-07/82107	orange			107
	08/77-07/8220A	Mint green			20A
	08/77-07/82260	green			260
	08/77-07/8220C	Moss green metallic			20C
	08/77-07/82265	Oak green metallic			265
	08/77-07/82273	fern green			273
	08/77-07/82274	Olive green			274
	08/77-07/82275	pastel green			275
	08/77-07/82304	Minerva blue			304
	08/77-07/82305	Arrow blue			305

Model	Year	MG	SG	Illustration	Restrictions	UPD	7:40	27.10.2023
928	1978	0	04	004-000		738		

Pos	Part Number	Description	Remark	Qty	Model
	08/77-07/82376	Petrol blue			376
	08/77-07/82408	Bitter chocolate			408
	08/77-07/82443	Brown copper			443
	08/77-07/82451	Mocha black			451
	08/77-07/82474	palisander			474
-	911 095 933 20	Paint pen set comprising: lacquer Paint		X	
	08/77-07/82275	pastel green			
	08/77-07/8230T	light-blue metallic			
	08/77-07/82304	Minerva blue			
	08/77-07/82376	Petrol blue			
	08/77-07/82463	Casablanca beige metallic			
	08/77-07/82464	Tobacco metallic			
	08/77-07/82474	palisander			
	08/77-07/82655	Platinum-metallic			
	08/77-07/82708	Black metallic			
	08/77-07/82895	Burgundy-metallic			
	08/77-07/82956	Zinc metallic			
	08/77-07/82961	Meteor metallic			
	08/77-07/82966	Light bronze metallic			
-	911 095 933 20	Paint pen set comprising: lacquer Paint		X	
	08/77-07/8220C	Moss green metallic			
	08/77-07/82265	Oak green metallic			

Model	Year	MG	SG	Illustration	Restrictions	UPD	7:40	27.10.2023
928	1978	0	05	005-000		738		

Pos	Part Number	Description	Remark	Qty	Model
		Adhesive and sealant Additional accessories in the classic catalogue (Model: CLA)			
-	**928 101 921 00**	**Locking fluid LOCTITE 270**	**high-strength 10ml**	**X**	
-	**000 043 010 00**	**sealant 1 tube**	**50ml**	**X**	
-	**000 043 051 00**	**adhesive Discontinued part**	**50ml LOCTITE 312**	**X**	
-	**000 043 306 46**	**adhesive**	**50ml LOCTITE 312**	**X**	
-	**000 043 202 65**	**primer AKTIVATOR NF Glass metal adhesive Discontinued part**	**180ml LOCTITE 736 Ceramics**	**X**	
-	**000 043 306 39**	**activator AKTIVATOR NF Glass metal adhesive**	**180ml LOCTITE 736 Ceramics**	**X**	
-	**000 043 004 00**	**Assembly paste**	**1 KG**	**X**	
-	**000 043 004 00**	**Assembly paste OPTIMOLY - HT**	**90 gram**	**X**	
-	**999 917 725 00**	**grease Drive shaft**	**100 gram**	**X**	

Model	Year	MG	SG	Illustration	Restrictions	UPD	7:40	27.10.2023
928	1978	0	05	005-003		738		

1

2

3

4

5

6

7

8

9

Model	Year	MG	SG	Illustration	Restrictions	UPD	7:40	27.10.2023
928	1978	0	05	005-003		738		

Pos	Part Number	Description	Remark	Qty	Model
		Operating instructions Care pass	928		
1	WKD 467 610	Operating instructions Care pass 928/78	german	1	
-	WKD 467 620	Operating instructions Care pass 928/78	english	1	
-	WKD 467 621	Operating instructions Care pass 928/78	english-usa	1	
-	WKD 467 640	Operating instructions 928/78	italian	1	
2	WKD 468 310	Operating instructions Care pass 928/79	german	1	
-	WKD 468 320	Operating instructions Care pass 928/79	english	1	
-	WKD 468 321	Operating instructions Care pass 928/79	english-usa	1	
-	WKD 468 330	Operating instructions 928/79	french	1	
-	WKD 468 340	Operating instructions 928/79	italian	1	
3	WKD 468 910	Operating instructions Care pass 928/80	german	1	
-	WKD 468 920	Operating instructions Care pass 928/80	english	1	
-	WKD 468 921	Operating instructions 928/80	english-usa	1	
-	WKD 468 930	Operating instructions 928/80	french	1	
-	WKD 468 940	Operating instructions 928/80	italian	1	
4	WKD 469 310	Operating instructions Care pass 928 S/80	german	1	
-	WKD 469 320	Operating instructions Care pass 928 S/80	english	1	

Model	Year	MG	SG	Illustration	Restrictions	UPD	7:40	27.10.2023
928	1978	0	05	005-003		738		

Pos	Part Number	Description	Remark	Qty	Model
-	WKD 469 330	Operating instructions 928 S/80	french	1	
5	WKD 469 910	Operating instructions Care pass 928/81	german	1	
-	WKD 469 920	Operating instructions Care pass 928/81	english	1	
-	WKD 469 921	Operating instructions Care pass 928/81	english-usa	1	
-	WKD 469 930	Operating instructions 928/81	french	1	
-	WKD 469 931	Operating instructions Care pass 928/81		1	
-	WKD 469 940	Operating instructions 928/81	italian	1	
6	WKD 470 010	Operating instructions Care pass 928 S/81	german	1	
-	WKD 470 020	Operating instructions Care pass 928 S/81	english	1	
-	WKD 470 030	Operating instructions 928 S/81	french	1	
-	WKD 470 040	Operating instructions 928 S/81	italian	1	
7	WKD 470 710	Operating instructions Care pass 928, 928S/82	german	1	
-	WKD 470 720	Operating instructions Care pass 928,928S/82	english	1	
8	WKD 471 810	Operating instructions Care pass 928/83	german	1	
-	WKD 471 820	Operating instructions Care pass 928/83	english	1	
-	WKD 471 821	Operating instructions Care pass 928/83	english-usa	1	
-	WKD 471 830	Operating instructions 928/83	french	1	

Model	Year	MG	SG	Illustration	Restrictions	UPD	7:40	27.10.2023
928	1978	0	05	005-003		738		

Pos	Part Number	Description	Remark	Qty	Model
-	WKD 471 840	Operating instructions Care pass 928/83	italian	1	
-	WKD 471 850	Operating instructions Care pass 928/83	spanish	1	
9	WKD 472 610	Operating instructions 928 S/84	german	1	
-	WKD 472 620	Operating instructions Care pass 928 S/84	english	1	
-	WKD 472 621	Operating instructions 928 S/84	english-usa	1	
-	WKD 472 630	Operating instructions Care pass 928 S/84	french	1	
-	WKD 472 650	Operating instructions Care pass 928 S/84	spanish	1	
-	WKD 472 640	Operating instructions 928 S/84	italian	1	

Model	Year	MG	SG	Illustration	Restrictions	UPD	7:41	27.10.2023
928	1978	0	05	005-005		738		

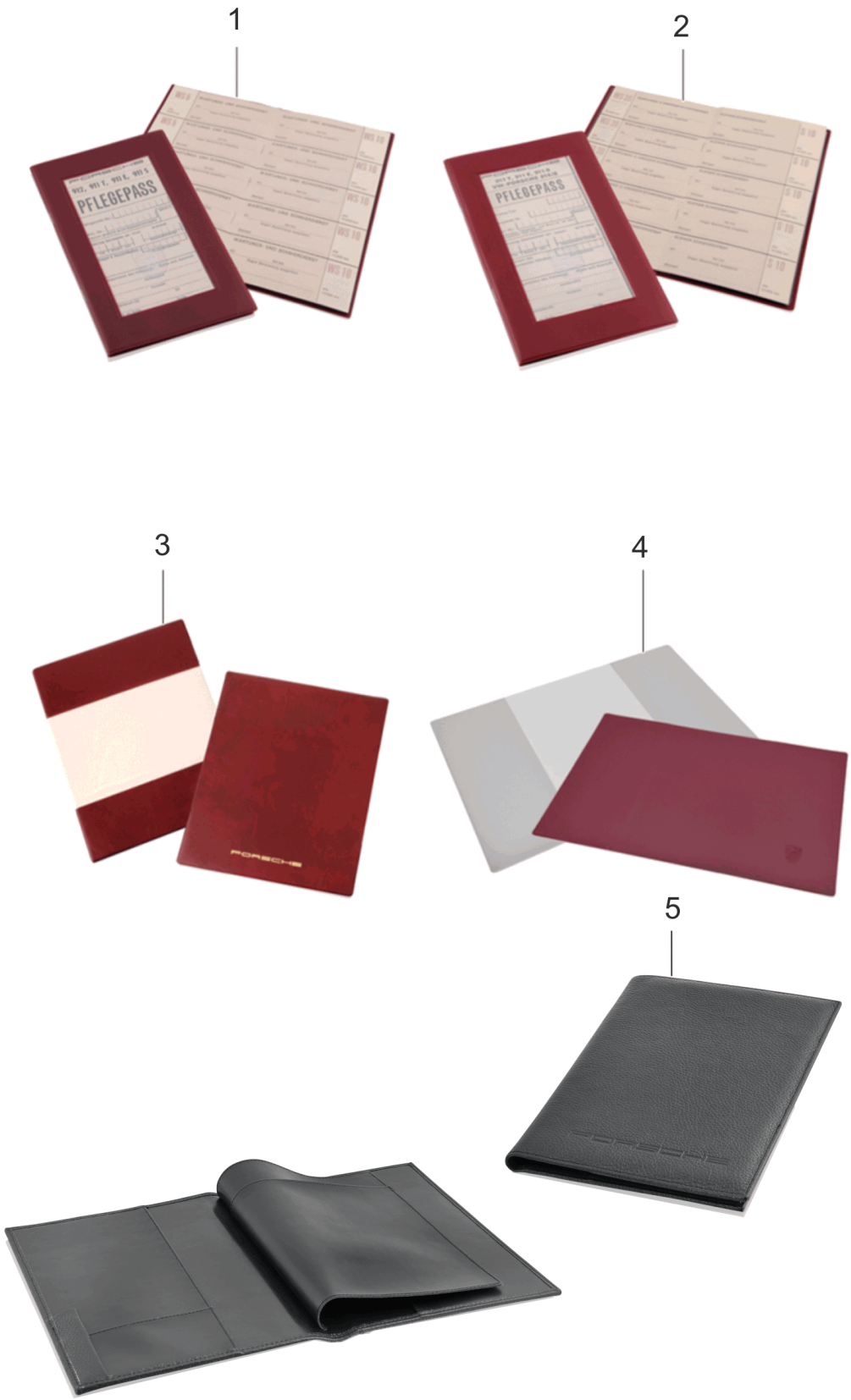

Model	Year	MG	SG	Illustration	Restrictions	UPD	7:41	27.10.2023
928	1978	0	05	005-005		738		

Pos	Part Number	Description	Remark	Qty	Model
		Vehicle wallet **Care pass**			
1	**WKD 431 510 00**	**Care pass**	**german**	**1**	**911T,E,S** **912**
(1)	**WKD 431 520 00**	**Care pass**	**english**	**1**	**911T,E,S** **912**
2	**WKD 431 510 10**	**Care pass**	**german**	**1**	**911T,E,S** **914/6**
(2)	**WKD 431 520 10**	**Care pass**	**english**	**1**	**911T,E,S** **914/6**
3	**WKD 485 510 00**	**Vehicle wallet** **Porsche** **inscription** **gold** **D - MJ 1977>> - MJ 1982**		**1**	**911,928** **914,924,944**
4	**WKD 480 510 00**	**Vehicle wallet** **Porsche** **Porsche crest** **D - MJ 1977>> - MJ 1982**	**Embossed**	**1**	**911,928** **914,924,944**
5	**PCG 480 500 00**	**Document wallet** **Leather**		**1**	

Model	Year	MG	SG	Illustration	Restrictions	UPD	7:41	27.10.2023
928	1978	0	05	005-010		738		

1

Model	Year	MG	SG	Illustration	Restrictions	UPD	7:41	27.10.2023
928	1978	0	05	005-010		738		

Pos	Part Number	Description	Remark	Qty	Model
		Charger Porsche Classic	**6V/12V (5A)**		
1	**PCG 356 611 70**	**Charger 6 V/12 V for**	**Europe Russia LEAD-ACID OF WET MF VRLA AGM GEL**	**1**	
1	**PCG 356 611 72**	**Charger 6 V/12 V for**	**Great Britain LEAD-ACID OF WET MF VRLA AGM GEL**	**1**	
1	**PCG 356 611 74**	**Charger 6 V/12 V for**	**Japan LEAD-ACID OF WET MF VRLA AGM GEL**	**1**	

Model	Year	MG	SG	Illustration	Restrictions	UPD	7:41	27.10.2023
928	1978	0	05	005-015		738		

Model	Year	MG	SG	Illustration	Restrictions	UPD	7:41	27.10.2023
928	1978	0	05	005-015		738		

Pos	Part Number	Description	Remark	Qty	Model
		Glove			
1	PCG 911 008 00	1 pair assembly gloves Size 8		1	
1	PCG 911 009 00	1 pair assembly gloves Size 9		1	
1	PCG 911 010 00	1 pair assembly gloves Size 10		1	
1	PCG 911 011 A	1 pair assembly gloves Size 11		1	
2	PCG 044 620 00	Pannier, size L	4 pcs	1	
2	PCG 044 621 00	Pannier, size XL	4 pcs	1	
2	PCG 044 622 00	XXL pannier	4 pcs	1	
3	PCG 044 610 00	Protector Porsche Classic	4 pcs	1	

Model	Year	MG	SG	Illustration	Restrictions	UPD	7:41	27.10.2023
928	1978	0	05	005-020		738		

1

2

3

Model	Year	MG	SG	Illustration	Restrictions	UPD	7:41	27.10.2023
928	1978	0	05	005-020		738		

Pos	Part Number	Description	Remark	Qty	Model
		Tool kits			
1	**PCG 195 011 00**	**Open-end spanner set with tool kit SW: 8,9,10,11,12,13,14,15,17, 19**	**5-part**	**1**	
2	**PCG 191 002 01**	**Plastic-handled screwdr. set with tool kit Tool set**	**5-part plastic**	**1**	
3	**PCG 191 002 00**	**Wooden screwdriver set with tool kit Tool set**	**5-part wood**	**1**	